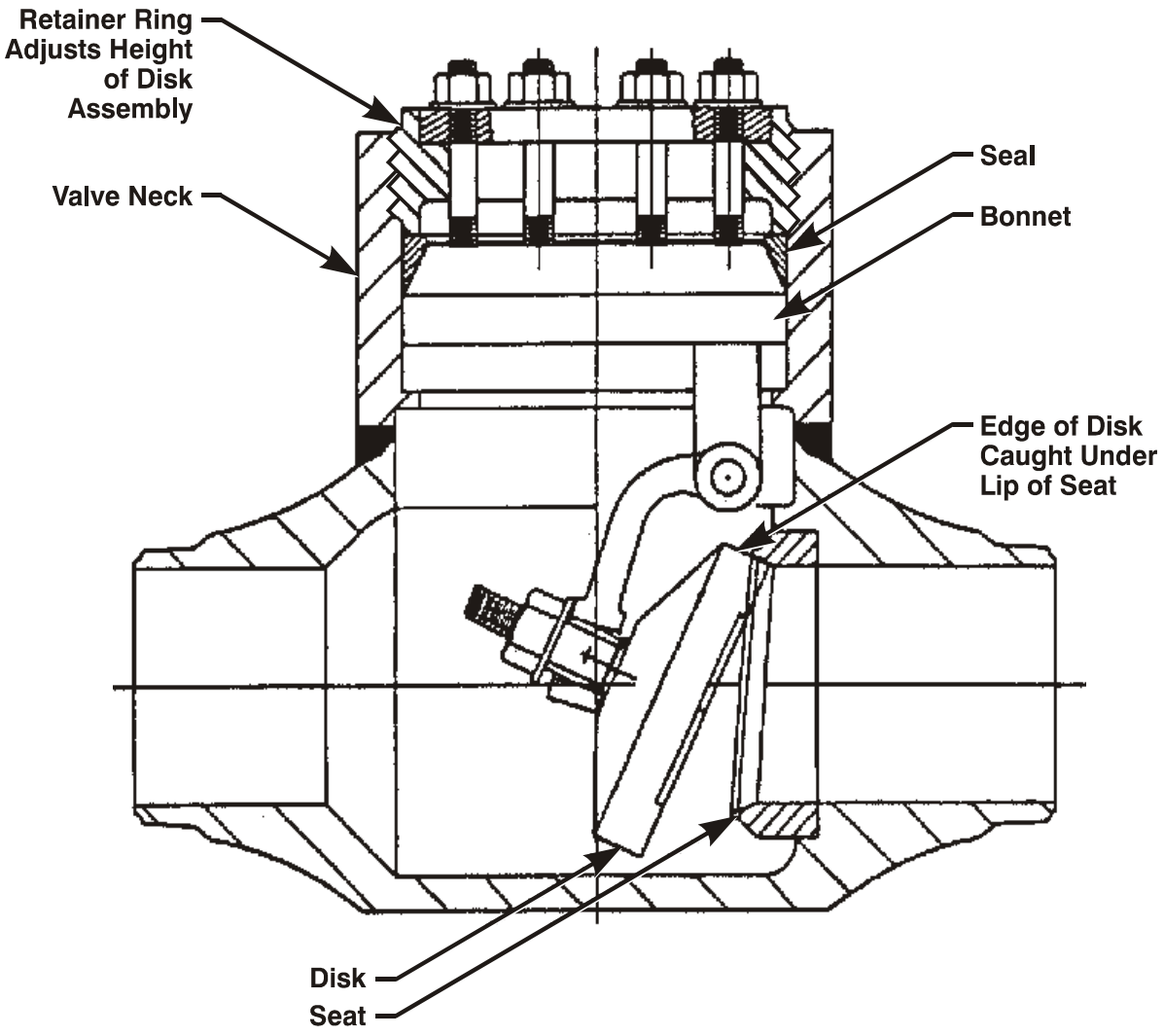

Figure 2. Borg-Warner Check Valve Shown with Disk Jammed in Open Position