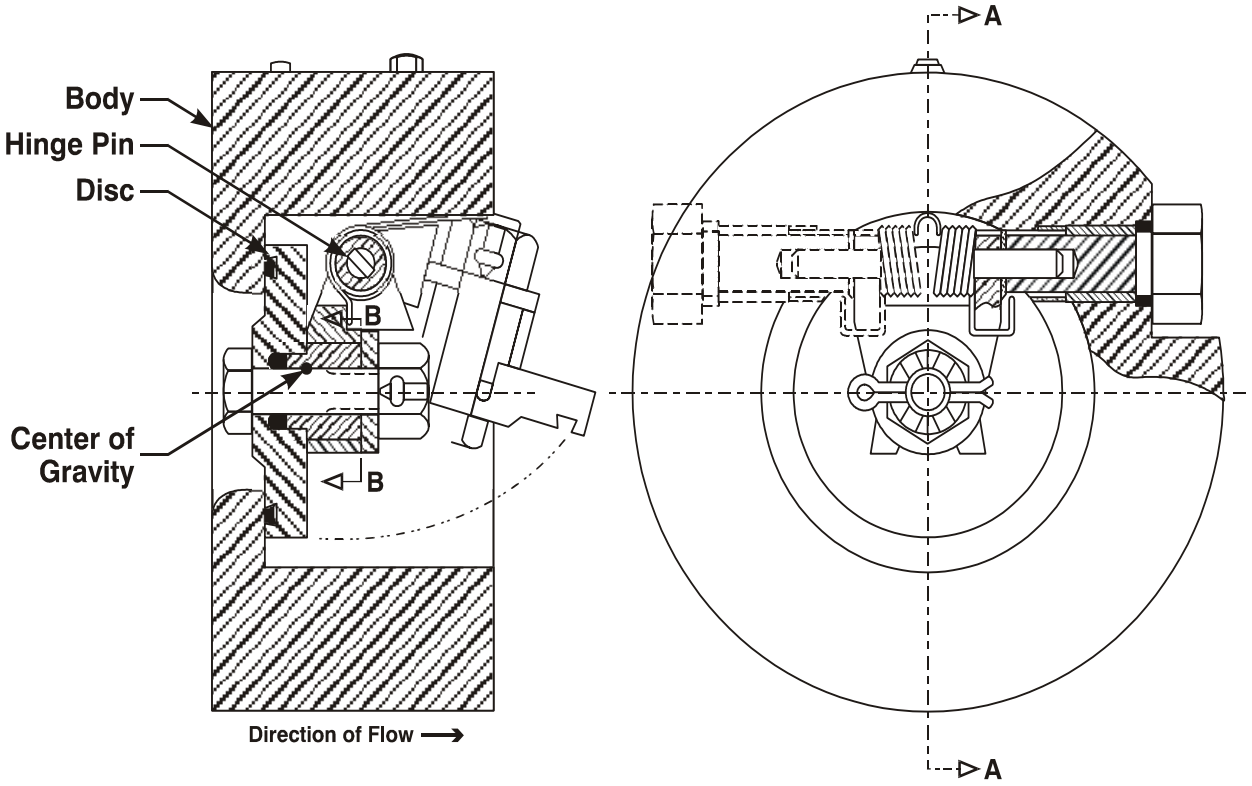

Figure 1. Anderson Greenwood Check Valve