Official Transcript of Proceedings

NUCLEAR REGULATORY COMMISSION

Title: Advisory Committee on Reactor Safeguards Reliability and Probabilistic Risk Assessment

Docket Number: (n/a)

Location: Rockville, Maryland

Date: Tuesday, September 20, 2011

Work Order No.: NRC-1152 Pages 1-191

NEAL R. GROSS AND CO., INC.
Court Reporters and Transcribers
1323 Rhode Island Avenue, N.W.
Washington, D.C. 20005
(202) 234-4433

UNITED STATES OF AMERICA

NUCLEAR REGULATORY COMMISSION

+ + + + +

ADVISORY COMMITTEE ON REACTOR SAFEGUARDS

(ACRS)

+ + + + +

SUBCOMMITTEE ON RELIABILITY AND

PROBABILISTIC RISK ASSESSMENT

+ + + + +

TUESDAY

SEPTEMBER 20, 2011

+ + + + +

ROCKVILLE, MARYLAND

+ + + + +

The Subcommittee met at the Nuclear Regulatory Commission, Two White Flint North, Room T2B1, 11545 Rockville Pike, at 8:30 a.m., John Stetkar, Chairman, presiding.

SUBCOMMITTEE MEMBERS PRESENT:

JOHN W. STETKAR, Chairman

SAID ABDEL-KHALIK

DENNIS C. BLEY

JOY REMPE

WILLIAM J. SHACK

GORDON R. SKILLMAN

NRC STAFF PRESENT:

JOHN LAI, Designated Federal Official

CHARLES ADER

DONALD DUBE

ERIC POWELL

STEPHEN DINSMORE

BOB TJADER

ANDREW HOWE

ALSO PRESENT:

PATRICK O'REGAN

BIFF BRADLEY

RUSS BYWATER

A-G-E-N-D-A

Opening Remarks 4

Introduction and Staff's Approach to Respond to Commission SRM 5

Tabletop Exercises of Risk-Informed Inservice Inspection of Piping 24

Tabletop Exercises of Risk-Informed Technical Specifications Initiative (RITS) 5b 66

"Substantial Increase" in Probability and Public Consequences of Ex-Vessel Severe Accidents per Section VIII.B.5.c of Part 52 Appendices 97

Tabletop Exercises of Risk-Informed Technical Specifications Initiative (RITS) 4b and Maintenance Rule 50.65(a)(4) 129

Stakeholder Perspectives on Insights from Tabletop Exercises 168

NEI Presentation 175

Public Comments 187

Member Discussion 188

P R O C E E D I N G S

8:30 a.m.

CHAIR STETKAR: The meeting will now come to order. This is a meeting of the Reliability and PRA Subcommittee. I'm John Stetkar, chairman of the subcommittee meeting. ACRS members in attendance are Said Abdel-Khalik, Dick Skillman, Dennis Bley, Bill Shack and Joy Rempe. John Lai of the ACRS staff is the designated federal official for this meeting. The subcommittee will hear the staff's proposed approach, progress made to date and future plans to address the Commission's Staff Requirements Memorandum of March 2nd, 2011, on SECY-10-0121 regarding risk-informed regulatory guidance for new reactors. We'll hear presentations from the NRC staff and an NEI representative. There will be a phone bridge line. To preclude interruption to the meeting the phone will be placed in a listen-in mode during the presentations and committee discussions. We've received no written comments or requests for time to make oral statements from members of the public regarding today's meeting. The entire meeting will be open to public attendance.

The subcommittee will gather information, analyze relevant issues and facts and formulate proposed positions and actions as appropriate for

deliberation by the full committee. The rules for participation in today's meeting have been announced as part of the notice of this meeting previously published in the Federal Register. A transcript of the meeting is being kept and will be made available as stated in the Federal Register notice. Therefore, we request the participants in this meeting use the microphones located throughout the meeting room when addressing the subcommittee. The participants should first identify themselves and speak with sufficient clarity and volume so that they may be readily heard. We will now proceed with the meeting and I call upon Charles Ader to begin the presentations. Charlie?

MR. ADER: Actually I was just going to turn it over to Don. I have no opening.

CHAIR STETKAR: Well, that's good, we're going to finish early.

(Laughter)

MR. ADER: Take it away, Don.

MR. DUBE: Thank you, John and members of the subcommittee. I want to acknowledge Eric Powell has really done a lot on project management activities as well as a lot of the risk-informed tech spec initiative 4b analyses. And also I want to acknowledge other NRO divisions and offices within the

NRC tech spec, NRR Division of Inspection of Regional Support, Division of Risk Assessment and Office of Research. It's been a collaborative effort. And also we've had extensive support of stakeholders, particularly new reactor vendors. Consultants and licensees have spent a lot of time and did a lot of calculations and I think you've seen some of those and we'll be presenting some of that material. So, it's been a very busy six months but in many ways it's been rewarding in that a lot of interesting insights have come about. So we'll be sharing a portion of that, those insights with you this morning and afternoon. So again, thank you for this opportunity.

So as John mentioned it's a progress report. We discussed a few months ago whether we should drop all this material on you later, I mean earlier next year when we expect to have a draft commission paper on the options and decided that there's just so much material that we will have this interim progress report. But you'll see us again in a few months when we start getting close to options. So this is an informational meeting as I said to present the material. So for those of you who are not familiar we'll provide some background on the commission paper and the staff requirements

memorandum. We'll go through the tabletop exercises through end of July. We'll talk about the next steps and there's opportunity for stakeholder inputs, although I think right now NEI has prepared remarks.

So over the next four or five slides I tend to go a little bit fast in the sense that this historical will bring everybody up to speed. There's a number of risk-informed applications for new reactors that are proposed or pending. There's an Electric Power Research Institute research program and risk-informed inservice inspection of piping, it's a follow-on to the program for current reactors. Comanche Peak 3 and 4 combined license application has interest in risk-informed tech spec 4b and 5b and it's under review by the staff right now and there's been interest in 50.69. That's the categorization of structure systems and components. The staff issued a white paper over two years ago that expressed some concerns, especially on the reactor oversight process. We will not discuss reactor oversight process today but we do have a tabletop coming up in two weeks so that'll be pretty interesting. There was a commission paper about a year ago with options for a commission vote. The commission briefing was held in October of last year and there was a staff requirements

memorandum in March of this year.

MEMBER BLEY: Are you going to tell us anything about that tabletop and what you anticipate? How it's planned?

MR. DUBE: We can.

MEMBER BLEY: Okay, thanks.

MR. DUBE: If we can remember. The short-term memory is challenging.

MEMBER SHACK: The maintenance rule is one that every new reactor's going to have to live with.

MR. DUBE: Yes.

MEMBER SHACK: And yet it doesn't seem to have made your tabletop.

MR. DUBE: Yes, it did, sir.

MEMBER SHACK: It did?

MR. DUBE: It's there.

MR. POWELL: It's part of RITS 4b.

MEMBER SHACK: Oh it's, okay.

MR. POWELL: We did it as part of that tabletop.

MEMBER SHACK: The (a)(4).

MR. DUBE: RITS 4b completion times and maintenance rule 50.65(a)(4).

MEMBER SHACK: (a)(4) but not the rest of the maintenance rule.

MR. DUBE: No. So this has to do with me using risk assessment of some sort to evaluate changes in configuration.

MEMBER SHACK: I was just thinking of the discussion we had on D-RAP. I mean, you still have what structure system components are subject to the maintenance rule which is going to have to be --

MR. DUBE: Addressed.

MEMBER SHACK: -- addressed.

MR. DUBE: Yes. So, very briefly, the commission paper of a year ago, we discussed the change processes and current guidance. Commission's expectations and some policy papers and where Part 52 regulations differ from current fleet. We discussed issues related to changes to licensing basis and the reactor oversight process. We discussed interactions with stakeholders and some options and staff recommendations. There were three options that we proposed. One was treat new reactors the same as current fleet. We called that status quo. Second was look at enhancements to the existing guidance. This is what the staff recommended. And the third was a little more radical which was develop actually lower numeric thresholds for new reactors.

So the commission came out with an SRM in

March which was a hybrid of options 1 and 2 which was basically continue the existing risk-informed framework but do these tabletop exercises to test the guidance, kind of like a stress test I guess, to see if there were any gaps in the existing guidance and what changes if any we might propose. But the commission did issue some pretty firm statements. They reaffirmed the existing safety goals, safety performance expectations, the subsidiary risk goals and associated risk guidance, the key principles in Reg Guide 1.174 as well as things like any change in risk should be small, maintain defense-in-depth, safety margin and so forth. And in fact the commission even came out and said they reaffirmed the quantitative metrics. So this kind of put a firm boundary around the tabletop exercises if you will. We tried to live within those boundaries as much as possible.

The commission stated that they expected advanced technologies will result in enhanced margins of safety and as a minimum new reactors have the same degree of protection of the public and environment as the current fleet. They did state finally that the new reactors with these enhanced margins and safety features should have greater operational flexibility

than current reactors. So they said while they have this additional margin because the risk profiles are lower unless we demonstrated significant gaps that new reactors should be able to use this margin for flexibility in operation.

So the key deliverables in the SRM were a brochure summarizing the commission policies and decisions on new reactor performance. You haven't seen this but there's a draft and it's going through concurrence and it's pretty interesting. It will summarize in layman's terms how the new reactor fleet differ from the current reactors in terms of the risk profiles and the expectations and some of the change processes, how they differ. Guidance on 50.59-like process for new reactors under Part 52. That's the subject of one of the agenda items today. Tabletops specifically on risk-managed tech specs, 50.69 and the ROP were called out. And we'll do these except for the 50.69 didn't make the cutoff but we have had that tabletop already.

CHAIR STETKAR: You have had the 50.69 tabletop?

MR. DUBE: Yes.

CHAIR STETKAR: Oh, okay. Good.

MR. DUBE: We had that in mid-August,

early August. And then a progress report every six months, so we had a commission TA brief in mid-August. There will be another one in September. And then the real big deliverable commission paper with specific recommendations by June 2012. We've actually targeted end of May.

CHAIR STETKAR: Don, was the 50.69, it was done with the new reactor models?

MR. DUBE: Well, we didn't really do much in the way of quantitative analysis.

CHAIR STETKAR: Yes, that's what I was going to ask. You did though with the other ones. In terms of what Bill Shack raised of the written is for the passive designs or the D-RAP list for the active designs. You didn't do anything in terms of trying to see how?

MR. DUBE: Well, some reactor vendors, AREVA in particular, did do some scoping calculations for I believe an AP -- well, they didn't say who it was, but a passive plant and an active plant. And at this time we can -- some prepared remarks but at the time we could talk about it later. And one of the key participants, Pat O'Regan, who's with Electric Power Research Institute supported that. So you know, we could give some discussion later.

CHAIR STETKAR: Okay.

MEMBER SKILLMAN: Don, my name is Dick Skillman. I'm a new member here and request you to go back to slide 8 please, last line. Could you give an example of what you meant by greater operational flexibility than current reactors, please?

MR. DUBE: We'll talk about this in risk-informed tech specs, but right now in the risk-informed tech specs there's guidance in terms of when one removes equipment from service there is an increase in the instantaneous Core Damage Frequency if you will. If you're a current reactor with a baseline Core Damage Frequency in the several times 10^{-5} per year for example that's typical. The amount of time that could remove equipment from service will be constrained by these staying to the incremental core damage probability whereas the current tech specs may be let's say three days or seven days. If one does a calculation they may be able to increase that to 10 or 14 days or 21 days. For the new reactor fleet with baseline core damage frequencies were more orders of magnitude lower. If you do the calculations they could have, you know, longer completion times and that's an example of providing this margin to the new reactor fleet, that gives them more flexibility to

remove the equipment from service. But what you also find is that in the new fleet, the current reactors typically have two trains of Emergency Core Cooling System and some of the access safeguards. All of the new designs pretty much, well certainly the active designs have at least three trains and often four trains. So that third and fourth train is the additional margin and the commission says it built in this extra margin, it should have more operational flexibility for online maintenance and so forth.

MEMBER SKILLMAN: Thank you. Thank you. Got it.

MR. DUBE: Okay. So on slide 10, briefly, the staff's approach was to leverage -- there was an effort underway even before the SRM on the NEI 96-07. This is guidance on the 50.59-like process and what's been decided by industry and agreed to by the staff is all of the new reactor change processes are going to be put in one new Appendix C to the NEI guidance. It's going to be like one-stop shopping if you will for the change processes for new reactors because there's additional guidance and regulations in fact for new reactors that you don't have for current reactors. So we decided to put all the change processes, everything from loss of large area due to

fires to ex-vessel severe accident change processes, all this is going to be in one appendix. That approval is under way anyway so we decided for this 50.59 process our little working group would piggyback on that effort.

CHAIR STETKAR: That's going to cover -- I guess I haven't followed that at all. That's going to cover you said everything. Everything.

MR. DUBE: One-stop shopping.

CHAIR STETKAR: Okay.

MR. DUBE: Now it may refer one to other regulations in the guidance, but everything will be in one appendix. So we're leveraging off that. The document, the brochure, the public information document is being done within the Office of New Reactors, within Charlie Ader's organization. There is an effort under way to review the APWR risk-managed tech specs so we're leveraging off that. We decided to do 50.69 and a risk-informed inservice inspection of piping early on. ISI mainly because there was consensus that I'll call it low-hanging fruit in the sense of win-win so we thought we'd start with that tabletop before we went on to some of the more challenging ones like risk-informed tech specs and ROP. So we'll talk about ISI very first thing,

although as I said, 50.69 didn't make the cutoff for this presentation today so we don't have prepared remarks but we could talk a little bit about it.

We have SPAR models for AP1000 and ABWR so we did a lot of the calculations in-house. Eric did a lot but we also had support and for the ROP we're doing a large number of calculations in-house and we're comparing the results with the reactor vendors for all our new reactor fleets have all done calculations. Not the ABWR, we did that, but certainly all the other designs, all the vendors have done a large number of calculations.

CHAIR STETKAR: I'm sorry. Do those SPAR models include internal fires, internal floods?

MR. DUBE: No.

CHAIR STETKAR: They're just --

MR. DUBE: The conventional internal events at power.

CHAIR STETKAR: Okay. Thanks.

MR. DUBE: But at least we can benchmark. But as part of the ROP and again, not a subject of today, but we requested input from all the reactor vendors on their external events that they've done so we could augment those calculations. So that'll be very interesting.

CHAIR STETKAR: Yes, it will.

MR. DUBE: So we talked ROP. For that we're using actual events and inspection findings and MSPI results from the current fleet and saying what if this happened at a new reactor or something similar. I mean, sometimes it's not a perfect match but something similar, a very similar kind of down failure, diesel generator failure and so forth and said if you had something similar for the same what they call fault exposure time, in other words it was in a failed condition, what if that occurred in the new fleet. And we're getting interesting results, surprising. And so we were instructed by the commission in the SRM to use real, you know, realistic plant modifications and configurations and not, you know, highly theoretical configurations. So that's, we tried to stay within those boundaries that the commission gave us.

We have a few items, you know, as you're familiar for licensing purposes. We use this metric called Large Release Frequency whereas everybody else in the current fleet uses Large Early Release Frequency. And in our next tabletop which is October 5th the morning session will be, okay, if the commission told us to use the same metrics for new

reactors as current reactors. That means we have to use Large Early Release Frequency for risk-informed applications. So we're going to have to propose some transitioning over. So we're going to talk about that and we'll propose to the commission several options for this transition. And then I mentioned the commission paper. So that's real fast.

This is the approximate timeline. I won't go through every little window and every diamond, but we are pretty much on schedule I would say.

CHAIR STETKAR: Don?

MR. DUBE: Yes.

CHAIR STETKAR: I may have missed it. There was one more thing from the SRM that I think requested that you determine what is a significant increase.

MR. DUBE: Yes.

CHAIR STETKAR: I didn't see that bullet here. How are you doing on that?

MR. DUBE: If we find a significant increase. You have to read the whole sentence I guess, but if we were to as a result of these exercises find that there's a large gap between current new reactors and current fleet and were to propose a new risk metric or some reason, some large

additional guidance that deviates substantially from what currently exists we would have to provide the commission with a technical basis and tell them what we thought it meant, that definition.

CHAIR STETKAR: But I mean for now you're operating under the kind of ground rules that significant would be a challenge to the existing sort of metrics that are in 1.174, right?

MR. DUBE: Yes, I mean there would --

CHAIR STETKAR: Not --

MR. DUBE: A significant decrease in the enhanced safety of the new designs.

CHAIR STETKAR: Yes. Okay.

MR. DUBE: Up until now I would say it's fair to say we have, there are some challenges but we haven't, you know, reached any final conclusions on it.

CHAIR STETKAR: Okay. I'm sure we'll hear more about that.

MR. DUBE: But you'll see a couple examples where it pushes the limit a little bit maybe. So you know, for your purposes we will start the commission paper draft and alignment meetings later this year. Hope to have a draft commission paper this timetable early next year, let's say February. You'll

get it, or ACRS will get a copy of the draft paper and then I expect we will have another, at least one subcommittee meeting.

CHAIR STETKAR: Yes, you'll want a letter on that so we probably should have a subcommittee meeting.

MR. DUBE: And so that's in that time frame. So for planning purposes you know we're looking at March, April the latest. So.

CHAIR STETKAR: And subcommittee probably in February --

MR. DUBE: I'll work with John.

CHAIR STETKAR: Yes, work with John.

MEMBER BLEY: But you're not, from what you've seen so far and what you see planned you don't see any real problem areas coming up that could throw off your plan?

MR. DUBE: Hopefully not.

MEMBER BLEY: Okay. There's nothing you're really focused on?

MR. DUBE: Hopefully not. Got to get alignment. We haven't gone through ROP. ROP will be interesting, you know. I have support from DIRS in case there's any questions on ROP.

So real quickly, before the SRM even came

out we had a tabletop on ex-vessel severe accident features and the change process and we've worked that into the discussion we had in August. We talked about the draft guidance for ex-vessel severe accident features and that will be a topic of discussion because it was a follow-on to an earlier tabletop. So you'll get to see that today.

We had a kickoff meeting in March and we had tabletops, really aggressive schedule. May 4th we did risk-informed inservice inspection of piping, we had two full days on RITS 4b and maintenance rule May 26th and June 1st. We did both topics on both days. The first day was mostly staff presentations but we had, industry gave presentations on like online risk monitoring and the, you know, (a)(4) and Eric will talk about that. On the second day, the June 1st day, all of the reactor vendors gave presentations or at least verbal discussion on their results. So that was a lot of work and so again I appreciate their participation. We did a risk-informed tech spec 5b on surveillance frequency control program. We'll talk about that. And then 50.69 and the change process for new reactors, August 9th. We had a prep meeting for tabletop preparation where we proposed these realistic scenarios for the SDP and the Significance

Determination Process for inspection findings, the mitigating systems performance index, Management Directive 8.3 which is incident investigation. We have outlined about a dozen cases, and if you look at sub-cases there's probably going to be several dozen actual calculations that are being done for the new reactor fleet. And we're better than halfway through those calcs now being done in-house with some of the external events being done by the reactor vendors. And we're going to have a half-day presentation October 5th on that.

MEMBER BLEY: Hey, Don?

MR. DUBE: Yes.

MEMBER BLEY: Your 50.59-like process makes me ask this question again. Has there been any decisions formulated about what happens when a new reactor actually becomes licensed and starts to operate? Will they fall back under Part 50 or will there be something different for the new reactors that are licensed under, that are certified under 52?

MR. DUBE: Well, good question. Again, we're putting everything in NEI 96-07 and that'll be applicable to those who will hold a combined license. They do have their own processes. It's 50.59-like in the sense that it asks the same 50.59 questions. But

you have this additional pilot regulation, pilot certification on the ex-vessel severe accident that says you know make sure that as a result of the change this is not a substantial increase in probability or probable consequences of an ex-vessel severe accident. So that part is different. The other part that's different is for new reactors the aircraft impact is a regulation, right?

MEMBER BLEY: Yes.

MR. DUBE: So that's different. As I said, there's this one-stop shopping in the NEI guidance for all the change processes.

MEMBER BLEY: Yes, I was wondering from NRC's side how that regulation is going to work because we don't have anything like 50.59 under Part 52.

MR. DUBE: Yes, you still have it, right?

MR. ADER: Yes, each certified design has its own change process and as Don says, it reads very much like 50.59.

MEMBER BLEY: Okay, that's defined in the rule itself?

MR. ADER: It's in the rule.

MEMBER BLEY: Okay.

MR. ADER: And there's two parts. There's

one that looks like 50.59, they call it 50.59-like process, and then there's the ex-vessel severe accident change process.

CHAIR STETKAR: And those are all in the rule itself.

MR. ADER: They're in each of the certified rule, certified design rules.

MEMBER BLEY: Just one last thing along that. Are they likely to belong -- to continue to belong to NRO after they start up or are they going to belong to -- since these things are covered in different rules.

MR. ADER: I'm assuming for awhile but I think we're four to five years away from that.

MEMBER BLEY: Okay. Fair enough.

MR. DUBE: And we mentioned the public communications brochure. So that's a real quick overview of where we are. Any questions up to date of the background or the path that the staff's taken? If not we can check off that agenda item and move on to risk-informed inservice inspection of piping which was the very first tabletop.

I want to emphasize that while these tabletops, the discussion of the methodology was provided and I would like to thank Electric Power

Research Institute and their contractors for a lot of this. It was not the purpose of this tabletop to propose changes to methodology necessarily. It was to say, okay, this is the methodology that's been applied to current fleet. Now to take this methodology and apply it to new reactor design, what does it mean in terms of the impact on risk? Is there gaps? Could a new reactor get away with too much or what have you? What controls and limitations are in place? And a lot of these are deterministic to make sure that there was reasonable constraints other than just, you know, delta risk. So that was the end goal. It wasn't to say, okay, we think we need to make all these changes to the current guidance. That was beyond the scope.

I'll give an overview of risk-informed ISI again, not talking about methodology. These are the key methodology and guidance documents. I'm not going to go through them all but there was a Westinghouse Owners Group approach, that's the WCAP, the EPRI approach is in that topical report, 112657. There have been some code cases, N716 streamlined approach. Again, I'm not an expert in this area but fortunately we do have EPRI representation. Pat O'Regan's very familiar in case we get into those kind of details. We've got several reg guides on the methodology 1178

and then the 1174 which is kind of the umbrella guidance. At this point new light water reactors appear to be potentially interested in applying either what's called the traditional approach or the streamlined EPRI approach. But no one at this point appears to be going in the -- using the Westinghouse Owners Group approach. So even in AP1000 plants if you were, a Westinghouse plant, appear to be headed in that direction, so.

CHAIR STETKAR: That was old Westinghouse.

MR. DUBE: That makes it easier on the staff. In addition, the staff is reviewing a topical report on PRA technical adequacy which will be applicable to the current and new light water reactors. I'm not going to talk about that here, but just for your background and information. And the staff actually has a draft SER on that topic.

So wow, this is a lot on EPRI traditional methodology. I won't do it justice, but go ahead.

CHAIR STETKAR: Just quickly before we get into the chart. You mentioned there's a topical report on PRA adequacy. Why, given the reg guides and ASME standards, why is there a need for a separate topical report on? Does it focus specifically on applications?

MR. DUBE: What supporting requirements, what are the capability category for each supporting requirement. Is it capability category 1, 2, or 3, 1 being one can use a more generic approach, less detailed, category 3, more detailed. And so the thought process here is the staff will endorse a topical report with exceptions perhaps and a licensee or COL holder who is interested in applying risk-informed ISI can reference this and the staff will not have to do an in-depth PRA review.

CHAIR STETKAR: Okay, but what I missed is this is a topical report specifically on capability categories for risk-informed ISI. So if you want to do this you need capability category 2 in these areas and your capability -- I thought it was more, the way I heard it it sounded like a more generic topical report on PRA quality.

MR. DUBE: It may, you know, it may ultimately that framework may be used for let's say 50.69 or something. But one could generalize.

CHAIR STETKAR: Okay.

MR. DUBE: Right now it's just ISI.

CHAIR STETKAR: It's just ISI.

MR. DUBE: And I'm giving credit to EPRI because I copied and pasted their slide from this but

it's part of the public record. This was the first tabletop. So again, I'm not going to do it justice but one first determines what the scope is. So they may apply it to many systems or just Class 1 systems or what have you in the, or Class 1 and 2. So each licensee who wants to use the approach determines what the scope is. It can perform consequence analysis calculations and look at the potential failure mechanisms of the piping. They perform a service review which is operational experience. They segmentize the piping, do the calculations in terms of each segment of piping, what's the consequence of a pipe break, what's the potential for a pipe break. They select the elements for inspection and the methods, perform a risk assessment impact and finalize and do a continual feedback loop of performance monitoring and adjusting as they go along. That's a real quick overview. So it's nothing different and you're probably seeing risk-informed ISI.

The, so we wanted to look at this as a two-dimensional matrix. This is a busy slide but the colors have significance. On the x-axis if you will the consequence category. One uses conditional core damage probability, conditional large early release probability as a means of looking at the consequences

of particular pipes. It can be none, low, medium and high and I'll explain those numerical criteria in a minute. And then on the y-axis if you will categorize the segregation mechanisms as low, medium and high. Degradation assessment, potential assessment. Then there's partition all of the focus of points if you will into high risk evaluation, medium or low.

For the y-axis or the degradation mechanism pipe rupture potential is classified as high, medium or low. Large is flow-accelerated erosion, small are a number of degradation mechanisms everywhere from thermal fatigue to the various forms of stress corrosion, cracking. And if you really want definitions of each acronym I could give it to you but they've got big names like transgranular SCC which is this --

CHAIR STETKAR: Dr. Shack is an expert.

(Laughter)

MR. DUBE: Okay.

CHAIR STETKAR: He speaks like that.

MR. DUBE: ECSCC external chloride. Microbiologically induced or influenced corrosion, that's the MIC erosion-cavitation and so forth. And then the nine is no degradation mechanisms present. So the potential piping location, the weld locations

are categorized --

CHAIR STETKAR: Before you leave this, and I have to admit I really actually don't know much about risk-informed ISI. On this axis is there a notion of frequency involved in this axis to some extent? You know, why for example, primary water stress corrosion stress cracking, why is that a medium compared to flow-accelerated corrosion? Is it because flow-accelerated corrosion tends to progress more rapidly in the real world compared to the other corrosion mechanisms?

MR. DUBE: I think there is the notion of probability.

CHAIR STETKAR: Frequency?

MR. DUBE: Frequency, yes.

CHAIR STETKAR: Or weight or something like that.

MR. DUBE: And mechanisms for detecting this.

CHAIR STETKAR: Okay.

MEMBER SHACK: It also comes down to, I mean flow-accelerated corrosion has a way of essentially thinning the pipe in an overall thing that you don't get leak before break. Most of these cracking mechanisms generally tend to lead to leak

before break situations.

CHAIR STETKAR: Well, I'm thinking of like buried piping systems for service water that might leak but you might not really know a lot about it.

MEMBER SHACK: Even there, you know, it is a tendency towards a more global kind of degradation versus a more local kind of degradation.

CHAIR STETKAR: I was just curious because you know the two ordinates in the matrix there really don't have a notion of frequency. They're just, you know --

MEMBER SHACK: Well I think it's a frequency of rupture. I wouldn't say it's a frequency of occurrence.

CHAIR STETKAR: Well, that's --

MEMBER BLEY: It almost seems though it's a combination of likelihood with extent of --

MEMBER SHACK: Right.

CHAIR STETKAR: I was just curious what sort of thought process went into --

MR. DUBE: Well, I think Dr. Shack hit it right on the head. Yes.

CHAIR STETKAR: Okay.

MEMBER ABDEL-KHALIK: I assume this is informed by operating experience.

MR. DUBE: Yes.

MEMBER REMPE: As I was going through the material and maybe not just with piping but other components there were several examples where they talk about that they assume a component's essential and they go through some calculations and it determines like the outage time can be always. It is with your example of having four trains versus two trains that maybe the other two trains aren't needed. And is there --

MEMBER ABDEL-KHALIK: That would be risk-informed tech specs, yes.

MEMBER REMPE: Right. But I see similarities in a lot of these different examples. And is there ever a potential where you would say well, why don't we just start monitoring a fewer number of components. And do other criteria always, like the backstop or whatever they talk about criteria always kick in so that never happens?

MR. DUBE: Yes, there are a number of backstops for risk-informed ISI in the sense of a minimum number of weld locations have to be inspected regardless of what the risk tells you or what the probability tells you.

MEMBER REMPE: But the advanced reactors

never get the flexibility of just having fewer components monitored which would make things a lot simpler for everybody.

MR. DUBE: Well, we'll show an advanced one. I think there's a shifting of priorities in finding locations for inspection.

CHAIR STETKAR: They do, Joy, because RTNSS in terms of monitoring requirements RTNSS is different than safety-related. And the new reactors have a much smaller complement of safety-related equipment. RTNSS or D-RAP. You know, they still need to monitor them under the maintenance rule program but it's a little bit different than having them in the tech specs as far as safety-related. So they do get some flexibility you know.

MEMBER SHACK: Even here in the RI-ISI, I mean most of their piping is going to be down in the low condition so they're going to be hitting backstop, the deterministic backstop most of the time.

MR. DUBE: Good point. I mean, in theory the new reactors have been designed to address these right from the start.

CHAIR STETKAR: Right. Right.

MR. DUBE: So you should see, and we'll show it, I'll show a graph thanks to the EPRI again.

So on the consequence ranking one uses conditional core damage probability, that's CCDP, or conditional large early release probability with CLERP being an order of magnitude lower than CCDP. It categorizes the consequences based on, you know, order of magnitude ranges. I won't go through all the numbers but they're there.

And one looks at you know also a delta risk impact. And the interesting thing here is there's, the risk impact in terms of the theoretical change in core damage frequency, change of large early release frequencies, there's a goal acceptance criteria at the plant level and at a system level, with the system level being an order of magnitude lower and that's to ensure that no one system bears all of the risk. That's kind of a defense-in-depth mechanism in the sense that make sure that not all the risk is in the emergency core cooling system or you know, certain portions of the Class 1 piping.

MEMBER BLEY: So can you go back to page 17? And if you're going to tell me you're going to show us this with examples --

MR. DUBE: Yes.

MEMBER BLEY: -- then you can put this aside, but as I look at this I'm guessing you look at

a piece of pipe and you look at the system it's in and you decide its vulnerability to those mechanisms on the degradation mechanism category side. It might be vulnerable to more than one so you identify probably the highest one and then you do a PRA calculation to see if that pipe breaks in some fashion. I'm not sure what we would mean by some fashion. Then how can it affect or where is it likely to fall out in terms of core damage or LERF. And then you pick a spot. So you'll walk us through doing this?

MR. DUBE: Yes. I think I will. If not, remind me.

MEMBER BLEY: So coming back to where you said Bill had it right if we look at the left-hand side and think of those mechanisms, and if we think of flow full-rated corrosion which puts us in the high category are we thinking a different kind of break than we are in the medium category or the low? I would think if we were in the low category we would probably be seeing some small opening in the pipe where in that high category you'd be thinking of almost a double-ended rupture kind of thing. Is there that kind of distinguishing when you use this?

MR. DUBE: We're getting into a little bit of details that may be beyond me but I would think

that one would conservatively assume that you know a large break.

MEMBER BLEY: So any one of these categories.

MR. DUBE: Pat O'Regan's nodding yes so I'll say yes. Just be the conservative I'm assuming.

MEMBER BLEY: Okay, whether it's high, medium or low you just assume it's a complete break. Okay.

CHAIR STETKAR: Is this limited to only Class 1, Class 2?

MR. DUBE: No.

CHAIR STETKAR: No?

MR. DUBE: Could be any Class 1, 2 or 3.

CHAIR STETKAR: Could be heater drain lines out in the turbine building in principle? If you're going to say something --

MR. DUBE: Not yes or no.

CHAIR STETKAR: -- come up to the microphone.

MR. DUBE: Thank you, Pat. Appreciate it.

MR. O'REGAN: Pat O'Regan from EPRI. Most plants that have applied it have applied it to either Class 1 or Class 2 -- Class 1 and 2 piping. There were several plants that applied it to the whole plant

which would include heater drain pipes, but usually that's not done.

MEMBER SHACK: You get your biggest benefit when you apply it to systems with low and medium. So you know, you want to go to Class 1 when you get out to heater drains.

CHAIR STETKAR: I'm thinking though also in the other axis that if I bust a heater drain line or a condensate line out in the turbine building I pretty much fill up a good fraction of the turbine building basement with water which for some plant designs might be interesting.

MEMBER BLEY: I'm still having a little trouble with the left-hand side, the degradation one. The only way this makes sense to me is if in fact these are roughly measures of frequency.

MR. DUBE: They are.

MEMBER BLEY: And if they are the only thing again that kind of makes sense to me, and Bill and others may tell me this is nuts, is that the reason we might see a higher frequency for flow-accelerated corrosion is that we might get surprised on this one and the first real indication we have of it is the rupture which I think has happened in some cases where some of the others we might be giving

advanced warning of a problem so we don't actually -- we're actually limiting the frequency of those ruptures because we're probably taking some remedial action before it breaks. Is that a reasonable assumption?

MR. DUBE: I think it's a reflection of the potential for degradation and the potential to identify it before it gets to a serious condition.

MR. DINSMORE: Hi. This is Steve Dinsmore with the NRC staff. I'm going to rely on Pat to correct me if I'm wrong because I review these things and he doesn't. But I think basically the high, medium, the small, everything is assumed to lead to a large break in practice. It is frequency-related. If you know you have FAC it's more likely you're going to get a rupture there than if you just have IGSCC. If you have two or three, if you have IGSCC and PWSCC together in a segment I think there are provisions to call that high. But so you go and you figure out what relation mechanism you have and you just put it into one of those blocks. But you have to know you have FAC in order to put it in the FAC block. So it's not like it would be a surprise, it's just, it is really just frequency-related. If that answers all your questions.

MEMBER BLEY: We'll see how it plays out.

MEMBER SHACK: One of the things I'm struggling with, just to come back to, I mean, you know stainless steel piping is not subjected to FAC. I mean, you know, the mechanisms are you can look at the piping and determine whether it is in fact susceptible to a mechanism. Low-carbon stainless steels aren't susceptible to IGSCC, you know, they're not -- to PWSCC, you know. The nickel alloys behave differently so you can bin them that way. But I think it really does come down to kind of a think of it as a pipe rupture potential, high, medium and low simply because of the nature of the degradation mechanism in one case can lead to very uniform, very large amounts of degradation, FAC, before you get a leak. In all other cases, and you tend to get leaks. And so you know, it is a combination of the likelihood that it occurs and the way it behaves once it does occur.

CHAIR STETKAR: I think the only question in my mind, and this is, we're kind of veering off because this is the way the world works now and it's not really the subject of -- we need to get back on track for the tabletop but if indeed that medium category, or the y-axis categorization has a notion of likelihood or frequency or however you want to

characterize it, if something is in the medium category because we think it has a low likelihood because we inspect it and we understand the mechanisms, and then we use that medium category to justify the fact that we need to do less inspection is that not necessarily a self-fulfilling type of process? For example --

MEMBER SHACK: You're always going to detect leaks, whether you're doing your ASME ISI, you always have the leak detection. So that, you know, if your dependence is on a leak before --

CHAIR STETKAR: Yes, that's a functional, physical sort of notion.

MEMBER SHACK: So yes, you know, there's several ways to detect these things. One is with a little crystal rubbing over it, the other one is the leak. And you know, these are by and large leak-before-break type failure mechanisms in systems and so you're always dependent on that even if you're reducing your crystal-rubbing.

CHAIR STETKAR: Okay. Thanks. Sorry, Don.

MR. DUBE: No problem. Thank you for my support out there, Stephen Dinsmore. Okay, so we want to say what's been the experience with the current

reactor fleet. And through all these tabletops that was an important element which was, okay, before we even worry about new fleet what about the existing fleet. Now, these are staff sampling from past licensing submittals using the EPRI methodology. These are the actual plants, these are actual submittals. These are the, I'll call the theoretical delta core damage frequency and large early release frequency. Sometimes positive, sometimes negative, always --

MEMBER SHACK: Two significant figures.

CHAIR STETKAR: Three.

MR. DUBE: And so sometimes it's just a matter of what was the before and after. And all of these calculations, one of is comparing the current ASME Section 11 approach, eventual ISI versus the risk-informed ISI and doing I'll call it theoretical calculations. And depending where the starting point is whether it's positive or negative. These are other words for zero. When your internal events, core damage frequency is several times 10^{-5} they're other words for zero.

And so many have called risk-informed inservice inspection of piping a risk-neutral approach or application in the sense of one is really just

finding higher priority weld locations for inspection and making some shifting around, reducing burden, perhaps reducing worker exposure to radiation. But basically being, you know, for better or for worse risk-neutral, a term called risk-neutral.

Here's some additional considerations. This kind of factor in some of the deterministic backstops if you will, kind of directly/indirectly. Under Code Case -560 the number of elements to be volumetrically examined is 10 percent of the piping weld location based upon performance history. Code Case 578, risk category 1, 2 or 3, and that refers to the red regime here in that slide. The minimum number of inspection elements should be 25 percent of the total elements in that category. Risk category 4/5, inspect 10 percent. So risk category 4 and 5 are those mediums. And the Code Case N-716 identifies portions of systems that should be generically classified as high safety significance. The PRA is used to search for additional plant high safety significant segments so there's a deterministic approach. And then Section 4 of the Code Case requires that 10 percent of the HSS as well shall be selected for examination. And there's real details upon this. I'll call upon my colleagues and EPRI

representative.

Okay, so again the approach was let's compare new reactors with current reactors. And so for the purpose of these calculations it was one reactor design with active safety features and one with passive features. And right from the beginning EPRI and its contractors noted that there was more differences between BWRs and PWRs in the current fleet than between new and active passive designs. So the fact that we chose one active design plant and one passive ended up being moot in the long run but you don't know it until you know it.

CHAIR STETKAR: Did you, I've forgotten which ones you picked. Did you pick a BWR and a PWR of your active and passive?

MR. DUBE: I believe they were both PWRs, right? Both PWRs.

CHAIR STETKAR: I can look it up but I forgot.

MR. DUBE: And then the EPRI and its contractors did a sensitivity study and said well, what if the commission did tell us in the acceptance guidelines to use an order of magnitude lower thresholds for the acceptance criteria? What would it make, what difference would it make and how might it

shift things around? One real interesting observation that came about was when you go from a two train plant, so you have two trains of emergency core cooling system eventually finding their way to the reactor coolant system piping versus three and four trains that may feed a common header and that header may then branch off into the reactor coolant system loops, one of the interesting findings was there was a shift in the inspection focus to individual branch lines to these common headers because in hindsight it kind of makes sense that if you were to have a break in a common header it's a potential common cause failure of multiple trains of injection capability or in case of a feedwater line or emergency feedwater line, you know, taking out your -- one's emergency feedwater capability. It's an interesting insight from the activity.

So this is a very busy slide and on the x-axis is the consequence ranking. So this is the conditional core damage probability if you will for Class 1 welds. And when using the nomenclature remember high, medium and low from earlier slide, from this slide and from these numerical area. And on the y-axis is 100 percent and the numbers have to add up to 100 percent. So if one looks at the hashed bar

here, 68 percent high and 32 percent, that adds up to 100 percent for operating PWRs. This second bar, 74 percent and 19 and 7 should add up to 100. So for each category of plant, for the operating pressurized water reactor the columns add up to 100. For the operating BWRs the columns add up to 100. For new light water reactor because they notice so little difference between active and passive essentially combine the two.

CHAIR STETKAR: But just out of curiosity since I couldn't find it quickly do you know, you said there was an active and a passive. Were they both PWRs?

MR. DUBE: I believe so, yes. Right?

MR. O'REGAN: Yes.

CHAIR STETKAR: So you don't know whether there's the difference in the BWR/PWR if you took -- if you took a BWR versus a PWR for example.

MR. DUBE: We did not do that. But for the current fleet there's a greater difference between Bs and Ps than.

CHAIR STETKAR: But I was saying would you observe that in the new plant.

MR. DUBE: I will guess yes but I don't know.

CHAIR STETKAR: Okay.

MR. DUBE: I'll ask the EPRI representative who did many of these calculations.

MR. O'REGAN: Yes, there is difference between all the plants, it's just a question of you know relative difference. And also we only looked at several systems. If you looked at 20 systems per plant you'll see more difference.

CHAIR STETKAR: Okay. Thank you.

MR. DUBE: So let's just take one of these operating PWRS, 68 percent found their way in the high consequence category, 32 in the medium and none in the low. I won't repeat it but operating BWR and yes, what one finds is for a new light water reactor one would have only 27 percent in the high consequence category, 53 percent in the medium, 20 percent in the low. So there's a shifting from high and medium for the current fleet to medium and low. And why is that? The reason is the conditional core damage probability for the new fleet is lower because they have more trains. They'll have typically three and four trains. So given a large loss of coolant accident or some other loss of coolant accident, for example, given a pipe break conditional core damage probability is found to be lower for new reactors because the core

damage -- because they have more trains, more highly automated, less reliance on operator action and lower risk profiles. So it could be an explanation.

If one were to use acceptance criteria that was an order of magnitude lower, so in this classification of consequence if one were to lower all those numbers by an order of magnitude to the new design. Now the commission did not tell us to do -- that they were in favor of this but we're doing these calculations to support you know the proposed approach. There is a shifting back to the high and medium but not a lot, so.

So this is on the consequence portion. In the overall risk ranking, so this is now a combination of the consequence, the previous slide, and the potential for degradation. And also taking into account that again, since in theory the new reactors, the material selection for the piping has built upon 50 years, calendar years and several thousand reactor years of operating experience one would hope that one in the new reactors designed out a lot of the degradation mechanisms. So one finds a couple of things working here in one's favor, fewer degradation mechanisms and lower conditional core damage probability given a break. So one sees a little bit

more dramatic shift here. Again, the numbers for each reactor type should add up to 100. So in overall risk ranking there's 33 percent for operating PWRs in the high, 51 percent in the medium, 16 percent in the low. And when we repeat the operating boiling water reactor one finds for Class 1 welds in the new designs the purple is current acceptance criteria, very few high, 28 percent medium and the rest in the low. And even with stricter acceptance criteria it doesn't, one does not see a dramatic change. This is a little bit of shifting back to the medium but not a lot, so.

So quantitatively the numbers kind of back up what one thinks qualitatively in the sense of new reactors designed out many of the failure mechanisms in terms of the selection of materials and with three and four trains giving out an initiating event be it a steam line break, be it a break of reactor coolant system piping, the conditional core damage probability is significantly lower so there's a shifting from the medium into the low.

MEMBER BLEY: Of course in the past we've thought we've designed things out and then when we got extensive operating experience we found out some new mechanism --

MR. DUBE: You're right.

MEMBER BLEY: -- made up some of our gain.

MR. DUBE: That's a good point and that's why in this overall process there's this feedback loop of performance monitoring and adjusting. And I'll talk about that too, the ASME 10-year re-analysis. That's a good point.

CHAIR STETKAR: Don, can I ask, so the operating fleet, things are flashing faster than I can see. The operating fleet results are based on comprehensive if I can characterize them that way, comprehensive evaluations that were performed in support of the license submittals, is that right? I mean, you know, they basically looked at all of their piping. Is that?

MR. DUBE: Within the system for which they --

CHAIR STETKAR: Okay, within the system. Pat said something that kind of caught my attention. He said we only looked at a few systems.

MR. DUBE: For the purpose of this exercise.

CHAIR STETKAR: Okay. But you're drawing global conclusions based on those.

MR. DUBE: Yes.

CHAIR STETKAR: My curiosity is what was

the cross-section of those few systems. Did they only look, for example, at the reactor coolant system and connective piping, or did they also look at other Class 1 and 2 piping systems like component cooling water and so forth.

MR. DUBE: So that wouldn't be Class 1 but they did look at --

CHAIR STETKAR: Oh, it would be Class 2.

MR. DUBE: -- mitigating systems, they looked at other mitigating systems. A subset.

CHAIR STETKAR: So they did, they did look, okay, at a cross-section of things. Okay. I'm sorry, go ahead.

MR. DUBE: Go ahead.

CHAIR STETKAR: No, finish that up.

MR. DUBE: Well, that's a good point. I mean, this whole tabletop exercise I should have said it right from the beginning has been what I call inductive reasoning. Engineers tend to do very well at deductive reasoning which is I've got some criteria, some formula and I apply it to a specific situation. This whole tabletop exercise has been the reverse which is let's do as many calculations as we can realistically do given the resources and time, look at specific situations and make generalizations

about applying this. And so we've done the reverse and yes, you can't analyze everything.

CHAIR STETKAR: That's a perfectly reasonable process I think for, you know, given your charter. Although given that process it then becomes really important to understand any limitations or biases that might be inserted in that process based on the sample that you selected. That's why I was asking about the sample of whatever those systems. That's why I was asking about PWRs versus BWRs in the new plant, you know, tabletops.

MR. DUBE: Maybe the next slide will help show you specifically. So here's the delta risk calculation. Here we really show a significant figure so we'll make some of you happy. So I'll walk you through to the extent that I can. On the left-most column is the risk categorization from the previous set of slides, high, medium, low, the degradation mechanisms, thermal fatigue, stress corrosion cracking, none and none. The number of, oh and by the way, the top set of table, the top table is for an active plant and the bottom is for a passive plant. So on the third column the number of Section 11 inspections that otherwise would have been you can read the numbers, 2, 4, 34, 94. The number of risk-

informed ISI inspections, somewhat smaller, substantially smaller number. The delta, subtract one from the other, you get that column. The CCDP is the conditional core damage probability. The frequency in terms of the potential for pipe failure per weld, you see the numbers, and then the product of the two are the delta risk numbers. This just happens -- so 6.1E ^{11}, that's another number for zero.

CHAIR STETKAR: So then 9E $^{-13}$ is another number for zero.

MR. DUBE: Yes, that's it. If they left it blank the staff will come back and say well, what is it, so we're showing whatever the computer puts out. And the bottom table is for passive. And this 10^{-10} is another number for zero as well.

And one similar table was done assuming one used acceptance criteria from Reg Guide 1.174 which was an order of magnitude lower and the same result was zero and zero. So observed is the effect is risk neutral whereas with a substantial reduction in the number of inspection locations.

So these quantitative calculations were fine and they helped to inform us but the purpose of the exercise is not to just do calculations. It's to inform the staff in terms of for what, what were the

features in the guidance and what were the regulatory and programmatic controls to ensure for, when we apply this methodology to a new reactor there would not be a substantial decrease in an enhanced level of safety. So we were very interested at the end of all these exercises to identify what controls are in place.

So on the first bullet I mentioned it earlier that the guidelines on the potential core damage frequency and large early release frequency increases are imposed at the system level as well as the overall totals to ensure that no one system absorbed most of the change in risk. So that's applied to -- would be applied to new reactors the same as current reactors.

The second bullet says that there's -- one still has to inspect the minimum set of weld locations regardless of whether, what the risk levels are calculated to be. In a sense it's a determinist backstop in the sense of even if you tell me that it's low-risk you still need to do a minimum number of inspections.

MEMBER ABDEL-KHALIK: Could you conceptually explain why is it important that no one system absorb most of the change in risk? What difference does that make?

MR. DUBE: Well, what if one was uncertain about the -- all of the risk occurred in one system, and it was dominated by the PRA's calculation of what one thought the conditional core damage probability and there's no operating experience, or dominated by the degradation mechanism and again no operating experience. One would have put all of the risk in one system so it's kind of a means of treating uncertainty if you will to buy yourself at least an order of magnitude.

MEMBER ABDEL-KHALIK: Wouldn't that concern about uncertainty be still there whether the risk is distributed or?

MR. DUBE: -- but if I'm off by an order of magnitude I'm still within the acceptance guidelines within the system.

MEMBER ABDEL-KHALIK: If the reason is to somehow handle uncertainty I'm not sure that that addresses it. Because it's the same.

MR. DUBE: No. I mean, I believe because if one was off by an order of magnitude in conditional core damage probability, let's just say a guidance was 10^{-6} and I said no one system can have more than 10^{-7} I was off by an order of magnitude I still can roughly meet an acceptance guideline. If I were to put all

the level of risk in one system and I was at 10^{-6} and I was off by an order of magnitude it could be 10^{-5}, it could be an order of magnitude more than what I would allocate for the whole plant level.

MEMBER ABDEL-KHALIK: Well, the point I'm trying to make, even if the risk is distributed to many systems and you have that level of uncertainty and order of magnitude uncertainty the sum total would still be off by an order of magnitude.

MR. DUBE: Well, I'm presuming that I'm not off conditional core damage probability across all the systems and that the degradation mechanism is not the same across all the systems. I'm not putting all the eggs in one basket I guess.

CHAIR STETKAR: The way I look at it in some sense is not so much a compensation for uncertainty. There's also this notion of you'd really like to have what they call a balanced risk profile. You know, and this applies, forget ISI or anything else, that although your total core damage frequency is let's say 10^{-6} you don't want 99 percent of that core damage frequency being attributed to let's say a single initiating event or a single system failure, that you'd much prefer to see a much more balanced.

MEMBER BLEY: Why? You're not asking me.

CHAIR STETKAR: I'm not saying I'm endorsing this, I'm saying there's a notion that that's --

MEMBER BLEY: I think the notion is anchored in the kind of things Don was discussing. Otherwise there's nothing there.

CHAIR STETKAR: It's applied in a lot of other areas.

MEMBER BLEY: In practical cases it almost, it often comes about because you eliminate the big lumps. You find ways to take care of them until you get down to the point it's not practical to fix everything because all of the little pieces are contributing. There is that side of it as well.

MEMBER ABDEL-KHALIK: Is the notion of diversity buried in that?

MEMBER BLEY: It's right in the middle of it because it's the kind of thing, you have diversity of function is basically what Don was talking about. So yes, it's hidden in there.

MR. DUBE: Good question. I think it's in part to address uncertainty. But all of these things have been sort of factored into it. It's important to know that a number of programs remain in place to address degradation mechanisms regardless of the ASME

ISI such as flow-accelerated corrosion and microbiologically induced corrosion, or influenced. So even, these programs are not going to be impacted I don't believe. So a number of these programs still remain in place.

MEMBER SHACK: Of course, you could take another point of view which is if you increase or decrease the acceptance criteria by a factor of 10 you don't really increase the burden on the licensee by very much, less than 10 percent, so.

MR. DUBE: Right.

MEMBER SHACK: In this particular case it doesn't matter much either way in terms of burden or risk reduction.

MR. DUBE: Thank you. A couple more aspects. Risk category 4 which goes way back where. Excuse me. Category 4 was the medium here so it had high consequence but low degradation mechanism potential. And then later I'm going to talk about category 5 so I might as well refresh your memory now. It has low consequence but high degradation mechanism potential.

Risk category 4 in the matrix was introduced to address the unknowns with high consequence, low frequency phenomena. So even though

it has low potential degradation mechanism because of the potential high consequences a number of inspection locations are required. That's to address the unknowns with PRA in a sense. What if one was off by one category of consequence or conditional core damage probability? And the reverse was introduced, category 5, to ensure that some inspection is provided even if the consequences of certain pipe failures are identified as low. So even though the PRA said low consequence but it was, you know, a serious degradation mechanism, again, the number of inspection locations are required to address that unknown, unknown unknown.

And finally, regarding I think Dennis Bley brought it up, regarding well, over the years you find some other mechanism comes about that one hadn't foreseen when one designed a new reactor and that's true. The ISI program, risk-informed ISI program requires updating the risk rankings of the PRA calculations. It's a living program and roughly every three and one-third years one would be doing an update that's consistent with some regulations that require that the PRA be upgraded to existing standards every four years. And so there's this ongoing mechanism of feedback and update feedback and update. So it's not

a static program. And so that gave the staff a great deal of confidence.

So here's some, the preliminary results on risk-informed ISI. Appeared to be, or I could state emphatically it's risk neutral, the new active plant and new passive plant, even with sensitivity studies using more restrictive criteria were applied. Identified numerous regulatory and programmatic controls. Consensus among the participants, that includes the staff and stakeholders. Would not result in any significant decrease in enhanced safety for the new designs. There were a number of potential regulatory implementation issues identified. That wasn't the purpose of these tabletops but they were identified so they will have to be addressed. One is lack of operating experience. So the staff is working with the applicants who want to use risk-informed ISI going forward for how to address operating experience and what is that time frame before one could effectively implement risk-informed ISI in an operating, I mean at a newly operating plant. It's fair to say that a new plant could not begin right from the start. Risk-informed ISI would probably have to be phased in. They could have elements of risk-informed ISI but the notion of just going from nothing

to full speed ahead, we have to, has to be addressed. And a conventional ISI program is required for 50.55(a). It's a regulation before one implements risk-informed ISI. So for -- based on the current regulations I know there's desires to just go immediately into risk-informed ISI. Current regulations say no, it's got to be a delta from conventional ISI to risk-informed ISI so one could look at that delta. And that's it. That's a lot but --

CHAIR STETKAR: Don, when you say you can look at that delta though how do you understand what that delta buys you without much operating experience? Maybe I'm not understanding the problem very well. In other words, why, if there's a high confidence in implementing risk-informed ISI from everything that you've looked at why not early if not immediately in the operating process?

MR. DUBE: Well, some of the staff's cautious.

CHAIR STETKAR: Okay.

MEMBER SHACK: I'd say you know these are steels in water. There's no new materials here, there's no new environments. You have plenty of operating experience as far as the degradation

mechanisms go. And you're hopefully not going to get too much operating experience on the failure of the systems.

MR. DUBE: Your comments are noted.

(Laughter)

MR. DUBE: Make a note in the letter.

MEMBER SHACK: There's no letter coming out of --

MR. DUBE: In the spring. Yes, I mean there's varying degrees of thoughts on this.

MEMBER SHACK: I understand.

MR. DUBE: There's a diversity of opinion within the staff. Thank you.

CHAIR STETKAR: Why don't we, Don, before you get into the --

MR. DUBE: I think we have a break.

(Laughter)

CHAIR STETKAR: You're a step ahead of me. Let's do that. First, though, because we're going to switch gears and completely get out of the area of anything that Dr. Shack will contribute to does --

(Laughter)

CHAIR STETKAR: I'm sorry, in terms of being able to interpret really long acronyms with a lot of Cs and Ps and that sort of stuff. Seriously,

do any other members have any questions or comments on the ISI issues? Because we're going to get into a completely different area on tech spec stuff.

MEMBER SKILLMAN: Yes, I do. Dick Skillman is my name. What is the extent of the database that was used to if you will validate your risk and consequence chart? There is an awful lot of data out there as I think of the last 10-15 years. Davis-Besse's not a pipe but it's certainly a reactor coolant pressure boundary, it is clearly ISI. A number of other units have had very similar degradation mechanisms. And so I would be curious to what extent this chart has been viewed from the perspective of the practical experience that the industry has had over the last decade. One would say you know what, that fits, that fits, that fits, that was slow but it was consequential, that was very fast, very serious. So my question is to what extent does this represent real data and has it been validated.

MR. DUBE: On the consequence portion obviously it's relying on the PRA which have undergone varying degrees of review. I mean, the staff, you know, these are for the new reactor designs. Staff's reviewed these very extensively, developed our own models and -- not for all of them yet, but we do

comparisons using our existing PRA models and licensees and we'll continue to do that. So the consequence portion is being validated to a large extent but I think your question was more on the degradation mechanism. I'll give you a short answer and turn it over to the EPRI representative Pat O'Regan but they've undergone extensive validation and it's done plant by plant, system by system as part of the documentation and the licensing submittal. So if you want a lot of details on the methodology I'll turn it over to.

MEMBER BLEY: Before he starts I think just to follow up to Dick's comment is I think your question was kind of focused on the medium box and the assumption that we will probably notice degradation before it goes too far in some events that have surprised us when we didn't see it coming.

MEMBER SKILLMAN: I was focused on the whole chart with -- from the practical perspective where industry would say you know what, that makes sense because when we go back and look at the cardinal events in the last 10-15 years one could say you know what, that's pretty much on the money. So my question is one of practical application of this into the real world where the industry is saying that makes sense

and I can use risk-informed ISI for my piping inspections because it works. That was what I'm really thinking.

MR. DUBE: Yes, I mean there's nearly, I believe over half of the current fleet are implemented risk-informed ISI and so there's hundreds of years of experience right now.

MEMBER SKILLMAN: And so when there has been a failure would one say you know what, this predictive tool was pretty much on target. That's my question. Is it predicting.

MR. DUBE: I'll ask Pat and then Stephen Dinsmore if he wants to add to it based on the current fleet.

MR. O'REGAN: As Don had mentioned in a previous slide there's a performance monitoring loop in the system or in the methodology, and if you would turn to that slide right there. If you go to slide 18, Don, it has the list of the degradation mechanisms we evaluated. For each of these mechanisms there's a prescriptive set of criteria that you go through.

CHAIR STETKAR: Just step up to the mic a little bit closer.

MR. O'REGAN: Pat O'Regan from EPRI.

CHAIR STETKAR: Just, that one doesn't

pick up as well as these two, so we need you.

MR. O'REGAN: Pat O'Regan from EPRI. And I was saying for each of these mechanisms in the EPRI TR there's a prescriptive set of criteria that an analyst goes through to determine whether that mechanism is potentially operative or not. We ask what type of material, what type of water chemistry control, hot and -- mixing of hot and cold fluids, what have you. And that criteria is based upon all the data that we've reviewed, all the root cause analysis we've reviewed where there have been failures and as part of this system program component you'll see there's PWSCC there. That, the criteria that's in the TR is from the 1990s and obviously we've learned a lot since then and each plant that's implemented risk-informed ISI actually no longer uses that criteria, they use the criteria in MRP 139 which has been updated based upon the operating experience.

CHAIR STETKAR: Thank you.

MR. DUBE: Stephen Dinsmore, you want to add anything? Thank you.

CHAIR STETKAR: Anything else from other members? If not thank you very much, and we will recess until 10:15.

(Whereupon, the foregoing matter went off

the record at 9:58 a.m. and went back on the record at 10:14 a.m.)

CHAIR STETKAR: Okay, we're back in session. Don, back to you.

MR. DUBE: Thank you. Thank you. We're going to shift gears to a totally new topic, risk-informed tech spec initiative 5b. This has to do with the surveillance frequency control program. If risk-informed ISI was, these are rough numbers, 50 percent risk and 50 percent deterministic or some proximate fraction like that. Surveillance frequency control program is much more heavily weighted towards, you know, deterministic and the feedback mechanism and risk because it tends to play a surprisingly small role in it. Yes, there's calculations that are done but it's really, you know, operating experience-based in many ways.

So there are the key methodology and guidance documents. There's the Nuclear Energy Institute guidance document 04-10. It's been around for several years. And there's again several reg guides, 1.177 is very broadly based risk-informed tech specs, and 1.174 is always there. We looked at one new light water reactor vendor -- oh, I'm sorry, at least one new light water reactor vendor and one

combined license applicant have expressed interest in applying 5b. And in speaking informally to other applicants, once they get their COL they may be interested in moving forward with this as well. So there is quite a bit of interest out there.

CHAIR STETKAR: Don? Just out of curiosity, I know the COL applicant. Can you tell us which reactor vendor is interested in 5b?

MR. DUBE: It's Mitsubishi APWR.

CHAIR STETKAR: Oh, okay. Because I know they've indicated they're postponing that, at least for the design certification.

MR. TJADER: Excuse me, this is Bob Tjader. I'm in the Technical Specifications Branch. Last Friday, I think it was last Friday where you have the MHI APWR ACRS meeting. I intended to be there. Unfortunately I was rained out but I called in on the phone -- this is just an aside -- and unfortunately I found out when I called in that it was listen-only. So I attempted to interject at that meeting because I had called in but I was unable to do so. But MHI misspoke. The risk-informed tech specs for the ones that are significant, that's 5b and 4b, in fact are reflected in the design cert tech specs of the APWR, okay? They are reflected there as an alternative, as

an alternative approach or an alternative that they can opt to adopt, okay? Now, Comanche Peak is the specific licensee that is adopting that. Now, North Anna is another APWR and they've opted not to do it. It is an option.

CHAIR STETKAR: It's an option in the certified design tech specs.

MR. TJADER: They are in there as an option.

CHAIR STETKAR: Okay. Thanks.

MR. DUBE: Thank you, Bob.

CHAIR STETKAR: Bob?

MR. TJADER: Yes?

CHAIR STETKAR: You know, we're having a briefing on that topic for US-APWR on the 20th.

MR. TJADER: Right.

CHAIR STETKAR: You'll be there?

MR. TJADER: Yes.

CHAIR STETKAR: Thank you.

MEMBER BLEY: Good.

MR. DUBE: Okay. And then the last bullet, risk increased assumption. This is a very, very bounding kind of calculation. The definitive probability is derived entirely by the standby failure model 1/2 lambda T. When one does a calculation, if

one does a calculation and you'll see as we go through here a lot of these changes to this advanced test, you almost can't do a calculation, very difficult in any case. The vented assumption is that T is the time between, the interval between testing and cert 1. Normally test monthly and one wanted to extend the test interval to quarterly which is every three months, inherent assumption is that the failure probability on demand for that component would triple. That's not real world. Real world's a combination of demand failures and standby failures, not necessarily linear like that, a lot of complications. But for the purposes of doing these calculations to come up with some kind of bounding risk number there's an inherent assumption.

CHAIR STETKAR: Some kind of risk number, not necessarily bounding.

MR. DUBE: Yes. The benefits of risk-informed tech spec, at least certainly from the licensee or the applicant's viewpoint but also from the staff and overall stakeholders in society is to optimize surveillance frequencies. In other words, use operating experience to say why, I've been testing this piece of equipment monthly for 10 or 15 or 20 years. I've not experienced any adverse trends.

There's a risk to reactor trip or some other situation as you'll see in a lot of these surveillance systems. Why not try to optimize it and perhaps change the test interval to something less frequently with a larger test in place? In many cases the very process of testing may result in unavailability. In fact, there's an input into PRA models which is test and maintenance unavailability. Testing is a portion of that. So in many cases the very act of testing equipment means sometimes one has to valve out certain portions of the system and the equipment or the system or the train is unavailable during the testing. And that contributes to overall system unavailability.

Increased equipment life. A lot of the times just testing equipment wears it down. You've heard the stories of the diesel generator fast starts and others, slow starts for the most part. But there's other cases where just the act of testing it stresses the equipment.

It's important to know that tech specs are still required on the equipment, it's just that portions of the tech spec are now put in a separate document that has its own change process and maybe under 50.59 for example. But there is some, tech specs are still applicable. And the bottom line is to

enhance safety, to optimize testing, reduce stress, reduce equipment wear, reduce unavailability but without necessarily increasing the failure rate and trying to find the happy medium if you will.

The next slide nobody can read but this is the methodology. I'm going to take a snapshot of this.

MEMBER BLEY: We can't even read it here.

MR. DUBE: I know. But two slides from now I'm just going to zero in on a portion that you can read. So that's why I have this process in brief and text. Basically the process is to select candidate for new surveillance frequencies. So a lot of this comes from the engineering and operations staff of the unit, the nuclear unit. They're looking at what's the operational experience, what's the current frequency testing, is it a resource burden, are we wearing out the equipment, is there potential for tripping a reactor. Every time one has control rod motion, every time one does certain testing you can potentially if things go wrong trip the reactor in a worst case scenario, trip a system that may ultimately trip a reactor. So testing does not necessarily, is not always beneficial. So there's a lot that goes behind this. I'm probably not doing it

justice but a large effort is undertaken to find what equipment are good candidates. And they propose a new frequency, then they'll evaluate the proposed change. They'll review commitments, the reliability history, the availability history, look at the industry as a whole, the plant-specific operating experience. So I mean, none of this is risk-based so until now it's really been driven by operating experience, some of the deterministic criteria.

MEMBER BLEY: Don?

MR. DUBE: Yes.

MEMBER BLEY: Back to a quick remark John made earlier. I studied that flow chart and I actually can read it if I look down at my sheet. There's a potential problem I worry about and we've asked people in I think it was some design cert sessions as well about this. The standby failure rate model that gives you a 1/2 lambda T gives you that because of a constant failure rate assumption. If in fact you extend intervals substantially new failure modes can be introduced. In valves you can build up deposits and things can occur that actually get cleaned every time you cycle the valve. If you extend these intervals you can introduce new failure modes such that you're no longer at constant failure rate.

It takes a big jump up. And then this isn't conservative, it isn't even close. And I don't see where in the process there's a check to make sure you don't do something like that until, you know, the real world starts telling you hey, these things are failing a whole lot faster than --

MR. DUBE: If you want I'll show you the feedback mechanism. I think there are.

MEMBER BLEY: Okay. I don't want you to forget this one.

MR. DUBE: No, I won't.

CHAIR STETKAR: I was going to say if the logical equivalent of those backstops that we saw for ISI we will for 4b.

MR. DUBE: I believe there are.

MEMBER BLEY: Okay.

MEMBER ABDEL-KHALIK: Is there any potential that this process that's on slide 34 can produce a negative outcome? And what would the licensee do in that case?

MR. DUBE: We'll talk about it, but the answer is yes, it can. So -- and I'll talk about that in a second. So it's all pilot, the feedback mechanism, it's -- so the proposed changes reviewed and approved at the plant by the licensee as a minimum

would be typically reviewed by the Integrated Decision-making Panel or IDP. In some cases it may be reviewed by an oversight committee, oversight review board and then submitted to the staff for the staff's review and approval for a change to the licensing basis.

MEMBER BLEY: Is this where you check to make sure they haven't extended too far and might not be introducing new failures?

MR. DUBE: No, that's coming --

MEMBER BLEY: Okay.

MR. DUBE: -- in a slide or two.

MEMBER BLEY: Okay.

MR. DUBE: Then they implement it and then they monitor and the monitor is the key part to your question, Dr. Bley.

MEMBER BLEY: That's what I thought you were going to say, and that means you're going to have a bunch of failures before you realize you did something funny. And it just seems like if you kept some analysis it's extending a quarterly to an annual or biannual test. That ought to be a flag that you ought to have some evidence that you're not going to introduce new failure modes and I don't see that.

MR. DUBE: My colleague from NRR Andrew

Howe.

MR. HOWE: This microphone is not made for short people.

MEMBER BLEY: You can bend it.

MR. HOWE: Can you hear me? I was a reviewer for the 04-10 methodology and I'm the reviewer for a good number of the 5bs that are coming in now. Just for information about 40 percent of the industry has proposed to implement and we've approved about one-third now. Just for your information and I don't know if it's specifically in the methodology but there are checks that are made when you're extending a surveillance test to see not only the specific component that's being tested but what else is done by the test. And in fact during the pilot process at Limerick they identified relays that were only tested by this test they wanted to extend and that was the only time that they were exercised and they found that they couldn't do the test for other reasons. The risk was perfectly acceptable, there were no commitments, so these types of consideration have arisen in the pilot process. It is a part of the process.

The other thing we have is you don't go from a monthly test to a 10-year test or something like that. You go to a next logical increment in the

tech specs, monthly to quarterly, quarterly to 18 months.

MEMBER BLEY: I'd like to see something that implies that because we had at least one case where people were presenting to us and I think it was going from a quarterly to a biannual test. And just hadn't thought about this point that we could be introducing new failure modes. Now if what you just said is how this will be implemented I'm much more comfortable but I don't see anything that limits us to that or if some other person is reviewing we'll make sure that we're picking that up.

MR. DUBE: It's specifically in the guidance. It's definitely in the guidance that one increases the surveillance test interval in a phased manner from the next most logical test interval.

MEMBER BLEY: I've got to go back and look at this. I'm not sure I saw that. I'm sure I didn't catch that. Okay, so you're done? Okay.

MR. HOWE: No, that's good.

MR. DUBE: So that was a nice setup.

MEMBER SHACK: It is specifically in the guidance.

MEMBER BLEY: Okay.

MR. DUBE: Thank you. So this is a

continuous feedback mechanism which is increase the interval in increments, stop and observe, monitor. If there is an increase in the failure rate there's a mechanism to go back and go back to the shorter test interval if you will.

MEMBER ABDEL-KHALIK: Where is that on this chart? That's the question I was asking before.

MR. DUBE: Right here. Adjustment required, go to step 13. So it's a feedback error step 20. The Integrated Decision-making Panel reviews and adjusts the surveillance test interval as needed. Is there an adjustment required because of bad experience? Yes. Go to step 13.

MEMBER ABDEL-KHALIK: Do you think the licensees would then just abandon this particular inspection and say forget it, we'll just stick with what we have?

MR. DUBE: Based on our experience I don't believe they would.

MEMBER ABDEL-KHALIK: I mean how many cases have you seen in which the licensee came to you and said we really ought to change this from quarterly to monthly?

MR. DUBE: I haven't seen any personally. I don't know if there's any answers out there.

MR. BRADLEY: Biff Bradley, NEI. The way the process is set up it's a -- you implement the process. There's no requirement to go back and report to NRC exactly what you've changed. You set the process up, it's subject to audit and inspection but there's no report of results. We do track this through the owners groups and other industry mechanisms to try to make sure there's a reasonable uniformity to the way this is implemented.

MR. DUBE: But in practice since certainly for the new reactors they are required to maintain and update their PRAs and the PRA requires the incorporation of plant-specific operating experience. If there's an increase in the failure rate of the equipment it will be reflected back in the inputs to the PRA model. It's required.

CHAIR STETKAR: Failure, yes, but it's a self-fulfilling, if they use a lambda T model you might not necessarily see that because it's sort of a self-fulfilling process.

MR. DUBE: Well, the 1/2 lambda T is there for the theoretical calculation of where the risk impact is but nobody really necessarily believes that as the true operating experience-based failure rate. It's not necessarily that.

CHAIR STETKAR: Until you look at the PRA models and you see people predicting the actual failure rates for valves using that model. Anyway, that's a different topic, but indeed they are.

MR. DUBE: Yes. So from the current fleet, Andy kind of mentioned it, 40 percent reactors are approved for 5b. The Integrated Decision-making Panel's review is key. They've rejected many proposed changes based on these deterministic considerations, for example, the relays where there's an oxide buildup and if you don't open the relays frequently enough they end up being in effect stuck together, stuck closed in other mechanisms. Whenever possible risk assessments are used but many changes don't lend themselves to precise risk calculations. It's interesting to note that the typical PRA will have three to four to five thousand basic events modeled in the PRA representing several thousand components whereas there's millions of components within the plant. And so many of the components, one's not going to be able to do a quick sensitivity study. It'll have to do some kind of bonding calculation.

I've already mentioned the testing interval that changes in phases from monthly to quarterly, for example, to annual. The criteria needs

to be set that says, this is one of the feedback lessons learned is that when does one decide that the failure rate has increased to an unacceptable level. And one of the other lessons learned is that one needs consistently good performance before moving on to longer test intervals. So one shouldn't go from monthly to quarterly to annual in a period of four months, for example, and that hasn't been the experience.

So for the new reactors we look at what are the important considerations and one doesn't have adequate operating experience. So one has to first assess the applicability of the equipment performance from the operating fleet. And there's certainly consensus because of that that it will be several operating cycles before there's an adequate confidence on the baseline performance in the new reactors. So while 5b may be applied to new reactors I'm not expecting right off the beginning that in the first operating cycle one would be implementing this. I mean, even the industry based on their own experience with the current fleet have expressed the notion that they're not going to be ready to jump right into 5b right away. It's going to have to be phased in.

CHAIR STETKAR: Don, we'll learn more in

our US-APWR subcommittee I guess but does that statement also apply for Comanche Peak?

MR. TJADER: Excuse me, this is bob Tjader again. What I think, what we mean is that they will have reflected in their tech specs the option to apply the surveillance frequency control program. It will be in the tech specs. The initial surveillance frequencies in the program will be the frequencies that are in the standard tech specs. Those will be the initial ones. What we do not anticipate because of the process, because of 04-10, we don't expect them in the very first cycle to start changing massively surveillance frequencies. We expect them to gain some experience before they then apply what will be in their tech specs as their ability to.

CHAIR STETKAR: Okay, so if I understand it you don't expect a submittal from Comanche Peak to come in with Chapter 16 of the COL FSAR saying we're going to test this system at a frequency of once every three and a half years because we've done a risk-informed 5b analysis.

MR. TJADER: No, Comanche Peak will have a surveillance frequency control program in those specs. Assuming that the results of the tabletop are acceptable as we anticipate it will be in there and we

1 don't ask them to withdraw it. So they will have that
2 option to change it and there will be no subsequent
3 change requirement to come in for a license amendment
4 or anything to change the surveillance frequency.
5 They can do that through the process and the program.
6 Did I misunderstand your question?
7 CHAIR STETKAR: Perhaps but it's actually
8 -- we'll address it when we talk about the Comanche
9 Peak. Keep it focused on more generic issues here.
10 MR. DUBE: Okay.
11 CHAIR STETKAR: But it's interesting
12 because you know from a committee perspective ACRS --
13 Comanche Peak will be the first time we actually see
14 this in practice. So this is actually a defined term
15 type issue that we're going to be addressing, not
16 necessarily under reliability and PRA perspective but
17 under the Comanche Peak COL eventually.
18 MR. DUBE: Okay. I already mentioned the
19 first bullet in so many words that first of all,
20 actually I didn't say this part of it. We did, you
21 know, one of the key points of the program is that
22 components that fall under the ASME inservice testing
23 program, ISD, are not subject to 5b. That's an
24 important insight in that these are typically your
25 major pumps and major valves that often dominate the

risk at current fleet and new reactors. And those are not subject to risk-informed tech spec 5b. They still have to -- it's a separate program but under 5b they're not subject to changes in the surveillance test interval. So those, again, those are your major pumps and valves that do that. We had one reactor vendor did come in with, did perform sensitivity studies. And in keeping with not having three significant figures I've rounded them to the nearest order of magnitude. They did sensitivity studies on what if they were to apply 5b to certain components that they knew from their PRA to be pretty important in terms of the contribution to risk if you will at that particular reactor design. So they looked at in the first case increasing the test interval on battery testing by a factor of 4 including common cause failure and the change in core damage frequency and LERF on the order of 10^{-8} per year.

There's a requirement to ensure that power is removed from motor-operated valves that are open, have to be locked open and you really don't want to change state to a closed connection for example. And there's no reason to believe quite frankly where changing this surveillance factor of 3 is realistic but for the purpose of sensitivity study they triple

the failure probability of that because they didn't do surveillance to ensure that the valve had power removed, that the failure probability on demand was tripled. The estimates of change of core damage frequency is on the order of 10^{-9} and LERF 10^{-12}. Similarly for residual heat removal, isolation valve power, where they have to observe the power is removed they triple the failure rate and you can see the 10^{-7}, 10^{-8} order of magnitude changes in risk. In the diverse actuation system whereby the manual control they doubled the interval and doubled the failure rate and the estimate was 10^{-9}.

Most of these numbers are definitions of zero increase. And they're bounding numbers because as I said the fact that you ensure that power is removed when you remove the valve is typically due to a state of being closed when you thought it was open and so forth.

You know, it was difficult to do quantitative analyses on these mainly for the reasons that I stated in the first bullet which was mostly your risk-significant components, valves, diesel generators which doesn't necessarily come under ASME but diesel generators, valves and important pumps are subject to RITS 5b so it tends to be a lot of

miscellaneous things. Control-wide motion in a boiling water reactor or some of these odd surveillances.

CHAIR STETKAR: Hey Don, batteries are pretty important though.

MR. DUBE: Yes.

MR. HOWE: This is Andrew Howe again. I just want to, maybe this is a fine point. I want to make sure this is clear. If a component is subject to inservice testing the inservice testing program governs the frequency of that test. But you may do other testing on that component that could be subject to 5b. So it's kind of implied on those that an ECCS pump is subject to inservice testing so I can never change a frequency associated with any test on that pump. That's not true. There are other tests you do that could be subject.

MR. DUBE: Okay, thanks for the clarification, Andy.

CHAIR STETKAR: Don, in the material that we received I don't recall seeing these numbers.

MR. DUBE: Correct.

CHAIR STETKAR: For the subcommittee meeting. Okay.

MR. DUBE: It wasn't part of the meeting

minutes. It was --

CHAIR STETKAR: Okay. The presentations tended to be sort of generic, sort of --

MR. DUBE: They weren't part of the meeting minutes and there was no written presentation by the applicant or reactor vendor.

CHAIR STETKAR: These are sort of anecdotal.

MR. DUBE: If you were there at the meeting -- well, they weren't anecdotal but they were verbal answers. They weren't written down.

CHAIR STETKAR: You didn't look. You didn't actually look at what they did in any detail or did you? I can read these numbers here but I mean how they arrived at those numbers.

MR. DUBE: No. How they arrived at for example battery testing that has a certain failure rate, or a certain probability of being in a failed state upon demand and they quadrupled it, the failure probability.

CHAIR STETKAR: Okay.

MR. DUBE: So they're sensitivity studies. But we did not do our own calculations.

CHAIR STETKAR: I'm just trying to understand. Those numbers weren't derived from the

same let's say level of detail of tabletop exercises for example as the ISI or --

MR. DUBE: They were.

CHAIR STETKAR: Oh, they were?

MR. DUBE: The licensee used the PRA model, quadrupled the failure rate and looked at the delta CDF. And they actually gave a number with one significant figure --

CHAIR STETKAR: Yes, no, I'm sure, probably 6.

MR. DUBE: But I rounded it off.

CHAIR STETKAR: Okay.

MR. DUBE: Probably two or three significant.

CHAIR STETKAR: At least.

MR. DUBE: So we mentioned again kind of to the bottom line-ish if there's such a word the surveillance frequency program is controlled by other -- that are controlled by other programs typically excluded. Andy Howe answered it best, equipment covered by inservice testing for example, major function valves. They have some of the highest risk importance in terms of risk achievement at Fussell-Vesely or however you want to typically look at it, and those particular tests are excluded from this

program.

CHAIR STETKAR: But only the tests that the inservice testing program specifically examines particular failure modes for example.

MR. DUBE: Right, exactly. There may be certain failure modes that aren't.

CHAIR STETKAR: That aren't tested by that.

MR. DUBE: But these are typically, you know, start the pump, run the pump, check that the pressures and flow rates meet the criteria and so forth.

CHAIR STETKAR: You don't necessarily have to show that the pump actually delivers flow all the way to the reactor vessel for example through the injection lines. Because it's only a pump-centered --

MR. DUBE: It can't do that anyway. Again, the Integrated Decision-making Panel's review of the proposed changes strengthens the process again. It's kind of a universal theme for a lot of risk-informed applications. There's an Integrated Decision-making Panel that reviews these to look at deterministic considerations, brings to bear a broad range of expertise. Some licensees have additional approvals such as the Plant Operations Review

Committee and/or the Oversight Review Board.

The key to this is continuous monitoring and feedback and periodic reassessments are fed back to the Integrated Decision-making Panel. I've mentioned before the actual changes in the reliability equipment is captured in the operating experience and fed back into the plant-specific failure rates that I use in the PRA. We mentioned before unacceptable equipment performance could result in returning the surveillance frequency to the previous setting although we could not off the top of our head specifically identify an example for the benefit of the members.

MEMBER ABDEL-KHALIK: To the previous setting but not to a more stringent setting.

MR. DUBE: Yes, they could. They could go back to a more stringent setting as part of the feedback mechanism. I can't come up with an example off the top. But it's -- in addition to the -- there's a lot of reasons other than risk-based why one might not want to substantially increase the surveillance test interval. The applicant or licensee has to look at the impact on defense-in-depth, maintenance rule is factored in there. If they increase the test interval too much and we're seeing

increase in failure rates this could have an adverse impact on the maintenance rule and shifting it from routine treatment to stricter treatment. In some cases it may impact the mitigating system's performance index in that it could result -- if there's certain failures they could result in an increase in that index. And other programs are impacted. There's a lot of reasons to be cautious. But the licensees have expressed why not to necessarily push the test interval all the way to a point of having enhanced failure rates.

In many cases the bottom line here is programs, there's programs for reasons other than risk where they may not want to necessarily have a long increase of test interval because it may reduce operational flexibility and safety margin. If they increase the test interval and were to experience failures one has to, it has to be in a situation of entering tech specs. There's tech spec to allow outage times, completion times perhaps and one might not want to push that envelope. One might want to keep some operational and safety margin. Finally, we mentioned the phased approach whereby surveillance test intervals would be graduated from monthly to quarterly to annually.

So preliminary results on RITS 5b. We mentioned it's more deterministically based certainly than risk-based. I mean to the extent one can do a risk calculation one does it, but it's really driven by factors other than risk. In many cases it's just based on deterministic criteria, the feedback loop, the monitoring of performance and adjustment. We mentioned that there's a need for sufficient baseline operating experience on affected equipment during the initial cycle or cycles of reactor operation before fully commencing the implementation of RITS 5b and beginning the process of changing the surveillance and test interval. I think that's it.

MEMBER BLEY: Are there going to be any examples that give us a hint of how one evaluates changes in defense-in-depth when you do this kind of analysis?

MR. DUBE: I would look to some of my colleagues?

MEMBER BLEY: I'm wondering how you evaluate changes on defense-in-depth and decide if they're significant or troublesome since that's one of the key criteria you went through.

MR. HOWE: This is Andrew Howe. I really can't speak to any specifics of how licensees actually

implement the non-risk portions of it.

MEMBER BLEY: Anything in the tabletops that look at that?

MR. HOWE: I'm trying to remember how -- I have some of the same short-term memory problems.

MR. DUBE: I don't recall.

MR. HOWE: Anyone from industry has a recollection?

MEMBER BLEY: I mean, those are nice words but I just wonder what they mean.

MR. HOWE: Well I think the focus of the tabletops was more on the risk aspects of this.

MEMBER BLEY: That's easy.

MR. HOWE: So it really wasn't a focus of the tabletop.

MR. BRADLEY: This is Biff Bradley, NEI. The process, the guidance has a number of steps that I think inherently address the concept of defense-in-depth. I don't remember that we have a specific DID step but the evaluation as Don has indicated, the risk aspect of this is really just a check on the result. We're really looking extensively at the operational history, the vendor recommendations, everything about these components which, I think that's how we believe we're addressing defense-in-depth. But unlike say 4b

or something else there is no backstop in 5b or any specific DID attribute.

MR. TJADER: This is Bob Tjader. If I could just put my perspective on the defense-in-depth a little bit on this. And this may relate to whether or not you ratchet the surveillance frequency to a more stringent frequency than it is currently. And that is surveillance frequencies and tech specs are checks to ensure that systems are operable. So the intent is, and not only the intent, the expectation is that when a surveillance frequency is performed it will succeed, it will pass, the system will pass the surveillance frequency, and if it doesn't there's a problem. And as was mentioned by Don, if you fail a surveillance you then enter the LCO, you enter a condition of inoperability and you have to restore that system within a completion time. So if you are in a tech spec you have lost a train for instance of a system and you have lost a certain redundancy, you've lost defense-in-depth. So if there is a history of failing surveillance frequencies then that system or component should not -- then that process of NEI 04-10 should exclude that frequency from being changed to a less frequent interval. If there is a history of failing that surveillance it should not

even be a candidate for having the surveillance frequency changed because you have a history of entering the LCO, of losing the redundancy, the defense-in-depth and that type of thing.

MEMBER BLEY: Okay, I'll just, I'll promise you guys before the next meeting I will have studied the guidance a little better and understand how it does the things we're hearing it's supposed to be doing. And what you say makes sense but it's kind of advertised a little more strongly.

CHAIR STETKAR: Don, go back to your slide 38 because I think some of the numbers on there. If you look at that first bullet and I think, you know, you're characterizing these in absolute terms but if I look at the relative terms that change changes core damage frequency by 10^{-8} so that's a number. It also changes large early release frequency by 10^{-8}. Now, as a percentage of total core damage frequency that may be a fairly small fraction of core damage frequency. It sure as heck is a much, much larger fraction of large early release frequency so that to me indicates that that proposed change is indeed a degradation of defense-in-depth because we're much more sensitive, given core damage, to getting a large early release for that particular proposed change if

I interpret those numbers that way. Whereas the other examples tend to march down in parallel. So that's I think a bit of the notion that Dennis was curious about, and how that type of comparison is evaluated in terms of the prudence of increasing that. Even though the absolute numbers are relatively small.

MR. DUBE: Right. I mean what you're seeing, I don't have the results in front of me nor the cutsets, but what you're seeing here is preferentially affecting sequences associated with electrical support systems where the conditional containment failure probability is approximately 1.

CHAIR STETKAR: That's right.

MR. DUBE: But what if it, you know, just the way it turned out if it had affected other sequences it might have been delta CDF of 10^{-7} and delta LERF still 10^{-8}, it may not have affected it.

CHAIR STETKAR: But I mean we have a risk model and that's the only thing we can use to generate those numbers. But it gives us some insights about where we may be challenging that type of defense-in-depth issue.

MR. DUBE: Again, with 10^{-6} and 10^{-6} I might be concerned. I'm not sure.

CHAIR STETKAR: Well, but if the total

core damage frequency was 4 x 10^{-8} then the total large early release frequency was 4 x 10^{-9} I might then be concerned about this on a relative basis. You know, not knowing what particular plant this is or what the absolute magnitudes of those metrics were. Okay, thanks.

MR. DUBE: That's it for that topic.

CHAIR STETKAR: Before we switch to this topic do the members have any more questions about 5b in particular, the surveillance intervals? Because you're going to switch to a -- now for something completely different. Nothing? Okay. Proceed, sir.

MR. DUBE: Okay. Yes, this is dramatically different in the sense of this is not an application so much but a change control process. And which in the Commission SRM the staff was directed to do. And in many ways does reflect itself in probabilistic space or severe accident space. So we'll, you know, it's on the agenda and one of the tabletop exercises but I think the membership here will find the presentation interesting.

I mentioned earlier that there's a guidance on the 50.59 process for the current fleet and there's a new Appendix C that's in draft stage regarding a change process for the new reactor design

and the Part 52. This is looking under, put your new reactor hat on, departures from Tier 1, Tier 2 and Tier 2*. I'll give examples certainly of the first two tiers. But in a nutshell Tier 1 are changes that we need prior NRC approval. Tier 2 can receive licensee or license-holder can make changes on their own subject to a 50.59-like process. 2* are in between and they do for the most part require staff prior approval. This guidance will have, as I said, one-stop shopping so it's going to have looking at the impact of the design basis accidents, PRA, aircraft impact, loss of large areas, Tier 2 changes to ex-vessel severe accident design features. And it's the last bullet which was the topic of this particular exercise.

We had an internal workshop on this back a year ago to lay the groundwork. We had a public workshop in December of last year and then another public workshop on the draft guidance in August of this year. Now that August didn't make the deadline for today's briefing but since we had done three-quarters of the work might as well just present the results now so that's what we're doing. So that's a quick background.

Where does this come from? Each -- in the

rule language each certified design, here I give Appendix VIII of Part 52 which is Advanced Boiling Water Reactor. These are exact wording of the change process and it comes under VIII.B.5.c and it states verbatim that a proposed departure from Tier 2 affecting resolution of an ex-vessel severe accident design feature identified in the plant-specific design control document requires a license amendment if either one of two conditions are met: there's a substantial increase in the probability of an ex-vessel severe accident such as a particular ex-vessel accident previously reviewed and determined to be not credible becomes credible -- that's a mouthful -- or there's a substantial increase in the consequences to the public of a particular ex-vessel severe accident previously reviewed.

Now, this rule language has been there since the very first design certifications 15 years ago or so and to this date no one has defined what does it mean by substantial increase. So it was our task force challenge to if not come up with a complete definition of "substantial increase" at least say this is what it looks like, what a substantial increase might look like. It's like a piece of art. I noticed on Dr. Shack's background or screensaver he had a

piece of art, it looks like Van Gogh or somebody, something, I don't know. You don't know what beautiful art is, you can't give a definition to it but you know it when you see it. So we started coming up with very precise definitions of "substantial increase" and we ended up coming often into circular logic and it was very hard to pinpoint a definition, especially since the lawyers haven't come up with a definition for 15 years. So we tried to come up with examples and work that way, and you'll see some of the outcome.

But let me begin by saying what is an ex-vessel severe accident design feature. The rulemaking, specifically the statements of consideration behind the rule are very explicit and for the advanced boiling water reactor, the final rule, it applies to, quote, "severe accident features where the intended function is relied upon to result in postulated accidents, when the core is melted and exited the reactor vessel and the containment is being challenged." You know, very narrow definition of an ex-vessel severe accident. So when one's going through the process you're looking at those features specifically put there for that purpose. So their core catchers or reactor cavity flooding systems, base

mat material, what have you, any of these features, but things to prevent core damage not necessarily because it's to prevent or mitigate ex-vessel.

In addition, the commission was cognizant of features that have intended functions to meet design basis and resolve severe accidents. And if it's a feature that has a dual role, a dual function, if the change is being made that could impact design basis accidents and pretty straightforward, they were Chapter 15 typically of the design control document. One uses the VIII.B.5.b criteria. If it's an ex-vessel severe accident feature one would be using the B.5.c criteria.

The regulations are pretty clear what are meant by challenges to containment integrity. And the design control document that applicants submit are required to address how -- to submit how they address the following containment integrity challenge issues: core-concrete interaction, steam explosions, high-pressure core melt ejection, hydrogen combustion and containment bypass. But when we had the first two or three, these two or three internal and external workshops we did struggle with containment bypass. That's, for example, interfacing systems LOCA or an induced, thermally induced steam generator tube

rupture. It didn't necessarily meet the definition of ex-vessel severe accidents and so it was the consensus of workshop participants that while features that address containment bypass certainly are important from the severe accident viewpoint they did not meet the rule language as an ex-vessel severe accident criteria. And it was the consensus that features that address that, these are like to prevent high-pressure to low-pressure situations or interlocks for example on valves would not necessarily fall under VIII.B.5.c criteria. They might fall under other criteria and may in many cases be subject to staff review, but they do not fit ex-vessel severe accident features criteria.

CHAIR STETKAR: Don, let me -- hold up there. Because this is sort of a very different topic and I haven't really thought about this very much. But going back to that example from the last presentation about the conditional containment failure probability being 1 given the loss of all dc.

MR. DUBE: It wasn't necessarily a loss of all dc but I hear your point. Yes.

CHAIR STETKAR: Whatever it was then.

MR. DUBE: Right.

CHAIR STETKAR: That could be a line

that's directly, you know, if we're talking about ex-vessel events then we're talking about containment isolation for example. Is that not a candidate under VIII.B.5.c in the context of the way -- that's the separate issue for containment?

MR. DUBE: No.

CHAIR STETKAR: You would say no. So this is a very, very narrowly defined set of conditions.

MR. DUBE: We're using rule language and the statements of considerations.

CHAIR STETKAR: Okay. But redefining the concept of what is called a containment bypass. The red section on your slide there says there's apparently still some --

MR. DUBE: In and of themselves --

CHAIR STETKAR: New definition of what that might mean.

MR. DUBE: -- they may not be ex-vessel severe accident features.

CHAIR STETKAR: Okay. What is then a containment bypass if it's not, you know, an actual tube rupture, an induced tube rupture or an interfacing system LOCA?

MR. DUBE: It's in Never Never Land. In fact, that's one of our conclusions from this.

CHAIR STETKAR: There is no containment bypass under VIII.B.5.c.

MR. DUBE: It's like an orphan. It never had the best home. The home right now would be, one would evaluate under VIII.B.5.b because that's the fallback. But it doesn't fit ex-vessel severe accident.

CHAIR STETKAR: So you're saying that, you know, the attorneys crafted these things and the attorneys hadn't really thought too carefully about what containment bypass might be?

MR. DUBE: I don't know. We're correcting this.

CHAIR STETKAR: Okay.

MEMBER REMPE: So when you have a statement later on that talks about a non-ex vessel severe accident, when I was reading this I was going well, why doesn't he just say in-vessel and that's why you have that phrase, right?

MR. DUBE: Yes.

MEMBER REMPE: Okay.

MR. DUBE: Yes.

CHAIR STETKAR: Okay.

MR. DUBE: One of the insights from this activity is we don't have the best home for it.

CHAIR STETKAR: Yes, okay.

MR. DUBE: In my opinion.

CHAIR STETKAR: I mean, as long as there's a home for it someplace, that's the important issue.

MR. DUBE: And it turns out there's very, very strict design information in Tier 1 for things like interfacing system LOCA for the pressure interlock valves between high-pressure and low-pressure. I mean, one would think so but. So you know, the whole purpose of this is what has to get staff review, that's the whole purpose of this. Since Tier 1 has to have staff review, feel comfortable by luck --

(Laughter)

MR. DUBE: -- would require staff review. Because there's a lot more detail in Tier 1 than one would expect. But I'll give you some examples here. So, examples of ex-vessel severe accident features. Reactor cavity flooding systems to promote in-vessel cooling and retention of core debris. This would be in AP1000 would take credit for cooling the reactor vessel. And yes, there's a small probability that for some sequences it may not be able to retain it in-vessel but for many sequences it does. And that would be an example. Reactor vessel depressurization to

promote in-vessel cooling and retention of core debris. In AP1000 a pre-condition to be able to cool the vessel externally is to depressurize. If they're not able to depressurize the reactor cooling system, the AP1000 PRA Level 2 model assumes it would be a containment failure probability of 1.

Reactor cavity flooding to promote ex-vessel cooling of core debris in the lower reactor cavity or base mat area. Reactor cavity designed to enhance core debris spreading and coolability, containment over-pressure protection, combustible gas control. These are igniters and passive catalytic converters. And containment sprays.

CHAIR STETKAR: The interesting thing though is on this bullet you call out containment over-pressure protection, containment sprays and heat removal.

MR. DUBE: Or it could be --

CHAIR STETKAR: Why did they belong in this bin and are not covered under the other design features the same way as my magic dc power sort of thing?

MR. DUBE: For example, AP1000 has a non-safety containment spray system.

CHAIR STETKAR: Oh, okay.

MR. DUBE: Fits this criteria. It's not taking platform design basis accident.

CHAIR STETKAR: Okay.

MR. DUBE: ABWR has a passive hardened wetwell vent is another example that fits here.

CHAIR STETKAR: Okay.

MR. DUBE: So again, features specifically to address containment bypass don't have -- doesn't have a home here. And to give you an example of a Tier 1, here's from the advanced pressurized water reactor. This is a Tier 1 so any changes to this would require prior NRC approval. This is under the fire protection program but you see in red the fire protection system is to put out fires, but it also can provide containment spray and water injections to the reactor cavity for severe accident mitigation. Very specific. So if they were to make any changes where -- it's kind of a go/no-go where they wouldn't be able to credit this now for flooding the cavity that would obviously require prior staff approval. Under Tier 1, the same feature but in the containment system it appears there with different wording but fire protection water injection may also be used to inject water to the drain lines from the steam vent compartment to the reactor cavity. So these are high-

level, system-level, function-level changes. They could not make any changes to this without prior staff approval. But they could make changes to Tier 2 and if they did it would have to go through this 50.59-like process and say what's the impact on design basis accidents, what's the impact on ex-vessel severe accidents.

And so here the similar language, it turns out to be pretty general. Under the fire protection program for severe accident mitigations, containment spray system and water injections of the reactor cavity. Sometimes you see the same general language in Tier 1 and Tier 2 but often you'll see very specific language in Tier 1 and more frequently than not a lot of specific language in Tier 2. So here under Tier 2 you really see even more specific. Under fire protection system you have 200 percent capacity pumps. One is diesel-driven and one is electric motor-driven fire pump. So could the applicant or the license-holder -- they could make a change to Tier 2, not a change to Tier 1. Under Tier 1 they have to have some kind of system to flood the cavity. Tier 2 gets specific as you have to have 200 percent capacity pumps, one's diesel-driven, one's electric-driven. They could propose a change to this and let's say go

from 200 percent to 250 percent. If it has a design basis, a licensing basis, a function, they have to review it against those criteria. And if it has ex-vessel severe accident function they would have to review it against that. And obviously the fact that the diesel-driven is ac-independent helps mitigate against a number of station blackout sequences has to be taken into consideration before they may propose a change.

CHAIR STETKAR: But from a licensing review if it's not in a Tier 1 it's simply, they do the justification and it's an inspection and audit function, right? From the staff's review of changes if it's something that's only in Tier 2, not Tier 2*, not Tier 1, the staff --

MR. DUBE: There's very little that's just in Tier 2 that's not in one way, shape or form in Tier 1.

CHAIR STETKAR: I'm going to get to the second part of the question first. I don't want to understand how the staff -- the staff review. If I went in under the red highlighted material that you've just presented and I decide to put in one and only one crank-driven --

MR. DUBE: You change from 2 to 1 because

this --

CHAIR STETKAR: Okay, I change from 2 to 1 then, and it's motor-driven or you know, manual mechanical driven, whatever. I haven't changed anything in Tier 1. I've simply changed this. In terms of the staff's review of that change that's simply an inspection audit function of the analysis that the, at that time the licensee would perform, is that right?

MR. DUBE: At the end of an operating cycle and I forget the frequency the staff, the licensee is to provide the staff with a summary of the changes made under 52. And the staff's resident inspector or otherwise can subject and question the licensee on an adequate or inadequate 50.59 safety evaluation, 50.59-like safety evaluation.

CHAIR STETKAR: Now, in the context of this particular narrowly focused ex-vessel severe accident topic the -- is there -- you're NRO. When the staff looks at the design certification is there an active effort made to think about functions that do perform the EVSA --

MR. DUBE: Yes.

CHAIR STETKAR: -- activity and make sure there's a hook back up into Tier 1?

MR. DUBE: Yes.

CHAIR STETKAR: Or at least --

MR. DUBE: I think that another important insight of this is you find the design control documents fit two molds. One of them is these things are scattered throughout the design control document in the least likely places. Who would think -- I mean if you're intimately familiar, fine. But who would think you'd have under the fire protection system an ex-vessel severe accident feature. In other cases, I'll give credit, advanced boiling water reactor has all of these features in one nice table. Staff can't require but we strongly encourage as a result of this tabletop and we've said it several times, it would be nice if there was a roadmap to all these features so that pity the system engineer at a plant responsible for fire protection. They've got to do their homework.

CHAIR STETKAR: Well and you the staff need to do all of this highlighting as each of the individual system reviewers go through their function.

MR. DUBE: And this is a paradigm shift having worked at a nuclear utility for over a dozen years. You need people at plant site familiar with severe accident space because one has to be aware that

some of this equipment is credited for design basis accident analysis and severe accidents. I mean it's a whole different skill set.

CHAIR STETKAR: Yes.

MR. DUBE: Just an insight. I mean, just observation. So here's a -- so, one would have, if one proposed a change, I mean they have to obviously, realistically would anyone go from a diesel-driven pump to electric to a hand-cranked? No, but one has to look at the impact on the fire protection program, licensing basis, commitments and severe accident. And someone has to wear a severe accident hat at the site in my opinion.

So here's the penetration. One would find this in 6.2, the containment section of the design control document, Tier 2. So theoretically any changes to this penetration, I'm talking substantive change obviously, replacing the check valve with something else, normally a locked closed motor-operated valve. You know, a connecting line from fire pump. It would have to go through a 50.59-like process looking at the impact on the licensing basis, the design basis space and potentially ex-vessel severe accident space.

CHAIR STETKAR: Unless they remove that

check completely does that impact the Tier 1?

MR. DUBE: Probably because this is --

CHAIR STETKAR: So that isn't the 50.59, that's actual change to the --

MR. DUBE: That's a design basis requirements.

CHAIR STETKAR: -- design basis change. Okay.

MR. DUBE: You couldn't do that. So, why are we here? One of our tasks was to try and come up with definitions of "substantial increase" and it was difficult. We looked within the staff, we looked at qualitative, quantitative definitions, combinations. Fortunately the commission kind of helped lead us in the sense that staff requirements memorandum that I mentioned earlier strongly influenced our decision to refrain from a quantitative definition. The fact that the commission told us do not change the risk metrics in so many words led us to believe that we -- and not to institute new risk metrics or quantitative criteria tended to lead us to try and avoid coming up with a strict quantitative definition of what is a substantial increase. I mean, is it a 10 percent increase, is it a 100 percent increase, is it a 10, I don't know. It's like again going to nice classical

art. I know it when I see it but I can't tell you 10 percent is substantial, it depends on context, depends how close one is to a certain margin. If that 10 percent increase put them above 10^{-4} core damage frequency goal or 10^{-6} large early release frequency goal, that would be different than if they had so much margin that 100 percent increase wouldn't make any difference. We ended up with so many and's and or's you know in a quantitative definition that we tried to stay away. We were concerned with creating a de facto new risk metric that the commission told us not to do so we shied away from a quantitative definition of substantial increase. I think what we have should do. I think it's in the right direction.

For evaluation of substantial increase in probability we mentioned just a few minutes ago that each design control document in fact states whether and how each severe accident challenged containment has been addressed either qualitatively or quantitatively. Go back, way back to these challenges to containment integrity. By regulation the applicant reported how they addressed these phenomena and they may have used words like it's incredible, not physically feasible, impossible, so on and so forth but they addressed why these phenomena, how they've

1 addressed these phenomena and why they're no longer of
2 key concern at their particular reactor design. In
3 some cases they use quantitative definition, in some
4 cases qualitative definition, and that's fine. But
5 either qualitative or quantitatively it is stated in
6 the design control document how they've addressed
7 those phenomena and made the concern basically low, of
8 low risk importance.
9 So part of the definition was we said
10 well, you know, as part of the guidance we've used
11 words like don't use the, you know, don't focus in on
12 not credible. The license-holder has to look at how
13 they may have used quantitative definitions,
14 qualitative definitions but they may have used
15 practically eliminated, not physically feasible, not
16 relevant, and they have to take that into
17 consideration. Unfortunately like I said it would
18 have been nice to have the definition 15 years ago but
19 the horse is out of the barn and we can't go back.
20 But we can put in the guidance to say hey, just don't
21 focus in on credible definition. Look at how one
22 eliminated these concerns. A change that adversely
23 affects the original basis for not being credible
24 could be a substantial increase, and we'll give
25 examples. For example, in the US EPR the strategy is

to convert high-pressure core melt sequences into low-pressure sequences. And these are, that's a paraphrase and the exact quote is so that a high-pressure vessel breach can be practically excluded. This is achieved through two dedicated severe accident depressurization valve trains. So it states right there in the design control document that they've addressed the potential for high-pressure melt ejection, direct containment heating and these other ex-vessel severe accident features by turning high-pressure sequences into low-pressure sequences. And they even got more specific and said we had two dedicated depressurization valve trains so there's redundancy there.

CHAIR STETKAR: And that's in DCD Tier 1 of the US EPR?

MR. DUBE: I don't recall off the top.

CHAIR STETKAR: Because you've quoted it.

MR. DUBE: I think this might be in Chapter 19 of Tier 2. But the basis is, this sets the basis. The reason it's, quote, not credible or we use the word excluded is because of these two trains. So if they made a substantial change or did something to go from that, from two trains to one train or substantially increase the reliability, availability

of these systems that would negate the basis for why they excluded this in the first place. So train, a feature that was, that addressed the severe accident challenge and made it, use the word you want, not credible, physically impossible, not relevant, practically eliminated. That would make it now in the realm of credible would be a substantial increase. And here in this particular example it would be certainly going from two trains to one train. I mean, one can't write this for all the possibilities and combinations. You've got to leave some latitude to the --

CHAIR STETKAR: But for example, let's stick to the two-train and you know, I don't recall and it doesn't make any difference the details of that particular design but if for example those were automatically actuated valves given, you know, core exit temperatures or pressures or something like that, and they change, didn't change it from 2 to 1, but changed them to manually operated is that a substantial change?

MR. DUBE: Yes. And the guidance that we've written says to take a look at those things, the power supplies changing from automatic to manual and then there's a number of criteria.

CHAIR STETKAR: Okay. And you say guidance you've written, it's the --

MR. DUBE: That's the NEI and its contractors wrote it and the staff reviewed it and provided substantial comment and proposed changes.

CHAIR STETKAR: Is there a reg guide coming out or is it?

MR. DUBE: It's Appendix C.

CHAIR STETKAR: Oh, it's Appendix C.

MEMBER SHACK: Which we haven't seen.

CHAIR STETKAR: Okay. I was curious. I didn't remember it but my short-term memory is worse than anybody's.

MR. DUBE: I don't know if that was included.

MEMBER SHACK: I didn't find it.

CHAIR STETKAR: Trust me, if he didn't find it it's not.

MR. DUBE: It was sent but it was not identified Appendix C. But it was a marked up guidance for ex-vessel severe accident features. You didn't see -- you wouldn't have seen all of Appendix C.

MEMBER BLEY: Because of the ex-vessel stuff that you sent.

MR. DUBE: Because that has design basis changes, LOLA, aircraft impact, so forth. But the two- or three-page lineup specifically on ex-vessel I believe was part of --

MR. POWELL: It's an enclosure to the ex-vessel severe accident meeting that we held.

MEMBER BLEY: Oh, the meeting summary?

MR. POWELL: Yes. It's an enclosure to that meeting.

CHAIR STETKAR: The only thing I have is slides from the presentation from that meeting.

MEMBER REMPE: There's a four-page summary.

MEMBER BLEY: But it has no enclosures.

MEMBER REMPE: Yes, I don't see an enclosure to it.

CHAIR STETKAR: That's okay. We'll get a --

MR. DUBE: We'll check on it. It should have been part of the meeting summary. Oh, I know why.

CHAIR STETKAR: The meeting summary is just the short --

MR. DUBE: It did not include them because it didn't make the cutoff.

CHAIR STETKAR: Oh, because of the August 9th meeting.

MR. POWELL: Oh yes, that was part of the 50.69 meeting.

CHAIR STETKAR: You mentioned in the introduction that you had a meeting on August 9th I think you said. Okay.

MR. DUBE: But the staff did formally, first week of September formally sent to NEI a marked up Appendix C subsection on ex-vessel.

CHAIR STETKAR: We'll hear about that then in February let's say or whatever we're targeting for the next subcommittee meeting.

MR. DUBE: Unless you're interested in the interim.

CHAIR STETKAR: Then as a practical sense I don't think we'd be interested. I don't think it's feasible.

MR. DUBE: We'll work with you. Okay. Substantial increase in public consequences. Again, we looked at qualitative and quantitative definitions. It's hard to come up with a definition. Sometimes it's easier to say what is not a substantial increase by demonstrating how the affected functions would still be successfully accomplished. In so many words

that's -- and then we added to that by saying a substantial increase would be for departures that remove, defeat or significantly degrade the performance in an ex-vessel severe accident design feature and tied it back to for example containment performance goal in SECY-93-087 and SECY-90-016 would no longer be met. These are commission papers and a staff requirements memorandum endorsing a number of severe accident features to address severe accident phenomena. And again, maybe it's easier to give examples on these than to come up with a verbatim or exact quote.

An example of not an increase in public consequences would be a licensee or it actually could be not quite a licensee, someone -- well, it would be a licensee in the COL. So a licensee identifies a non-conformance in that the thickness of a portion of the reactor cavity floor concrete is 0.1 foot less than the minimum thickness specified in Tier 2 of the reference DCD. You'd be surprised but many of these dimensions are actually in Tier 1 which the license-holder could not change without prior NRC approval. But let's say for example that there was some specifics on base mat thickness and then there was a non-conformance. Because typically they're not going

to -- one would not purposely reduce the thickness but it's possible as a result of going back and inspecting and the concrete's been laid out, finding the non-conformance. We've got to justify that it's acceptable and not a substantial increase of public consequences. One could look back at the severe accident analyses that were done, either the MAAP analyses, MELCOR analyses, whereby there were ex-vessel calculations done on core concrete interactions for example. And one of the important criteria was that for the most likely severe accidents that containment integrity would hold for at least 24 hours after the initiation of the accident. One would look and say there's a large margin between when one would start to challenge containment integrity resulting from these calculations to the 24-hour. At one point one-tenth of a foot easily falls within the capability and would not impact any of the conclusions regarding the capability to withstand 24 hours, maintain integrity for 24 hours and would not impact any of the guidance in the commission papers.

So then I have to go back. You can't just write it off and go back for the -- look at the calculations or the original basis for concluding that a particular ex-vessel or several ex-vessel severe

accident challenges were addressed and reached a logical conclusion that 1.2 inches in thickness doesn't impact the original basis. On the other hand there may be another example based on comparison with existing analysis. Oh, that just provides the basis. I'm sorry.

An example of increasing of public consequences on the other hand might be where a licensee considers reducing the capacity of the containment venting system by 50 percent either because -- it may be advertent or it may be inadvertent. It may be intentional or unintentional but for whatever reason one found the situation where the containment vent flow rate was reduced 50 percent from what the staff had previously reviewed and approved in the original design control document. The licensee performs the calculation, determines that the 50 percent reduction would significantly degrade the containment venting function such that the containment may not be able to survive the pressures associated with the containment performance goals in 93-087, 016 as approved by the staff requirements memorandum and described in the standard review plan. So it's not sufficient for the license-holder to do a perfunctory review. They have to go back and look at the original

basis, especially for a substantive change like this. So it's possible that some changes are just editorial, talking about changes to the Tier 2 design control document, are not substantive and can easily be screened out. And there's a process in the Appendix C to screen out but certainly a substantive change like this the licensee would be expected to go back, review the original basis for why this system is designed the way it is.

MEMBER SHACK: But I mean, you know, this one really could get kind of tricky. I mean, if the original venting was designed to keep it within say design basis pressure but this new one lets you go up to 1.5 times design basis pressure does that significantly degrade the containment? In its ultimate strength? I mean, that's getting to be kind of a judgmental thing here.

MR. DUBE: Yes, it is judgment here. Obviously this system is not credit for design basis accident analysis.

MEMBER SHACK: Right. But how far above design basis do I go before I significantly degrade the survivability of the containment?

MR. DUBE: Well, in this particular plant, assume this is advanced boiling water reactor which we

purposely left out because in fact in Tier 1 of the ABWR specifies flow rates and pressures. So we want to make the example useful without you know making it a moot but if this were the advanced boiling water reactor they wouldn't even be able to change -- they wouldn't be able to change this under Tier 1 anyway.

MEMBER SHACK: Because it's a flow rate --

MR. DUBE: Because it actually specifies flow rate, kilogram per second of steam at certain pressure. Let's just say there's a new design out there that hasn't applied yet and so on and so forth. So we want to make the example useful but the answer to your question is I would have to go back, look at what the set point is for the design, what were the flow rates. Was it design intended to limit pressure to 95 percent confidence that you wouldn't exceed the ultimate failure probability or some other value. Sets the original basis and say if I reduce the 50 percent would that conclusion change. If the answer is yes it would change that conclusion it could be a substantial increase in public consequences. It still falls within the original basis. If they had margin, then it might not be.

MEMBER SHACK: Suppose I still had 70 percent confidence that it would survive.

MR. DUBE: Now you know why we didn't have quantitative ID.

MR. ADER: Hey Don?

MR. DUBE: Go ahead.

MR. ADER: I think there's also service-level C for 24 hours is one of the containment performance metrics. Service-level C would be, you know, precise.

MEMBER SHACK: Would be the criteria that you would use.

MR. DUBE: Right. In that particular example. Thank you, Charles.

CHAIR STETKAR: Are there subtle things that creep in here? For example, you know, looking forward 50 years, 60 years in the future when the new reactors are coming in for power uprate, or 30 years in the future, power uprate, somebody does a 20 percent power uprate on a new reactor. That in principle would need to be evaluated relative to these criteria also, whatever the criteria are.

MR. DUBE: They need to be reviewed.

CHAIR STETKAR: Because that's not so much degrading the mitigation system, it's increasing the input hazard.

MR. DUBE: And that's the reason for one-

stop shopping on Appendix C to put all the change processes there. And that example, to put some definition and examples here. Another good reason why it would be nice if each reactor vendor consolidated or at least put some kind of referencing of all these features in one place. It's another reason why, you know, I'm getting ahead of myself but under Reg Guide 1.174 it would be nice to have a step in there that says look at these features for new reactors because it's something different that you don't have.

CHAIR STETKAR: It would be nice to look at them for old reactors too.

MR. DUBE: Well. There's nothing driving new current reactors.

CHAIR STETKAR: I understand.

MR. DUBE: Right now. So the preliminary results of this little exercise. We focused on definition examples of substantial increase. Certain I'll call them severe accident features do not address ex-vessel conditions and appear not to be in scope by the rule. For example, features to prevent ISLOCA/containment bypasses. A clear example that doesn't have a home right now, the guidance says evaluate under VIII.B.5.b which is the design basis function. I mentioned here, I didn't use the word

"lucky," I used the word "fortunately" there's enough details in Tier 1 that such features cannot be removed and significant design changes are precluded. In fact, I did for the AP1000 went through quite a bit of detail and looked at some of these aspects and did a mapping of features that helped address severe accidents but not be ex-vessel. Fortunately, you know, a lot of these like right in Tier 1 it says, you know, you have such and such valves at such design and the low-pressure piping outside containment has to be able to withstand realistically full reactor coolant system pressure capability. That's in one of the commission papers. And you have to have these interlocks and so on and so forth. So for some of the important issues of concern there's backstops if you will, but you can't rule out some, you know, plant down the line not having this detail in Tier 1.

CHAIR STETKAR: Yes, I was going to say, you know, the words "fortunately" here and the fact that you went back and looked at AP1000 and sort of satisfied yourself that there was adequate protection if you want to call it that in Tier 1 for that particular design. You know, we're still looking at other design centers and it would be a real confidence-builder I think for us to be able to hear

that people in the staff are actively doing that, you know, absent the nice table of things that apparently the applicants may have some reluctance to deliver.

MR. DUBE: So for now this is in, it's right in the guidance in the ex-vessel portion. It says containment bypass, need to evaluate under here. So there is review that's done but it's not, you know, it's not the best home.

CHAIR STETKAR: Yes.

MR. DUBE: Probably the best way to put it. So we haven't -- this was unanticipated. We haven't decided what we will do with this in terms of the commission paper and so on and so forth. We're still trying to evaluate what to do with this orphan. I mean, there is, like I said, there is guidance, specific guidance now that says take a look at containment bypass but it's not an ex-vessel severe accident feature and does not appear to come under this particular process. But there are other processes that would look at it.

CHAIR STETKAR: Yes.

MR. DUBE: That's it.

CHAIR STETKAR: Okay. Any member comments, questions on this topic? If not we certainly don't want to launch into 4b and the

maintenance rule so we will recess for lunch until 1:00. Thank you.

(Whereupon, the foregoing matter went off the record at 11:47 a.m. and went back on the record at 12:59 p.m.)

CHAIR STETKAR: Okay, we are back in session and I guess we'll hear about initiative 4b and the maintenance rule.

MR. POWELL: My name's Eric Powell and I'll be presenting the tabletop exercise on risk-informed tech spec initiative 4b and also on maintenance rule 50.65(a)(4). An overview of my presentation is as follows. I will begin by discussing key methodology and guidance documents, and for RITS 4b the primary guidance document is NEI 06-09. And for Maintenance Rule (a)(4) the primary guidance document is NUMARC 93-01. The rest of my presentation will cover the ABWR SPAR model case studies that were performed, the AP1000 SPAR model case studies, the vendor calculational results and I will conclude with the maintenance rule (a)(4).

For the ABWR SPAR model case studies some of the assumptions were that only internal events at power were modeled. CDF values are point estimates. The truncation was set at the default for the ABWR

SPAR model and that was 10^{-13}. All tests and maintenance set to false for all cases and any equipment that we took out in the cases we modeled the test and maintenance as set to true.

CHAIR STETKAR: Eric, I don't know how much you've played with these models and I certainly haven't played with them at all. You said you don't have -- do you have an external events model for the ABWR?

MR. POWELL: Not currently.

CHAIR STETKAR: Do you have any sense, have you looked at other SPAR models where you -- have you run any of these cases for other SPAR models for currently operating plants where you do have both internal and external events in the model. And do you see, if you have do you see any substantive difference when you include the external events. In other words, that the external events, part of the model may be more sensitive to particular equipment being out of service than the internal events model.

MR. POWELL: For the purposes of the tabletop that we performed we did not look at any existing SPAR models. We just looked at the ABWR which is the GE version and the AP1000.

CHAIR STETKAR: I understand that. I just

wanted to ask a question about, you know, to see if there's any --

MR. DUBE: Well, I may call on my colleague from NRR but there are some plants where certain equipment is taken a lot of -- heavy dose of credit is taken for external events like fire. I mean, it's like the safe shutdown path and there you can see big deltas. I would not expect that for new designs where you have three and four trains, physically separated, highly redundant. But as part of the ROP we are doing calcs on like the significance of certain equipment being out of service for a certain period. Times that we got input from vendors. Right off the top of my head we're saying almost equal amounts from fire and internal.

CHAIR STETKAR: Okay, so that may rise to the surface when you look at the ROP stuff.

MR. DUBE: Right.

CHAIR STETKAR: Even within the context of these exercises.

MR. DUBE: Yes.

CHAIR STETKAR: Okay, thanks.

MR. POWELL: Okay, so I want to give you kind of a flavor for our overall philosophy of the cases that we decided to run. As part of the tabletop

exercise. Don and I sat down and we were discussing that we wanted to come up with a systematic approach to taking various equipment out. And that's shown by we grouped it in various ways. And we also wanted to not necessarily think about and limit the cases that we ran up front, we wanted to almost do an academic exercise and try to run as many cases as we could postulate and push the limits of RITS 4b. And then after we did that we wanted to come back and apply the commission direction of what would be realistic cases.

And so with that in mind we came up with 24 unique cases to run for the ABWR to test the application of RITS 4b. And what I was touching on with the groupings, we took equipment out of service and we took electrical equipment out for the ABWR and that consisted of the diesel generators and also the combustion turbine generator. Then we looked at various ECCS equipment which consisted of RCIC high-pressure core flooder and low-pressure flooder. Then we looked at a combination of the electrical and ECCS. And then the fourth step was a combination of all of that equipment with the ac independent water addition.

This is slide 65. This slide shows the electrical connection to equipment taken out of service for the cases that we ran with the SPAR model.

And if you look it's broken up into three divisions, and division 1 has a diesel generator and a low-pressure flooder. Division 2 has a diesel, a high-pressure core flooder and a low-pressure flooder. And division 3 has a diesel, a high-pressure core flooder and a low-pressure flooder. And over top of all there divisions you have a combustion turbine generator that can provide electricity to various equipment in those divisions. And also other equipment that we looked at as part of the cases were the RCIC and also the ac independent water addition.

So on slide 66 the configurations that were modeled in the 24 unique cases were one of these three types, configuration A, B or C. Configuration A is what we would classify as most likely where you would have one division out for a planned maintenance. Division 2, or I'm sorry, configuration B would be where you'd have division 1 out for planned maintenance and division 2 out either due to planned or emergent. And we said this is a realistic case. And the vertical dashed line is to represent a snapshot in time of where the cases were run for the SPAR model. Because it wasn't like a time period, it was at a specific instant in time. And then configuration C is something that was unlikely but for

the purposes of the study we wanted to push the boundaries and so that case, that configuration would be one where there was division 1 out for planned maintenance, division 2 for planned or emergency maintenance and division 3 out for emergent. And that's not necessarily the entire division but equipment from one, two or three of those divisions.

Okay, so on the next slide this is a snapshot of some of the cases that were run. And just going across and explaining the top row the first case is just an arbitrary number that we decided to number each of the cases. And then the equipment not functional describes the equipment that we tested and then we took out for test and maintenance as part of the case in the SPAR model. And then the baseline CDF with no test and maintenance was 10.6, 10 percent to the -7 for the ABWR SPAR model. And then we calculated the CDF using the SPAR model. For example, case 1 for one diesel generator being out and then we calculated the delta CDF based on those two numbers, the baseline and then also the CDF for the actual case. And then we have a calculated completion time which is based on the risk-informed completion time limit of 10^{-5}.

CHAIR STETKAR: So that -- let me make

sure I understand what that column means. That says if I keep that diesel out of service for 44,135 days my core damage frequency then will be $1E^{-5}$.

MR. POWELL: Correct.

CHAIR STETKAR: Okay.

MR. POWELL: And then the next column over is the tech spec limit. And we pulled those directly out of tech specs. And for one diesel generator it was a 14-day completion time. And then the allowed completion time is the actual number that we used to calculate the ICDPs and for example this case number one since the completion time calculated was much greater than the tech spec limit it went to the 30-day backstop as designated in the NEI guidance. And then the last column is kind of a defense-in-depth column that shows the other available equipment to -- that you would have to perform the same function.

So during the case studies, like I said, I ran 24 unique cases and I want to call attention to case 12. And we can look at this graphical representation but in case 12 we had the RCIC pump as well as the two high-pressure core flooders out due to test and maintenance. And --

CHAIR STETKAR: So for those of us who are dummies that's no high-pressure makeup available.

MR. POWELL: Exactly. We classify that as a loss of function due to not having high-pressure injection.

CHAIR STETKAR: Okay.

MR. POWELL: And then also, and we'll get into the discussion of loss of safety function and why I'm calling special attention to those cases a little bit later in the preliminary results section. And then also case 21a is an example of where we were really pushing the limits of what would be allowed based on RITS 4b guidance. And if we flip back to that same graphical representation on slide 65. In this case we had two diesels out, diesel F and G. Also, the high-pressure core flooder B and low-pressure flooder A in combination with RCIC. So if you look at all the equipment we have equipment out from all three divisions as well as having RCIC out which is a significant amount of equipment and across all three divisions.

CHAIR STETKAR: This is probably a rare event. One would hope.

MR. POWELL: Configuration C which we decided was a very unlikely scenario and that was a case where you pushed the 10^{-5} limit of the NEI guidance. And that's kind of the extreme case that we

had to run in order to get to a CDF value that large.

CHAIR STETKAR: But if you go back to your case 12.

MR. POWELL: Yes.

CHAIR STETKAR: That configuration apparently is permitted by the current tech specs, is that right?

MR. DUBE: No, they're in a 12-hour action statement.

CHAIR STETKAR: well, but I can operate the plant for 12 hours in that configuration. So it's not, as opposed to the last one which is probably not permitted under the existing tech specs at all.

MR. DUBE: If you talk to an operator they'll probably tell you all I can do in 12 hours is get ready, call the dispatcher and start shutting down. I mean, you're right, 12 hours theoretically.

CHAIR STETKAR: No, I'm just thinking about in terms of this notion of what's realistic, what's not realistic. The 21-A because of the amount of equipment you know is not even addressed in the tech specs and you basically need to shut down, you know, immediately.

MR. POWELL: Well, both of those cases would be allowed by existing tech specs.

CHAIR STETKAR: 21-A would also?

MR. POWELL: Yes. Because of the way tech specs --

CHAIR STETKAR: There could be multiple LCOs.

MR. POWELL: You'd have to look at the electrical and also the ECCS tech specs. And for the electrical systems having two diesels out would require three days would be your completion time. And then RCIC in combination with two ECCS subsystems has a 7-day completion time.

CHAIR STETKAR: Oh, okay. So in principle that configuration is indeed allowed legally.

MR. DUBE: Now.

CHAIR STETKAR: Now.

MR. DUBE: Correct.

CHAIR STETKAR: I didn't -- thanks, that helps. So in that sense it's not an unrealistic, it might be a rare case but it's not unrealistic because the people who've written the tech specs allow you to operate the plant in that configuration legally.

MR. DUBE: They may not have thought of the risk impact, but yes, it's allowable.

CHAIR STETKAR: Okay.

MR. POWELL: Are there any questions on

the ABWR? Because I'm going to be switching to the AP1000 next.

MEMBER ABDEL-KHALIK: This is based on the original GE model? So it didn't include the new alternate feedwater injection system that they put in response to the aircraft impact rule?

MR. POWELL: I am not -- we don't credit any --

MR. DUBE: We don't --

CHAIR STETKAR: They didn't give credit for that in the design basis accident analyses so it probably isn't in --

MEMBER ABDEL-KHALIK: I mean, they were using the old GE model, so. Would the results change if you take credit for that?

MR. DUBE: I don't know enough about the system design. It probably works but I don't know enough about the system design. The new system.

MEMBER ABDEL-KHALIK: Okay.

CHAIR STETKAR: This is the certified ABWR design, not the South Texas.

MR. POWELL: No, it's not the South Texas.

CHAIR STETKAR: Oh, okay. It makes a difference. Yes.

MR. POWELL: Okay, so now switching to the AP1000 model case studies. I would like to put a disclaimer, at least acknowledge that there are issues with knowing that a passive system has failed prior to its use. And also that we used check valves or switchboards or distribution panels as a surrogate to model system or flow path failure for the AP1000 which was something a little bit unique because of its passive nature.

And so with that said some of the case study assumptions were again that only internal events at power were modeled. The CDF values are point estimates. For the AP1000 the truncation set default is 10^{-14} and all tests and maintenance again were set to false for all the cases. And any equipment not functional whether switchboards or distribution panels for the electrical systems. Or the valves for the ECCS systems, the test and maintenance was set to true in the SPAR model.

Okay, for the AP1000 we came up with 18 unique cases to test the application of RITS 4b. Again we came up with a systematic approach to the various categories and groupings of the equipment that we took out. We looked at the electrical equipment, whether it was dc power and ac power. We looked at

the passive core cooling systems of the CMT, accumulator, IRWST and also the passive RHR. And then we looked at a combination of the electrical and passive core cooling systems. And then the final grouping which would be non-safety systems and non-safety systems in combination with the passive core cooling equipment.

CHAIR STETKAR: You're saying you took out all non-safety systems or selected?

MR. POWELL: Not exactly all of them.

CHAIR STETKAR: Okay.

MR. POWELL: But a large grouping of them.

CHAIR STETKAR: Okay.

MR. POWELL: So similar to the ABWR this slide shows the Class 1E dc and passive core cooling system equipment for the AP1000 taken out of service for the cases that we ran with the SPAR model to test the RITS 4b. And if you look at the IDS system and divisions A and D you have a single 24-hour battery and in divisions B and C you have a 24-hour battery and also a 72-hour battery. And for the passive core cooling you pretty much have two direct vessel injection lines, A and B, and you have the accumulator CMT and IRWST injection off of each of those lines. And the IRWST has a motor-operated valve and then it

breaks into two check valves later on in the flow path. And so those are all equipment and valves that we modeled in the SPAR to simulate failure of those systems.

So for the AP1000 the headings for the table are the same as in the ABWR and they were calculated using the same method. I will call attention to case number 7 which was an IRWST injection line B. We modeled the motor-operated valve as failed in that case. And this was a case that we as the staff defined as a loss of function because the design could not mitigate a design basis accident in this case which goes beyond what is in the NEI guidance and that was one of the conclusions that we came to based on the case studies that were run, that there's different situations that could happen to where the loss of function is maybe not as it is defined in the guidance and that was one of the major conclusions we came up with. And also in case 9-A there's a loss of function and you couldn't mitigate against a design basis accident again.

CHAIR STETKAR: How are those kind of conditions treated today in -- for an existing plant? Because I'm not familiar with this process. I haven't really looked at what people submit. If someone

submits for example for a currently operating plant, a two-loop operating plant and they want to keep both of their accumulators out of service for, pick a number, eight hours. That would remove their mitigation for a design basis large LOCA accident. On the other hand the risk implications of that might be exceedingly small. Does the staff consider these types of issues that you can't mitigate a design basis accident for eight hours out of, you know, an eight-hour time period. Forget the frequency that you might enter it. And not consider those types of applications or, you know, how is that sort of thought process that you've just brought up regarding the IRWST and the accumulator for the AP1000 design? How is that reflected in sort of current practice?

MR. DUBE: Well, if it's a current question I'll turn it over to Andy Howe. But your point is well taken, this is very analogous, you know, to be familiar with the AP1000 you have basically two direct injection paths and the design basis accident, one of the more limiting ones is you break the A injection line and B side equipment fails or is unavailable. You theoretically need a design basis accident analysis. Same thing in current reactors. Take a two-loop, at least four accumulators, two in

each cold leg. If one's unavailable you have to, you know, the assumption is that the other three inject. If you were to have two unavailable you cannot mitigate a design basis accident. And that would be kind of analogous to this.

CHAIR STETKAR: Yes, I mean that's where I was trying to get to.

MR. DUBE: There's a strong analogy with accumulators and the PWRs.

CHAIR STETKAR: But I was curious how is -- is that thought process applied in current risk-informed tech spec submittals such that the staff would disallow those types of configurations regardless of how small the measured incremental risk.

MR. DUBE: Well, I mean the guidance says do not voluntarily enter into a situation where you take out -- cause a loss of function. Now, you could be in a situation where one equipment is out and you have an emerging situation on another one.

CHAIR STETKAR: That happens in the real world occasionally.

MR. DUBE: Yes, then you can meet your time frame but you can't voluntarily cause a loss of function.

CHAIR STETKAR: Okay.

MR. DUBE: Particular current reactors? I don't know. I'll ask Andy.

MR. HOWE: Yes, the answer to your question is yes, the technical staff is very attuned to proposals for changes to tech spec completion times where the condition is a loss of a safety function.

CHAIR STETKAR: Okay.

MR. HOWE: That typically involves multiple trains inoperable where if you're in a condition single failure is always set aside. But I can give you two specific examples without naming specific licensees but BWRs have a tech spec condition that permits both trains of split to be out of service for up to eight hours to accommodate testing and maintenance. A licensee wanted to extend that to I believe 72 hours. They'd had some NOEDs and they wanted to simply codify the tech spec. That was ultimately on the path for rejection. Then it was pulled back by that licensee. The eight hours was the standard tech spec limit. The staff was not going to go beyond that.

We also had a licensee come in recently and wanted permission to remove an SFAS actuation signal completely from service where it's multiple channels but you take more than two channels out in

certain combinations, the function would be lost. And that was renegotiated painfully over several months and several face-to-face meetings until we could scrap the condition where it wouldn't involve a loss of function. So the short answer is yes.

CHAIR STETKAR: Okay, good, thanks. That helps. I was just curious whether this is some new sort of thought or how consistent it is with --

MR. DUBE: No. Different systems but same thought process.

MEMBER SHACK: I mean, my understanding is though, I mean the NEI guidance would tell them not to come in with that kind of an application. Voluntarily.

CHAIR STETKAR: Voluntarily.

MEMBER SHACK: But it's still --

CHAIR STETKAR: The tech specs have to cover combinations.

MEMBER SHACK: You couldn't do it under 4b. Your tech specs may allow that. You couldn't get a 4b extension.

CHAIR STETKAR: Yes, but you might be able to get one for a single train out of service that would leave you more vulnerable to, you know, entering the other situation.

MEMBER SHACK: Yes, that's true.

CHAIR STETKAR: That's part of the game that gets played I think.

MEMBER SHACK: Right. But the star hitter was both of them out, right?

CHAIR STETKAR: Well, but I mean if you look at the timelines it's not.

MR. POWELL: This is the one CMT and one accumulator.

CHAIR STETKAR: Okay.

MR. POWELL: In this case. And the existing tech specs allow one hour for that situation. And RITS 4b wouldn't be applied so it would still be one hour.

MR. BRADLEY: Biff Bradley of NEI. Just to clarify, in traditional tech specs you get into LCO-3.0.3 if you have both trains out which is a very short shutdown statement. The way the 4b guidance is set up you cannot intentionally enter into that condition if 3.0.3 still applies just like it does today. The only exception is if you have an emergent condition that takes a train out when you already have the other train out and you can still show that it's still essentially functional. There's like a

paperwork problem or it may be like seismic qualification or something. We call that PRA functionality. I'm not sure that was a great term but that was the term that got put in there. But 4b is basically you cannot intentionally enter into a loss of function. It's no different from the way the current specs are set up.

MR. POWELL: Are there any more questions about the AP1000 SPAR model results? Okay. So moving on to the vendors calculational results. We had great industry participation. We had presentations on the US EPR, the ESBWR, the APWR and the AP1000. They didn't actually present results but a representative came and verbally discussed some calculations they performed. And for the US EPR there were very low ICDP values and most of the cases that they ran required the 30-day backstop to limit the ICDP. And these were similar results as the ABWR SPAR model cases that you had to have a significant amount of equipment out in order to reach the 10^{-5} limit.

For the ESBWR they were very low ICDP values calculated and this was a result of the ESBWR's N-2 design philosophy. For the AP1000, like I had mentioned a Westinghouse representative came and spoke about cases that they ran. They didn't actually give

a presentation. And what the representative said was that they confirmed the staff's results and that they were very, very close to what their model showed for the cases that we ran. And then for the APWR there were similar results again to the ABWR SPAR model cases. And for the APWR LERF was more limiting than CDF in some of the cases that they showed.

And a side note, the ESPWR and the APWR were the only designs that even looked at LERF factoring into the calculations.

CHAIR STETKAR: EPR did not?

MR. POWELL: Not in what they presented, no. Okay, so now I'll move on and discuss some of the features and regulatory programmatic controls of the RITS 4b application. One of the programmatic controls is that the risk-informed completion time is limited to a deterministic maximum of 30 days as I referred to as the 30-day backstop. And that's 30 days from the time that the tech spec action was first entered. That seemed to limit a lot of the cases from getting even remotely close to the 10^{-5} limit that is in the NEI guidance. And another one that we've talked about is the voluntary use of risk-managed tech specs for a configuration which represents a loss of tech specs specified safety function or inoperability of all

required safety trains is not permitted based on the guidance.

And then a regulatory control is that a license amendment request to implement RITS 4b is subject to a staff review and approval including the scope of the LCOs to which the program may be applied. So if an applicant wants to apply RITS 4b to a really specific LCO then to submit a license amendment it has to be reviewed and approved by the staff before they can even begin to apply it.

CHAIR STETKAR: But in new reactor space if I understand the process, and again we'll hear more about this in our Comanche Peak. The way the tech specs are now formulated is there are no completion times and it says we'll either use the standard tech specs or we'll use completion times that are defined in a separate document. The changes to that separate document can be made without staff review, right? In other words, I apply RITS 4b to the times in that separate document, not the times in the tech spec.

MR. POWELL: We'll call on Bob Tjader to clarify that.

MR. TJADER: You're confusing the surveillance frequency control program with the risk-informed completion time. The surveillance frequency

control program has a program in which the surveillance frequencies will be specified in that document of the program.

CHAIR STETKAR: Okay.

MR. TJADER: Risk-informed completion times basically has all of the existing completion times that are in the standard tech specs. They have all of those existing completion times written right there. All of the required actions that is associated with that completion time have to be completed within that completion time.

CHAIR STETKAR: I understand.

MR. TJADER: If they are not within that completion time, if they have risk-informed completion times they have the option to voluntarily perform a risk assessment, a quantified risk assessment where -- in which they determine what the risk-informed completion time will be. When they determine that then they can invoke that or if it exceeds 30 days they can then invoke the backstop.

CHAIR STETKAR: All right, okay. Thanks. But the staff doesn't necessarily review that calculation to just -- if they decide okay, you know, my tech spec says that I can have this piece of equipment out for 72 hours and I decide that I'm going

to exceed that. I do this risk-informed calculation that says well, I can have it out for seven days. The staff doesn't review that.

MR. TJADER: They don't do a pre-review of that other than review the PRA, review the calculator that is used, the monitor to ensure that that accurately reflects the PRA and does a good calculation. But they don't do a pre-certification of the calculation. They can audit it subsequent to that.

CHAIR STETKAR: Okay, okay. Thanks. You're right, I had misinterpreted those two parts. Thank you.

MR. POWELL: Okay, so moving on to the preliminary results on slide 74. The case studies that were performed highlighted examples of cases where some configurations ended up being a loss of safety function that were outside of the existing definition in NEI 06-09. As a result we identified the need for an enhanced definition of loss of safety function in NEI 06-09. For example, we recommend using the safety function determination program LCO 3.0.6 and examples to more clearly describe what a loss of safety function means.

MR. TJADER: Excuse me. Sorry, Eric. I

just want to clarify one thing. There's going to be confusion with this slide in that the safety function determination program there, that is not the same safety function determination program. We should use a different term. LCO 3.0.6 is basically a safety function determination. It's not a program as in the control section of the tech specs. What you have to do is 3.0.6 is because there's not -- getting into some detail -- because since they're not cascading in the tech specs. In other words, if there is a support system tech specs and a supported system that is in the tech specs the support system, i.e., electrical system you enter its LCO. You don't have to cascade to the subsequent system that's in the tech specs. But what you have to do is do a safety function determination in accordance with 3.0.6 to ensure you haven't lost function. If you've lost function then you have to cascade to the supported system in the spec and you have to be in both specs at the same time.

CHAIR STETKAR: So if I understand that because I'm woefully uninformed about the intricacies, if I have a simple two-train plant and I have two motor-driven injection pumps you're saying that if I take out the electrical bus that supplies train A I

don't need -- I need to do a safety function determination such that if I discover that I also have pump B out simultaneously I've now violated that safety function.

MR. TJADER: And then you have to be in both specs.

CHAIR STETKAR: Yes. Okay. That's the way it works?

MR. TJADER: That's the way it works.

CHAIR STETKAR: Thanks.

MR. DUBE: I don't think Bob's contradicting what we're saying. The point was --

MR. TJADER: It's just the term was confusing and I didn't want you to think that that's the same safety function.

CHAIR STETKAR: Don't explain it any more. I think I've got it. I might be wrong but at least I'm happy.

MR. POWELL: So during the tabletop the staff expressed concern that a reactor with a baseline core damage frequency of 5×10^{-7} per year on a one-time use of the current guidance for a maximum ICDP of 5×10^{-6} would represent actually 10 years' worth of core damage probability. And I was going to discuss that on the next slide and make you wait but I think

for continuity purposes I'll just go ahead and explain that now. So if you flip to the next slide this is an example of a case that was run for the ABWR which I was describing on the previous slide where one could achieve 10 years' worth of core damage in a short amount of time based on the given configuration. And for this case it was for the ABWR like I said and the equipment that's red and italicized is the equipment that was taken out due to test and maintenance for the case that was run. That was a diesel from division 2, a low-pressure flooder from B, a high-pressure core flooder from division 3, the RCIC pump as well as the combustion turbine generator. And that's five significant pieces of equipment that was taken out and this is one of the more extreme cases where lots of equipment was taken out and is not what the industry described as current practice. But it is something that is allowed by RITS 4b and it was a case that we did prior to the tabletop and as a result of the discussion at the tabletop and also the commission direction to use realistic cases.

This case is one that would be, sorry, would not be classified as realistic, but it was something that the staff brought up as a concern that if you had a mid 10^{-5} plant -- sorry, mid 10^{-7} plant

you could get 10 years' worth of CDF based on a particular configuration.

MEMBER BLEY: So if I understood what you just said this was just a case you guys made up to show that there would be a way to create such a situation.

MR. POWELL: Yes, it --

CHAIR STETKAR: Well, and I think they said it's -- this configuration is legally allowed, is legal. It's not illegal.

MR. DUBE: It could occur now.

CHAIR STETKAR: It could occur.

MR. DUBE: I mean it could occur with standard tech specs.

CHAIR STETKAR: Right.

MR. POWELL: And it was a case that we ran before the tabletop and we were discussing it and our concern was that a plant could receive up to 10 years' worth of CDF in a short amount of time based on a configuration but throughout the discussion at the tabletop it was discussed and the conclusion was that it's not a realistic representative case of current operating practice.

MEMBER SHACK: Would there be an update of the guidance that would say you would only take

equipment out in one division and that you could not then plan to take major equipment out in the second division? It has to be an emergent case?

MR. POWELL: There's nothing in the guidance that states that.

MEMBER SHACK: Well, the question is should the guidance be modified to state that.

CHAIR STETKAR: That would create havoc because if you look at the new plant designs typically you can have one of the four trains out infinitely, forever they're allowed. And you can do planned maintenance for an extended period of time on the second division.

MR. POWELL: For example, the EPR.

MR. DUBE: It's tough to write a rule that captures all the situations. I mean, to your point.

CHAIR STETKAR: I think it's dangerous to try to write a rule to capture this stuff.

MEMBER SHACK: Well, but then you're left sort of to the good judgment of the licensee that he's not going to get himself into this.

CHAIR STETKAR: Well, that comes back to when does the staff get involved in --

MEMBER SHACK: The question is how heavy a regulatory footprint do you want on this.

CHAIR STETKAR: Or are you satisfied with the criteria you have anyway.

MEMBER SHACK: Well, the criteria now allows me this.

CHAIR STETKAR: Yes.

MR. POWELL: And that's something that was also brought up that the stakeholders noted that existing standard tech specs provide fewer controls on the frequency of entering certain LCOs, especially risk-significant configurations.

MR. BRADLEY: Can I make a comment? This is Biff Bradley, NEI. Just to this point. The existing non-risk informed standard tech specs, there's nothing in there that precludes you from repeatedly entering your 7-day LCO as many times as you want. And you could create the same scenario where you run up 10 years' worth of risk with standard tech specs as you can do here. We simply don't do that. And we do have in the guidance, while it may not be totally prescriptive, we do have words in there to the effect that the primary risk management action is the proper sequencing and planning of activities so you're not overlapping trains and creating these kinds of conditions. And so I think, you know, experience has demonstrated we've maintained that.

CHAIR STETKAR: Doesn't, Biff, and again I'm woefully ill-informed on a lot of the practical aspects of this. Doesn't some of the requirements under the maintenance rule say that you need to examine those configurations before you enter -- regardless of this part of the --

MR. BRADLEY: Yes. As a matter of fact that's the reason, one of the main reasons (a)(4) of the maintenance rule was promulgated was because of the need to assess the risk impact of entering LCOs for maintenance which at the time was under question whether you could intentionally enter LCOs, especially multiple LCOs. But yes, that's -- you're basically double-regulated here with (a)(4).

MEMBER SHACK: With the current kind of limits that you're allowed under (a)(4) this would still be an allowable configuration under (a)(4) for an ABWR I think.

MR. BRADLEY: Yes, you are correct, you are correct in that regard.

MEMBER SHACK: I mean that's, you know, when you have these highly redundant plants you can do an awful lot.

MR. POWELL: Correct. So the last point I would like to make on the results of the tabletop

was that industry representatives highlighted current practice as realistic which is one division out for a planned maintenance followed by a single emergent failure in a second division. Given that situation the staff calculated ICDPs in the low 10^{-7} to low 10^{-6} range. So if anyone has anymore questions about the RITS 4b cases? If not I will move on to the maintenance rule 50.65(a)(4).

CHAIR STETKAR: What -- I do. At a high level, Eric, what were your or are you not willing to discuss it perhaps at the time overall conclusions with respect to the 4b as it's applied to new reactors? Is it that the current controls given the 30-day backstops --

MEMBER SHACK: And the loss of function.

CHAIR STETKAR: -- and the loss of function provide that adequate protection?

MEMBER SHACK: And the increase in risk.

CHAIR STETKAR: Yes, I mean that's --

MR. POWELL: I can give my opinion based on the cases that we ran for the APWR and the AP1000. The AP1000 cases seem to be more limited based on the existing tech specs. And so, and also the definition of loss of function. So there wasn't the ability to really get to 10^{-5} numbers. And the 30-day backstop

applied for the AP1000 when it was also keep the numbers well away from 10^{-5}.

CHAIR STETKAR: So not only an absolute but it gave you that margin. Okay.

MR. POWELL: And then for the ABWR it seemed like the 30-day backstop was more significant in preventing the approach to 10^{-5}. And also the loss of function was something for like the high-pressure injection case. But loss of function seemed more important for the AP1000.

MEMBER SHACK: Okay, that's describing the results. Now the conclusions from that are the controls are sufficient?

MR. DUBE: We're still internally debating it but if -- we're certainly no worse off in my opinion with risk-informed tech specs than existing standard tech specs. I mean, I have a big formula there that is probably not solvable or it's at least a PhD thesis to try to solve it. But basically what it's saying, how often and to what extent would a plant using standard tech specs enter these configurations with no extra risk management controls versus a reactor using risk-informed tech spec 4b where there's guidance, there's controls that limit how long one can stay in the configuration and the

specific risk management actions that have to be taken as one incrementally goes up, instantaneous core damage probability. So you know, I know we're being careful not to jump out and write the final overall conclusions but --

CHAIR STETKAR: No, and I think we have to be sensitive to that given this is obviously a work in -- I was just looking at this morning in your presentation for the risk-informed ISI you made some if not final, fairly definitive --

MR. DUBE: Yes, they were definitive.

CHAIR STETKAR: -- conclusions.

MR. DUBE: Right.

CHAIR STETKAR: And I was curious where you were in this particular initiative.

MR. DUBE: I think we'll feel comfortable if we can work on a good solid definition of loss of function, loss of safety function with examples to make sure that certain configurations would not be entered, or at least the right questions would be asked. Because some of these are pretty subtle. When we did some calculations, loss of a dc bus A so to speak and loss of the B emergency core cooling system, well, not very obvious until you go through and you look at does one have a loss of function there.

CHAIR STETKAR: Well and even, you know, on one of the slides that you showed in that sense that, I don't remember which one it is. I can find it quickly here. It's 67. Where you take out seven for those of us who just think in simpleminded terms, your case 12 that you take out all your high-pressure injection. You say you still have your low-pressure core flooders. You still need depressurization for example on this design to get there. So it's not simply looking at high-pressure flooders, you know, there are other things that need to be available. You're right, it's not a simple process.

MR. DUBE: If one takes a conservative definition here and says I've lost high-pressure injection, function and not allow this configuration I'd feel comfortable.

CHAIR STETKAR: That's right. If you define that as a function.

MR. DUBE: Right.

CHAIR STETKAR: That's right. Okay.

MR. DUBE: That's why to me everything is in a good and solid definition and examples.

CHAIR STETKAR: And there's no notion for the new reactors to eliminate the 30-day backstop?

MR. DUBE: No.

CHAIR STETKAR: Okay. Because what I was hearing is that 30 days, the loss of function and the 30 days --

MR. DUBE: There were also plants right from the beginning in their tech specs that are going to be approved by the staff and Bob Tjader can correct me if I'm wrong are going to allow right up front long, you know, operation with a given that a train is.

CHAIR STETKAR: Sure. That's the four designs.

MR. DUBE: Yes, the four train.

CHAIR STETKAR: You're only required to have three operable before you enter anything.

MR. DUBE: But that's pre-analyzed by the staff and so on and so forth.

CHAIR STETKAR: Yes. But I mean once you enter some sort of LCO that 30-day ultimata backstop is not being challenged.

MR. DUBE: No.

CHAIR STETKAR: Okay. Questioned let's say. Maintenance rule?

MR. POWELL: Okay, so switching gears to maintenance rule (a)(4) now. This table is taken out of NUMARC 93-01 and it shows the ICDP and the ILERP

values and the corresponding actions. And for ICDPs greater than 10^{-5} and also ILERP greater than 10^{-6} those configurations should not be normally entered voluntarily. And for ICDP values 10^{-6}, 10^{-5} and ILERP 10^{-7} to 10^{-6} and one has to assess the non-quantifiable factors and establish risk management for those situations. And then for ICDP values less than 10^{-6} and ILERP values less than 10^{-7} normal work controls are applied.

For the -- this slide 77 shows the maintenance rule (a)(4) applied to the ABWR RITS 4b cases. And what we did here was took all the cases that were run for the RITS 4b and recalculated the ICDPs using the allowed completion times in tech specs versus the allowed completion time using RITS 4b. I can see there might be some clarification needed.

CHAIR STETKAR: Try that again.

MR. POWELL: What that means is for this case 1 the ICDP value that's shown in this box is calculated using this value. What I'm trying to show in slide 77 is I re-quantified those, these ICDPs using the tech spec limit of the existing tech specs. So that comparison in the table below that has the RITS 4b cases and that shows you a comparison of how each of these cases would be categorized, whether or

not you use the existing tech specs or RITS 4b. So using regular tech specs you had one case that was greater than 10^{-5}. Using RITS 4b you had three cases that were greater than 10^{-5}. And then between the range of 10^{-6} and 10^{-5} for the existing tech specs in the cases that we ran there were three cases versus six cases of applying the RITS 4b completion times. And then for ICDPs less than 10^{-6} the regular tech specs had 21 and the RITS 4b tech specs had 16 cases. So this graph or this slide is really to show you a one-for-one comparison of the cases that were run and compare what maintenance rule would look like for the existing tech specs and what maintenance rule would look like for the RITS 4b cases. Any questions on that comparison?

Okay. Then for the AP1000 it was the same thing as the ABWR where the recalculation of the ICDPs for the RITS 4b cases was done using the allowed completion time in tech specs. And then the table below that shows a comparison of the ICDPs calculated using the risk-informed completion time. And for the AP1000 all of the cases were below 10^{-6} for the existing tech specs and also applying RITS 4b.

MR. DUBE: If I might add, the read of this is one thing that we found is the AP1000 has,

being a passive plant there's a lot of importance on things like dc batteries because you don't have big diesels, you don't have big pumps. And the batteries, the ac power supply have very restrictive tech specs, very restrictive, and that comes into play all the time. And that's why you see this situation. Tech specs versus RITS 4b, it's, the ICDP is constrained to 10^{-6} virtually all the time, at least all the cases we ran.

MR. POWELL: So now moving on to slide 79, the preliminary results for the maintenance rule portion of the tabletop. During the tabletop it was highlighted that when PRA approach is combined with other inputs such as the degree of defense-in-depth and plant transient assessment factors other than PRA are often more limiting in terms of the risk management action level. Also, NUMARC 93-01 Section 11 explicitly acknowledges there is variability in baseline core damage frequency and large early release frequency. Determination of the appropriate quantitative risk management action thresholds are plant-unique activities. And at the tabletop it was a consensus that NUMARC 93-01 Section 11 on implementation guidance does not appear to need substantive changes to address new reactor designs.

MEMBER SHACK: So for example when you assess non-quantifiable factors so you get rid of some of those cases in the ABWR just because.

MR. DUBE: It may, yes.

MEMBER SHACK: You didn't like the look of all that equipment out.

MR. DUBE: Well, yes. I mean, we -- it would have been interesting for you to have seen this because we had a number of contractors come in, Erin Engineering, and they demonstrated their, the online risk management tool PARAGON that's used at several reactors and went through cases. And most of the examples cited, you know, there's a defense-in-depth measure on the online risk management tool, it's not just delta CDF or delta LERF but there's other considerations. There's also concern about plant transient analysis because if you take certain equipment out of service one could put themselves in a situation where one more failure would result in a reactor trip. There's also maybe concerns about they call it regulatory risk which is.

(Laughter)

MR. DUBE: One more failure could trip an MSPI index, could result in having to request a notice of enforcement discretion or any of a number of things

and they don't like to use the regulatory margin so to speak. So there's, it's a highly constrained situation that consists of risk, you know, true risk, regulatory risk, you know, plant transient risk, defense-in-depth, and it's like squeezing in from all sides so that -- and most of the situations, it wasn't the change in risk that was the deciding factor on whether or not to enter certain configurations. It was an interesting insight I think.

MR. POWELL: Are there any more questions on RITS 4b or maintenance rule (a)(4)?

MR. DUBE: By the way, the backup slides have all of the cases for your benefit. There's some slight editorial changes from the handout material from the workshops, some corrections too, but basically they're the same cases pretty much. Okay.

MR. POWELL: Okay, so if there are no more questions I will proceed to discuss the next steps for the overall tabletop approach for the risk metrics on new reactor guidance. As we discussed earlier we have a public workshop scheduled for October 5th. And this workshop, the first portion will cover Reg Guide 1.174 and also LRF to LERF transition issues and any other miscellaneous licensing issues that haven't been discussed from the previous tabletops. And then the

second portion would be the ROP tabletop and we'll be discussing the STP findings, MSPI inputs and MD 8.3 applications from the current fleet as the examples to exercise the ROP. And I don't know, Dennis, did you need more clarification on the ROP? Because you asked about that earlier. I didn't know if you had received enough throughout the day.

MEMBER BLEY: Yes, I think enough until we see something.

CHAIR STETKAR: Where, Eric -- if I look at this it sounds like on October 5th you're going to reach agreement on the input for the ROP tabletops, is that right?

MR. DUBE: No, the actual results.

CHAIR STETKAR: Oh, the actual results. So there's agreement right now on what cases.

MR. POWELL: Yes, we had a planning meeting.

CHAIR STETKAR: You did.

MR. POWELL: And this is the actual findings of the agreed upon cases to run.

CHAIR STETKAR: Okay.

MEMBER SHACK: So essentially one where you actually took sort of real cases --

MR. POWELL: Yes.

MEMBER SHACK: -- and kind of applied them.

MR. DUBE: Yes, I mean, just to tease you a little bit there was an STP finding at one of our reactors at three turbine-driven aux feedwater pump failures in a short period of time and we took that case and applied it to the APWR that has two turbine-driven. That was an MSPI, actually, finding and applied it there and looked at the results. Other cases were SDP with various situations of emergency ac power and so on and so forth. So took the actual cases, exposure times, what if it occurred at this plant, this plant, this plant new reactor design.

CHAIR STETKAR: Do vendors run those cases through their models also for EPR and the APWR?

MR. DUBE: We ask them for input from their external events. Well, external. Internal fire, internal flooding. I don't think anyone has a seismic. And they provided us things like core damage frequency and risk achievement worth, and the rest is a simple calculation. So.

CHAIR STETKAR: Okay.

MR. DUBE: We're doing the calculations but, you know, they have the exact cases, the exact boundary conditions if you will to run the cases

separately. So.

CHAIR STETKAR: I was just curious because, you know, you have your SPAR models but it's only for the two designs.

MR. DUBE: Right.

CHAIR STETKAR: I was curious about how the other guys, folks have done that.

MR. DUBE: Right. I mean SPAR models are very close to the licensee's reactor PRA models, very, very close. Only, I know there's one big difference on the APWR on the, and you're familiar with this, Birnbaum value or risk achievement for the turbine-driven emergency feedwater pumps. That's a big difference.

MEMBER BLEY: That's a result. Why are you getting a different result, do you know?

CHAIR STETKAR: You said AP, a pressurized water reactor?

MR. DUBE: APWR, yes.

CHAIR STETKAR: You don't have a SPAR model for APWR, do you?

MR. DUBE: We just got it.

CHAIR STETKAR: Oh, okay.

MR. DUBE: We didn't have the model. We've got the table of risk achievement worth.

CHAIR STETKAR: And that's coming. I have a guess but I'm not going to.

MR. DUBE: We haven't certified and verified the model yet so you've got to take the results with a grain of salt.

CHAIR STETKAR: No, I suspect I know the reason on APWR but that's speculation and it's not a subject for this meeting anyway.

MR. POWELL: Okay, so continuing on with the next steps. In late fall of this year we plan on having another tabletop to identify any gaps in guidance. Then February 2012 there is a draft commission paper with recommendations that will be drafted. And also in February 2012 the public communications brochure should be concurred upon and complete. And then late March or April of 2012 we'll have another ACRS briefing with you all. And then late March of next year the commission paper for notation vote will be going out. So that's our --

MEMBER SHACK: You said March but you mean May.

MR. POWELL: I do mean May. After we brief you all again. So that concludes the tabletops that we've performed up until August. And that's all that Don and I have prepared for you all. Any other

additional questions for us?

CHAIR STETKAR: I don't think so. I think that as far as the subcommittee is concerned we need to be in communications about what's the most appropriate time to get the early spring briefing, what will be available. Obviously all the tabletops will be, the remaining tabletops will be finished by then. I guess it's just a matter of where in the process we get involved, you know, either for subcommittee meeting. I know you'll want a letter from the full committee but it's a question of timing in terms of what input we might provide in a subcommittee that could affect anything that you might present to the full committee. There's a danger, for example, in scheduling a subcommittee meeting two weeks before the full committee meeting because that doesn't give you enough time to react to any comments that we might have in the subcommittee meeting.

MR. POWELL: We can work with John Lai on scheduling.

CHAIR STETKAR: If you're, you know, tight on schedule in the first quarter of 2012 we need to be aware of that.

MR. DUBE: The key is getting a draft commission paper with a position that the staff takes.

CHAIR STETKAR: I understand. I mean, you know, that's the problem we always face in terms of the schedules though is that if for example you present, you know, a draft to the subcommittee and we have substantive comments that you take to heart you don't necessarily want to run up too close to a deadline for full committee presentation with a letter because it just doesn't give you enough time to digest our comments, make the appropriate changes and provide the document for the full committee review. So we'll just need to, you know, be aware of that.

MR. DUBE: Okay.

CHAIR STETKAR: Any other questions from any other members on this? I thank you very, very much. And now I know NEI has requested some time and has prepared some information. The fundamental question is do we take a break or do we just push to completion.

MEMBER BLEY: We're essentially done, right?

CHAIR STETKAR: It depends on how long.

MR. BRADLEY: I'll be brief.

CHAIR STETKAR: You will be brief? If you will be brief we will -- we will push to completion then. So I ask NEI or Biff, do you want to come up?

But thank you very much, that was very good. Appreciate it very much.

MR. BRADLEY: Are you ready?

CHAIR STETKAR: I'm ready if you're ready.

MR. BRADLEY: All right. I do have a brief presentation prepared. I'm Biff Bradley from NEI. I've been involved in the tabletops and overall I think this has been a very productive experience. And really I had a few points I wanted to make but for the most part they've been made either by the staff or in questions and answers that have been provided today so I don't want to be unnecessarily duplicative. Let me just run through a few points here.

This is just an overview of what I intended to cover. And the SRM, we all, the staff did a good job summarizing the SRM. These are just two quotes from the SRM on the commission reaffirming the existing goals and objectives and the direction to engage in the tabletops. I think these have been clearly and correctly articulated.

So we have, we're just about done with the licensing basis and 1.174 related tabletops. As John mentioned we still have one to go on large release frequency and any other 1.174 related issues. We just started the reactor oversight process discussion.

We've had one meeting, we have another one coming up in a couple of weeks. And that should be interesting. I think the ROP may be a little more challenging of an undertaking than the licensing basis changes have been. So again, this is redundant to what's been shown already. This is just a schedule or a listing of the meetings we've had and the topics that we've covered.

So, let me just sort of get to some observations. There was a considerable amount of discussion on the need for operational experience before these applications could be implemented on new plants. And we understand the concern and the general idea that PRAs need to have incorporated some amount of plant-specific operational experience before we use them extensively in applications. Just, however, I just wanted to note that there are, and I think this came up at one point this morning, there are some risk applications that are not voluntary and that all new plants would apparently be using from day one. And that includes the maintenance rule, both the monitoring part of the maintenance rule as well as the (a)(4) part of the maintenance rule that was discussed today. Both of those are dependent to some degree on a PRA. And then we have of course the reactor

oversight process, both the significance determination process and the performance indicators such as the MSPI also rely on PRA. And I guess I haven't heard the staff express the same types of reservations with regard to the ability to commence those applications but it would seem they would be subject to some of the same general considerations. And I guess my only note and especially with regard to some of these things like risk-informed ISI which you know I would certainly like to think there are maybe some things we could start without having to wait for years after initial operation. So I guess my only question to pose sort of for the staff is whatever accommodations or rationalizations you're making to allow these other types of applications to proceed initially maybe there's some way to extend those or consider those same reasons when we come into some of these voluntary applications. Just a question. And we do recognize the general concern of the need for operational experience.

CHAIR STETKAR: Biff, have you thought much, and you know, when we discussed it this morning, this notion of we need operational experience. If you look at a lot of the components in the new design this is no different motor-operated valve in new plant X

versus motor-operated valve in existing plant Y. Same is by and large true for diesel generators and a large number of the -- some are different. Gas turbine generators are different than diesel generators. Very large squib valves are different than, you know, air-operated valves for example. I was curious, and I'm sure that you're having discussions with the staff about this issue otherwise it wouldn't be on the slide right now but have you discussed, you know, what is enough operational experience? I mean, it's not a year certainly, probably not even a couple of years realistically if you look at typical failure rates of things. So the question is if you wait for operational experience what's an appropriate amount of time? And are you pursuing those discussions? Or not?

MR. BRADLEY: We have not explicitly pursued that particular subject yet. And there's a related activity which is the expectation that new plants need to meet Reg Guide 1.200 prior -- as it's effective one year prior to operation. And then there's some work under way in the standards community to look at what elements of that standard endorsed by 1.200 can you reasonably meet or not meet given that you don't have operational data. Of course we also,

you know, use a lot of generic data in PRAs and so, but to directly answer your question we have not engaged explicitly on how much operational experience is enough and I would think this might come up when we get into the ROP which is a mandatory. It's not voluntary, it's not like most of the other things we've looked at here. So that, but I think that's a good point.

CHAIR STETKAR: I was just curious because you know, when you talk about it it's always a good thing to you know take advantage of operational experience. But the notion of essentially the implicit notion is well, we need to delay the implementation of a certain program until we have enough operating experience to give us confidence. That then begs the question of what is enough.

MR. BRADLEY: Yes.

CHAIR STETKAR: For 60 years you have enough operating experience.

MR. BRADLEY: But you're right. Hopefully the failure rates are low. We're not, you know, so in order to get statistically meaningful results it could, one could argue it could take awhile. But you know, we need to --

CHAIR STETKAR: I was just trying to pulse

you to see where, because you did raise that on this slide, so.

MR. BRADLEY: Yes. We'll bring this up as we proceed into ROP space and try to flesh out a little more detail.

CHAIR STETKAR: I actually think it's more of an issue in ROP than.

MR. BRADLEY: Yes, it's really -- maintenance rule is the only, of the things we talked about this morning maintenance rule is the only one that would apply. It's not voluntary, it applies to all plants.

CHAIR STETKAR: Even the sense of a voluntary program that there's a notion of you can't implement until you have enough operating experience to justify the numbers.

MR. BRADLEY: I thought the staff did a fine job discussing initiative 4b. In reviewing NRC's meeting summaries I think of all the things we looked at 4b was the only one where there was some discussion of maybe we did need to possibly enhance some elements of the guidance. And I'm not averse to the concept of trying to better define safety function. I think to some degree this has come up even in operating plant space. Andy alluded to it you know with his

discussion on the standby liquid control system for a BWR. You know, depending on if you define safety function as reactivity control one could argue you still had safety function. But right now safety function is defined on an LCO basis which is clear and understandable and maybe correct but you know, I think there could be value in having further discussion.

My only little caveat I guess about considering changes to the guidance, we do have an operating plant proceeding to 4b, Vogtle, and I don't want to do anything to upset the apple cart too much in the middle of their efforts to transition. I don't really think this would happen but that's my only caveat. If we are going to look at the guidance for 4b, and this is all preliminary because NRC's not even going to give their final recommendations on this till later this year, but hopefully there would be a way to do it in parallel with the Vogtle activity and not putting some kind of a roadblock into that. I actually you know believe 4b is a better set of tech specs than what we have with standard tech specs. You know, not that there isn't a lot of good stuff in the STS but 4b, I mean I guess I'm surprised that the NRC staff didn't encourage it more strongly. I just think it's a better way to run a plant, especially a new

plant that has a Reg Guide 1.200 PRA requirement for a full scope and high-quality PRA. It just seems like a no-brainer that 4b should be used. And we talked about the fact that the existing tech specs are not perfect and you know, that's the alternative to 4b. And so 4b I think deserves that consideration.

So, the final slide. Again, the SRM you know, we think there's a reasonable direction to the staff to look at the guidance, but in general to try to stay within the existing framework for risk-informed decision-making. I think the tabletops have been very effectively conducted. We've had good representation from the industry and NRC has done an excellent job orchestrating everything and summarizing the results. And I think it's been a rigorous exercise and we really, you know, I wish I could come here and say this more often. I really don't have a lot to disagree with. Substantively I think our conclusions are in accord with what NRC has presented today. I do believe you know as I mentioned the ROP may be a little more interesting. There are a lot of -- it gets a lot of visibility and it'll, that'll be an entertaining discussion. But hopefully we can get through that with the same level of effort and outcome that we have up to now. So we'll do our best to

continue our participation in this and we do have a pretty good lineup of plants to support the ROP. We're outrunning a bunch of test cases right now on actual events and actually completed a few of those already. So I guess that completes all I had to say. I think this has been a successful and good outcome so far.

MEMBER BLEY: So Biff, now that we've done the technical stuff I have two non-technical questions for you.

MR. BRADLEY: All right.

MEMBER BLEY: One is I've looked all over. I can't figure out where 4b and 5b come from. Were those out of a list of initiatives laid out in some industry document?

MR. BRADLEY: Yes.

MEMBER BLEY: I can't find them.

MR. BRADLEY: Way back, this is I'm thinking back to early '90s. This was actually begun many years ago by the, what used to be the CE Owners Group. It doesn't exist anymore. It was absorbed into the Westinghouse Owners Group and there was -- but initially we identified a set of initiatives. I think there may have been six or seven. I don't know if some others may be here that remember this.

Initiative 1, I'm not going to go through the whole list --

MEMBER BLEY: No, no. I've been looking all over to figure out where it came from and I wasn't able to find it.

MR. BRADLEY: Some of them were sort of low-hanging fruit kind of simple things. 4b and 5b were the ones where we knew we had to have the PRA pedigree, the standards. These were the bigger picture initiatives where we were trying to make holistic changes to the tech specs. So those were the last to come along. But we've implemented one which was, we had mode restraints initiative, the missed surveillance initiative. I'm drawing a blank on what initiative 2 was now.

MEMBER BLEY: That's okay. I just wanted to nail them down.

CHAIR STETKAR: You have to come up here.

MR. BRADLEY: Initiative 1 was being able to go to hot shutdown instead of cold shutdown. Initiative 2 was don't shut the plant down if you miss a surveillance. Initiative 3 was you can change modes within certain constraints if you're in an LCO or entering a mode of applicability of that LCO. And then we have Initiative 4a which is just single

completion time extensions versus the holistic 4b. Initiative 5, surveillance. Initiative 6 is 3.0.3, that's the loss of function initiative where we're actually trying to carve out specific loss of function situations and see if we could extend the completion time. There's been some limited approval, fairly limited. And then initiative 7 was the barriers, barriers and snubbers initiative.

But we're pretty much at the end of our list now. We've actually achieved completion and we're now trying to achieve widespread implementation. 5b is well along the way and 4b, really looking forward to getting the Vogtle case through. STP has 4b, but getting another plant beyond STP is critical. The industry likes to see that someone other than STP can achieve success and then you tend to get the herd effect.

CHAIR STETKAR: Well, it's only because STP is sort of for those of you who don't know the plant design, they have three trains basically of things most of the other folks don't. So extending it to a more typical-looking plant is important.

MEMBER BLEY: Thank you. The other one was I understand in military arena and security arena how tabletop evolved as opposed to force on force

activities. I don't know why these are tabletops rather than pilots or trials or something so tell me.

MR. BRADLEY: I will defer -- that decision was made by the NRC staff and that terminology came from there.

MEMBER BLEY: Okay. I asked the wrong person on that one.

MR. BRADLEY: We, you know, we did have a tabletop here even I think in this room once but that's the only thing I know.

MEMBER BLEY: So you talked over these trials over a table. Okay, good enough. Thanks.

CHAIR STETKAR: Anything else for Biff from any of the members? If not let me do two things.

MEMBER BLEY: Okay. Are you going to go around?

CHAIR STETKAR: I am, but first I'm going to ask for public, if there are any public comments. And I guess we should open up the bridge line. While we're doing that is there any member of the public here? If you're hiding behind the column. Seeing none I'll wait. I understand -- oh, there is. Excellent.

MR. BYWATER: Hello, Mr. Chairman. My name is Russ Bywater. I work for Mitsubishi, also

here representing our client Luminant, COL applicant for Comanche Peak Units 3 and 4. And we understand we'll be here next month to brief the US APWR subcommittee on the application for using initiatives 4b and 5b in the Comanche Peak COLA. So we'll be eager to answer your questions and present our methodology to you then with the staff.

CHAIR STETKAR: That's great. We're really looking forward to that. As I said, as you mentioned it's US APWR but it's the two subcommittees. So that will be a very informative presentation I'm sure. Is the bridge line? If there's anyone out there listening please just utter some sound so that we know that the bridge line is open. Thank you, that's good enough. we know it's open now. Are there any members of the public who wish to make a statement or anyone who's on the bridge line that would like to say anything? Hearing nothing I assume that's a negative response so thank you very much. If we can re-close the bridge line just so that we don't hear the noise in the background. Appreciate that.

And now what I'd like to do is go around the table and ask for two things. Number one, if anyone has any final comments or questions on anything we've heard today. And number two, if anyone believes

that -- I'd like to get some input from anything that we've heard today is there a need to bring it to the full committee at this stage in the game in the sense that you know something for full committee attention that we may want to write an interim letter. So I'll start with the most senior and esteemed member.

MEMBER ABDEL-KHALIK: I don't have any additional comments and I don't think there's anything at this stage that would be necessary to bring to the full committee.

CHAIR STETKAR: Okay. Dick?

MEMBER SKILLMAN: Nothing, thank you.

CHAIR STETKAR: Dennis.

MEMBER BLEY: Nothing to bring to the full committee but I do want to comment since I raised the issue earlier on this idea of needing more experience before we can start using some of these methods. I don't quite understand that. I think the engineering judgment criteria they put in place to control the process as well as the requirements for monitoring are more than adequate. And I don't think there's an alternative that'll give us a better way to address these issues than those that were described here today. So I just don't see a reason to hold back. I mean, the equipment, the materials, as Bill said, you

know, it's the same materials. We may get some surprises but not doing this doesn't help us in any way that I can see so I just don't understand that part. I'd like to see it go on ahead.

CHAIR STETKAR: Thank you. Bill?

MEMBER SHACK: I'll echo Dennis.

CHAIR STETKAR: Okay. Joy?

MEMBER REMPE: And I guess I'd echo Said and Dick. I don't have any additional comments and I don't see a need to take it to the full committee.

CHAIR STETKAR: Okay, thank you very much. I also echo Dennis's sentiments that I think when we do have the subcommittee presentation in the spring and certainly before the full committee if there's this notion of delay the implementation of this process until we've accumulated enough operating experience I think that you may want to think about explaining some more of the rationale behind that.

If nothing else again I'd like to thank the staff very much. I really appreciate the time and effort you put into putting the presentations together. I know it takes quite a bit of effort to compile all of that information into a coherent presentation. And you did really, really well, I appreciate that.

MEMBER SHACK: The meeting summaries were quite good too, actually.

MEMBER BLEY: Yes.

MEMBER SHACK: I've read meeting summaries that don't tell me anything and then I've read meeting summaries that are actually informative and this was the informative.

CHAIR STETKAR: And I'd like to thank EPRI and -- who's left and NEI. Bring Pat for something and let him off.

MR. BYWATER: We'll let him know you thanked him.

CHAIR STETKAR: Okay. And with that we are adjourned.

(Whereupon, the foregoing matter went off the record at 2:30 p.m.)

U.S.NRC

UNITED STATES NUCLEAR REGULATORY COMMISSION

Protecting People and the Environment

INFORMATIONAL BRIEFING ON SRM TO SECY-10-0121, "MODIFYING THE RISK-INFORMED REGULATORY GUIDANCE FOR NEW REACTORS"

Advisory Committee on Reactor Safeguards Subcommittee on Reliability and PRA

Contacts: Donald Dube, Office of New Reactors, (301) 415-1483
Eric Powell, Office of New Reactors, (301) 415-4052

September 20, 2011

Meeting Purpose

Provide information on progress regarding the staff's activities in response to the SRM on SECY-10-0121

Agenda

- Background on SECY-10-0121 and SRM
- Tabletop exercises
  - Risk-informed inservice inspection of piping
  - Risk-informed technical specification initiative (RITS) 5b (surveillance frequency control program)
  - Part 52 change process: ex-vessel severe accident design features
  - RITS 4b (completion times) and Maintenance Rule 50.65(a)(4)
- Next steps
- Stakeholder inputs

Background

- **A number of risk-informed applications for new reactors are proposed including**
  - EPRI research program on Risk-informed ISI
  - RITS 4b & 5b (Comanche Peak 3 & 4 COLA)
  - 50.69
- **White paper dated February 12, 2009 discussed concerns, particularly on the Reactor Oversight Process (ROP)**
- **SECY-10-0121 dated September 14, 2010 provided options for Commission vote**
- **Commission briefing October 14, 2010**
- **SRM March 2, 2011**

Contents of SECY-10-0121

- Four major change processes and guidance
- Previous Commission expectations, policy papers, and Part 52 regulations
- Issues related to risk-informed changes to licensing basis and ROP
- Interactions with stakeholders
- Options and staff recommendation

Options Provided in SECY-10-0121

1) No changes to existing risk-informed guidance (status quo)
2) Implement enhancements to existing guidance to prevent significant decrease in enhanced safety (NRC staff recommendation)
3) Develop lower numeric thresholds for new reactors

Commission SRM Dated March 2, 2011

- **Commission approved a hybrid of Options 1 and 2**
  - Continue existing risk-informed framework pending a series of tabletop exercises that test existing guidance

- **Commission "reaffirms" existing**
  - safety goals
  - safety performance expectations
  - subsidiary risk goals and associated risk guidance
  - key principles (e.g., RG 1.174)
  - quantitative metrics

SRM (cont.)

- **Commission expects:**
  - Advanced technologies in new reactors will result in enhanced margins of safety
  - As a minimum, new reactors have the same degree of protection of the public and environment as current generation LWRs
- **New reactors with these enhanced margins and safety features should have greater operational flexibility than current reactors**

U.S.NRC
UNITED STATES NUCLEAR REGULATORY COMMISSION
Protecting People and the Environment

Key Deliverables

- Brochure summarizing Commission policies and decisions regarding new reactor safety performance
- Guidance on 50.59-like process for new reactors under Part 52
- Tabletop exercises to test adequacy of existing guidance (risk-managed technical specifications (TS) , 50.69, and ROP specifically called out)
- Progress report every 6 months
- Commission paper with specific recommendations by June 2012

Staff's Approach

- Leverage current industry effort to revise NEI 96-07 to address new reactor change processes (new Appendix C)
- Prepare summary document/brochure with input from other NRC offices
- Leverage ongoing efforts in the review of US-APWR risk-managed tech specs
- Address 50.69 and RI-ISI early on
- Exercise SPAR models for AP1000 and ABWR to test certain maintenance configurations
- Compare ROP process outcomes for new reactor designs to current fleet
- Use insights from reactor designers for realistic plant modifications and licensing basis changes

Approach (cont.)

- Address large release frequency (LRF), including such options as its elimination as a risk metric, replacement by LERF, or transition from LRF to LERF by initial fuel loading
- Draft Commission paper early 2012 along with holding several ACRS briefings

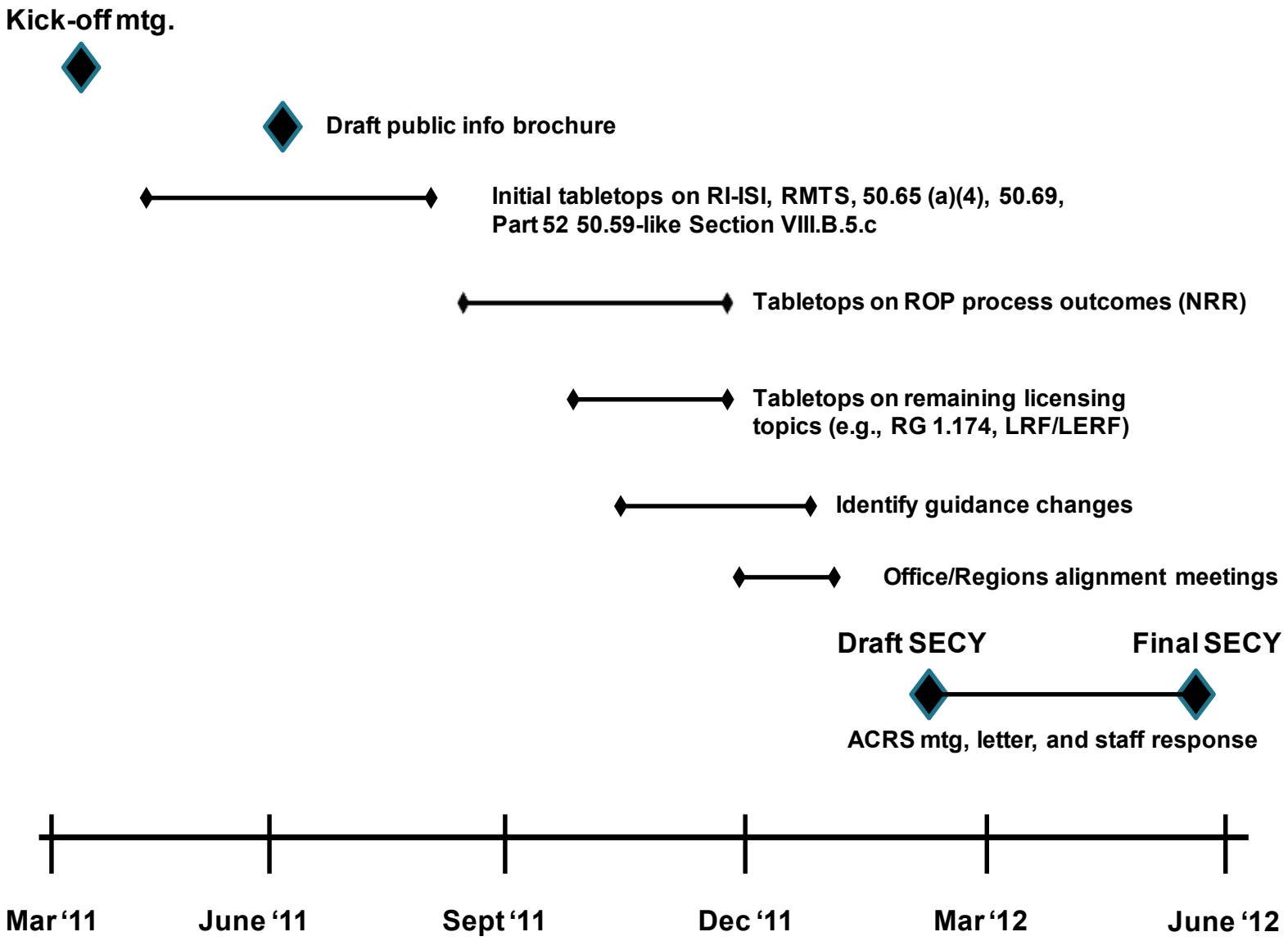

Figure 1. Approximate timeline

Steps Taken

- **Pre-SRM tabletop on changes to ex-vessel severe accident features, December 2, 2010**
- **Kickoff public meeting on SRM response, March 24, 2011**
- **Tabletops**
  - Risk-informed ISI, May 4
  - RITS 4b (completion times) and Maintenance Rule 50.65 (a)(4), May 26 & June 1
  - RITS 5b (surveillance frequency control program), June 29
  - 50.69 and 50.59-like process for new reactors, August 9
- **ROP tabletop preparation public meeting, August 25**
- **Summary-level public communication brochure drafted Spring 2011**

Tabletop Exercise on Risk-Informed Inservice Inspection of Piping (RI-ISI)

Overview of RI-ISI

- **Key methodology and guidance documents**
  - **WCAP-14572, Revision 1-NP-A (1999)**
  - **EPRI TR-112657, Rev B-A (1999)**
  - **ASME CC N716 *"Risk-Informed / Safety Based ISI"* (RIS_B)**
  - **RG 1.178 (RI-ISI)**
  - **RG 1.174 (risk-informed changes to licensing basis)**

- **At this point, new light-water reactors appear to be potentially interested in applying either the "traditional" or "streamlined" EPRI approach**

EPRI Traditional Methodology

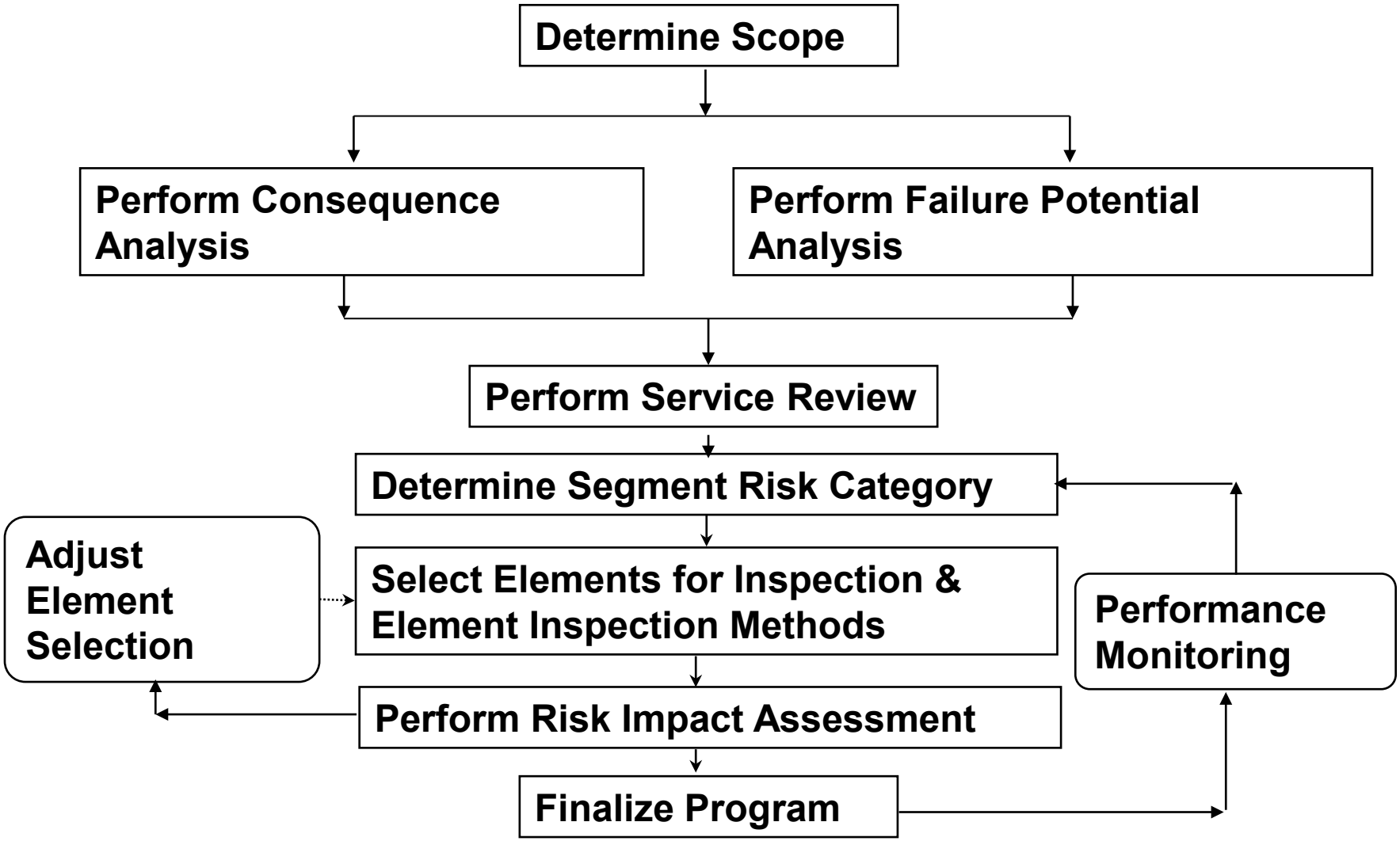

Source: EPRI, May 4, 2011 (Adams #ML111330452)

EPRI Risk Evaluation

Consequence Evaluation

Failure Potential Assessment *(Degradation Mechanism)*

DEGRADATION CATEGORY Pipe Rupture Potential	CONSEQUENCE CATEGORY CCDP and CLERP Potential			
	NONE	LOW	MEDIUM	HIGH
HIGH	LOW (Cat. 7)	MEDIUM (Cat. 5)	HIGH (Cat. 3)	HIGH (Cat. 1)
MEDIUM	LOW (Cat. 7)	LOW (Cat. 6)	MEDIUM (Cat. 5)	HIGH (Cat. 2)
LOW	LOW (Cat. 7)	LOW (Cat. 7)	LOW (Cat. 6)	MEDIUM (Cat. 4)

Source: EPRI, May 4, 2011 (Adams #ML111330452)

EPRI Degradation Mechanism Category

Pipe Rupture Potential	Expected Leak Conditions	Degradation Mechanisms To Which The Segment is Susceptible
HIGH	Large	Flow Accelerated Corrosion (FAC)
MEDIUM	Small	Thermal Fatigue Stress Corrosion Cracking (IGSCC, TGSCC, PWSCC, ECSCC) Localized Corrosion (MIC, Crevice Corrosion and Pitting) Erosion-Cavitation
LOW	None	No Degradation Mechanisms Present

Source: EPRI, May 4, 2011 (Adams #ML111330492)

EPRI Consequence Ranking: Numerical Criteria

Consequence Category	Corresponding CCDP Range	Corresponding CLERP Range
High	CCDP > 1E-4	CCDP > 1E-5
Medium	1E-6 < CCDP ≤ 1E-4	1E-7 < CCDP ≤ 1E-5
Low	CCDP ≤ 1E-6	CCDP ≤ 1E-7

Source: EPRI, May 4, 2011 (Adams #ML111330492)

EPRI Delta Risk Impact: from ASME Section XI program to RI-ISI

Plant Level:

< 1E-06/yr CDF

< 1E-07/yr LERF

System Level:

< 1E-07/yr CDF

< 1E-08/yr LERF

Source: EPRI, May 4, 2011 (Adams #ML111330492)

Staff's Sampling from Past Licensing Submittals using EPRI Methodology

Plant	Submittal Date	Delta CDF/yr	Delta LERF/yr
Dresden 2,3	10/16/2000	3.14E-09	7.57E-10
ANO 1	06/11/2009	2.26E-09	4.53E-10
Shearon Harris 1	04/27/2005	7.43E-09	2.05E-10
Susquehanna 1	09/16/2003	8.27E-09	6.69E-09
Vogtle 1	04/15/2009	-3.66E-08	-3.66E-09
Calvert Cliffs	05/29/2002	-2.61E-08	-5.81E-09

Considerations Concerning RI-ISI Location Selection

- **Code Case N-560:** Number of elements to be volumetrically examined is 10 percent of the piping weld population, based upon the exceptional performance history of this class of piping
- **Code Case N-578:** Risk category 1,2, or 3, the minimum number of inspection elements in each category should be 25 percent of the total number of elements in each risk category. For risk category 4 or 5, inspect 10 percent of the total number of elements in each risk category.
- **Code Case N-716**: Identifies portions of systems that should be generically classified as high safety significant (HSS) at all plants. The licensee's PRA is subsequently used to search for any additional, plant-specific HSS segments that are not included in the generic HSS population. Section 4 in CC N-716 requires that 10 percent of HSS welds shall be selected for examination.

Scoping Calculations for New LWRs

- One reactor design with active safety features and one with passive features
  - Observed more differences between BWRs & PWRs of current fleet than between new active and passive designs
- Sensitivity study using one order of magnitude lower ΔCDF and ΔLERF acceptance criteria per RG 1.174
- For 3 & 4 train new reactor designs, find shift in inspection focus to common headers

EPRI's Scoping Calculations: Class 1 Welds Consequence Ranking

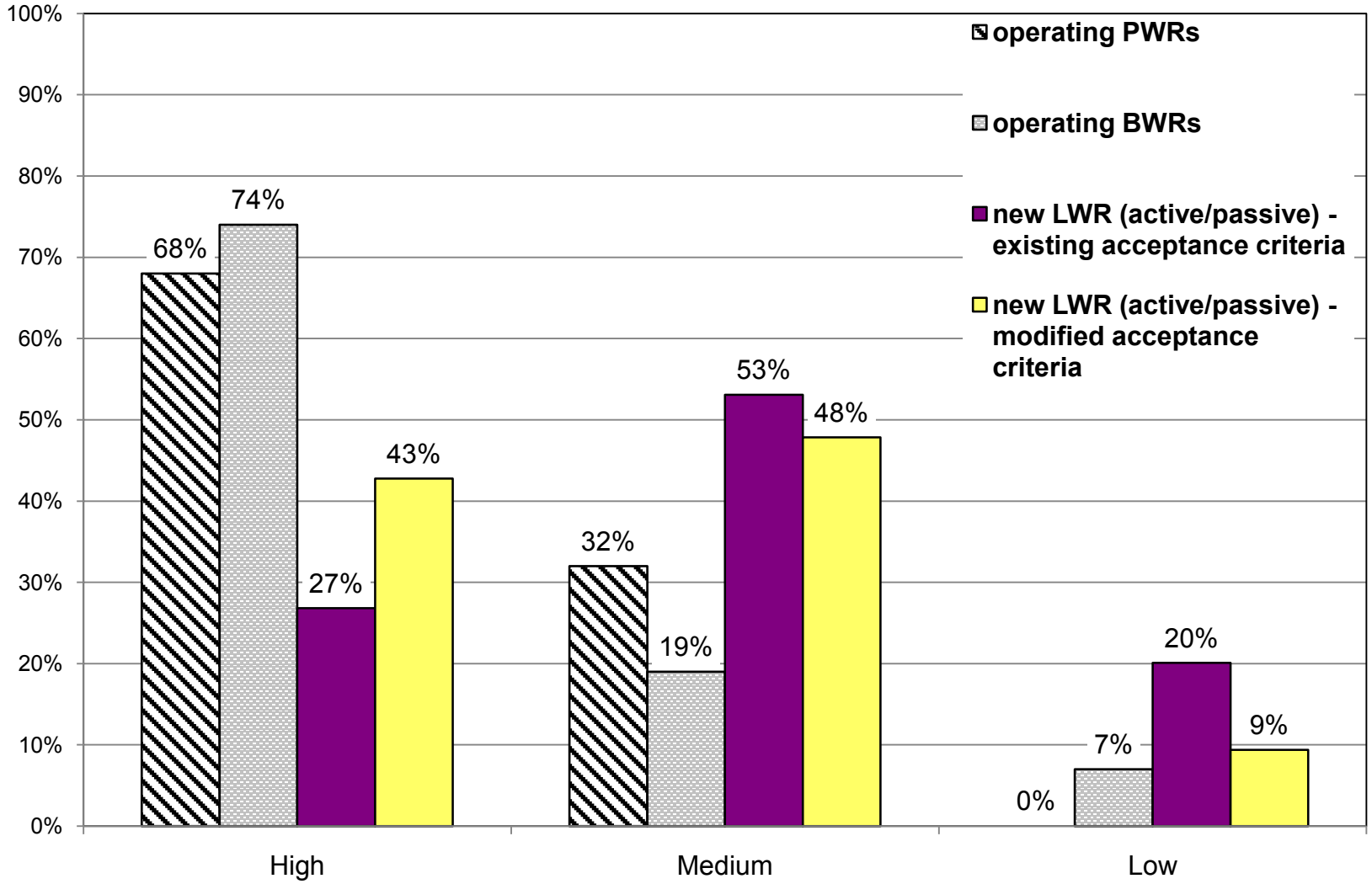

Source: EPRI, May 4, 2011 (Adams #ML111330492)

EPRI's Scoping Calculations: Class 1 Welds Risk Ranking

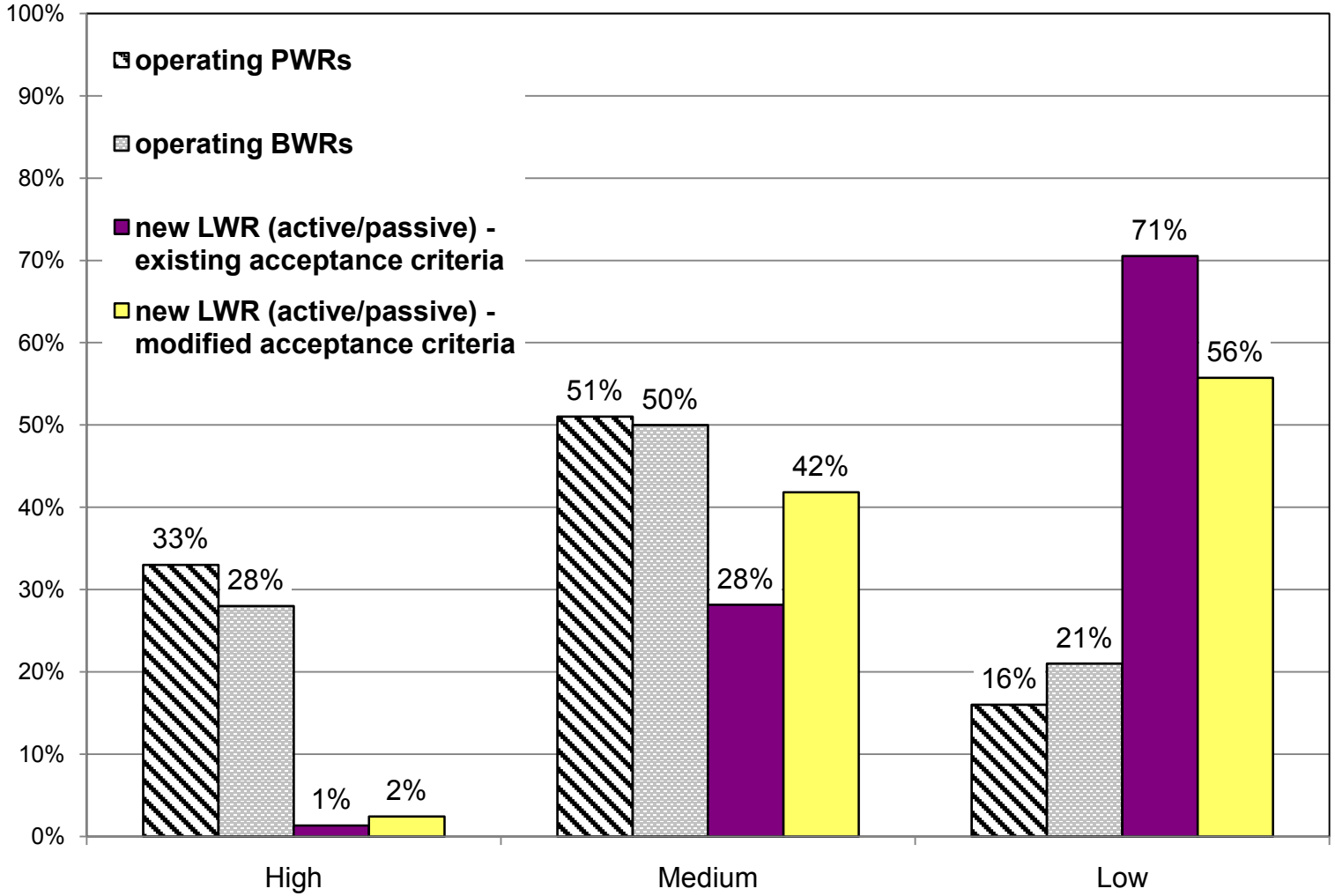

Source: EPRI, May 4, 2011 (Adams #ML111330492)

EPRI's Scoping Calculations: Delta Risk

Risk	DM	# of Section XI Inspections	# of RI ISI Inspections	Delta in Number of Inspections	CCDP	PBF Frequency per Weld [1/yr]	Delta Risk [1/yr]
High	TF	2	2	0	2.E-03	2.E-07	0.E+00
Medium	IGSCC/TF	4	2	2	1.E-04	2.E-07	4.E-11
Medium	None	34	14	20	1.E-04	1.E-08	2.E-11
Low	None	94	0	94	1.E-06	1.E-08	9.E-13
ACTIVE, Current AC - Average Case	Totals:	134	18	116			6.1E-11
		25.1%	3.4%				

Risk	DM	# of Section XI Inspections	# of RI ISI Inspections	Delta in Number of Inspections	CCDP	PBF Frequency per Weld [1/yr]	Delta Risk [1/yr]
High	TF	4	4	0	2.E-03	2.E-07	0.E+00
Medium	IGSCC/TF	7	3	4	1.E-04	2.E-07	8.E-11
Medium	None	68	28	40	1.E-04	1.E-08	4.E-11
Low	None	188	0	188	1.E-06	1.E-08	2.E-12
PASSIVE, Current AC - Average Case	Totals:	267	35	232			1.2E-10
		25.0%	3.3%				

Source: EPRI, May 4, 2011 (Adams #ML111330492)

Features and Regulatory / Programmatic Controls

- The guidelines on potential CDF and LERF increases imposed at a system level as well as the overall totals. This ensures that no one system absorbs most of the change in risk.
- Inspection of a minimum set of weld locations is required regardless of what the risk levels are calculated to be
- A number of programs remain in place to address degradation mechanisms such as flow accelerated corrosion and microbiologically induced corrosion

U.S.NRC
UNITED STATES NUCLEAR REGULATORY COMMISSION
Protecting People and the Environment

Features & Controls (cont.)

- Risk category 4 in the risk evaluation matrix was introduced in the EPRI methodology to address the unknowns with high consequence/low frequency phenomena
- Risk category 5 was introduced to ensure that some inspection is provided even if the consequences of certain pipe failures are identified as low
- The RI-ISI program requires updating the risk ranking, on average, every 3 and 1/3 years; this interval approximates the Part 52 requirement for periodic upgrade of the plant-specific PRA

Preliminary Results on RI-ISI

- Risk-neutral effect for a new active plant and a new passive plant, even when sensitivity studies used more restrictive acceptance criteria
- Numerous regulatory and programmatic controls
- Consensus that RI-ISI would not result in any significant decrease in enhanced safety
- Potential regulatory and implementation issues, for example
  - Lack of operating experience
  - A new plant could not begin with RI-ISI.
    A conventional ISI program per 50.55a is a requirement to implement RI-ISI

U.S.NRC
UNITED STATES NUCLEAR REGULATORY COMMISSION
Protecting People and the Environment

Tabletop Exercise on Risk-Informed Technical Specifications Initiative (RITS) 5b: Surveillance Frequency Control Program (SFCP)

Overview of RITS 5b

- **Key methodology and guidance documents**
  - **NEI 04-10, Risk-Informed Technical Specifications Initiative 5b, Risk-Informed Method for Control of Surveillance Frequencies, Revision 1, April 2007**
  - **RG 1.177 (risk-informed technical specifications)**
  - **RG 1.174 (risk-informed changes to licensing basis)**

- **At least one new light-water reactor vendor and one combined license applicant have expressed interest in applying 5b**

- **Risk increase assumption: failure probability derived entirely from standby failure model ½ λT**

Benefits of RITS 5b

- Optimize surveillance frequencies
- Maximize equipment availability
- Increase equipment life
- Maintain technical specification requirements
- Enhance safety

NEI 04-10 Methodology

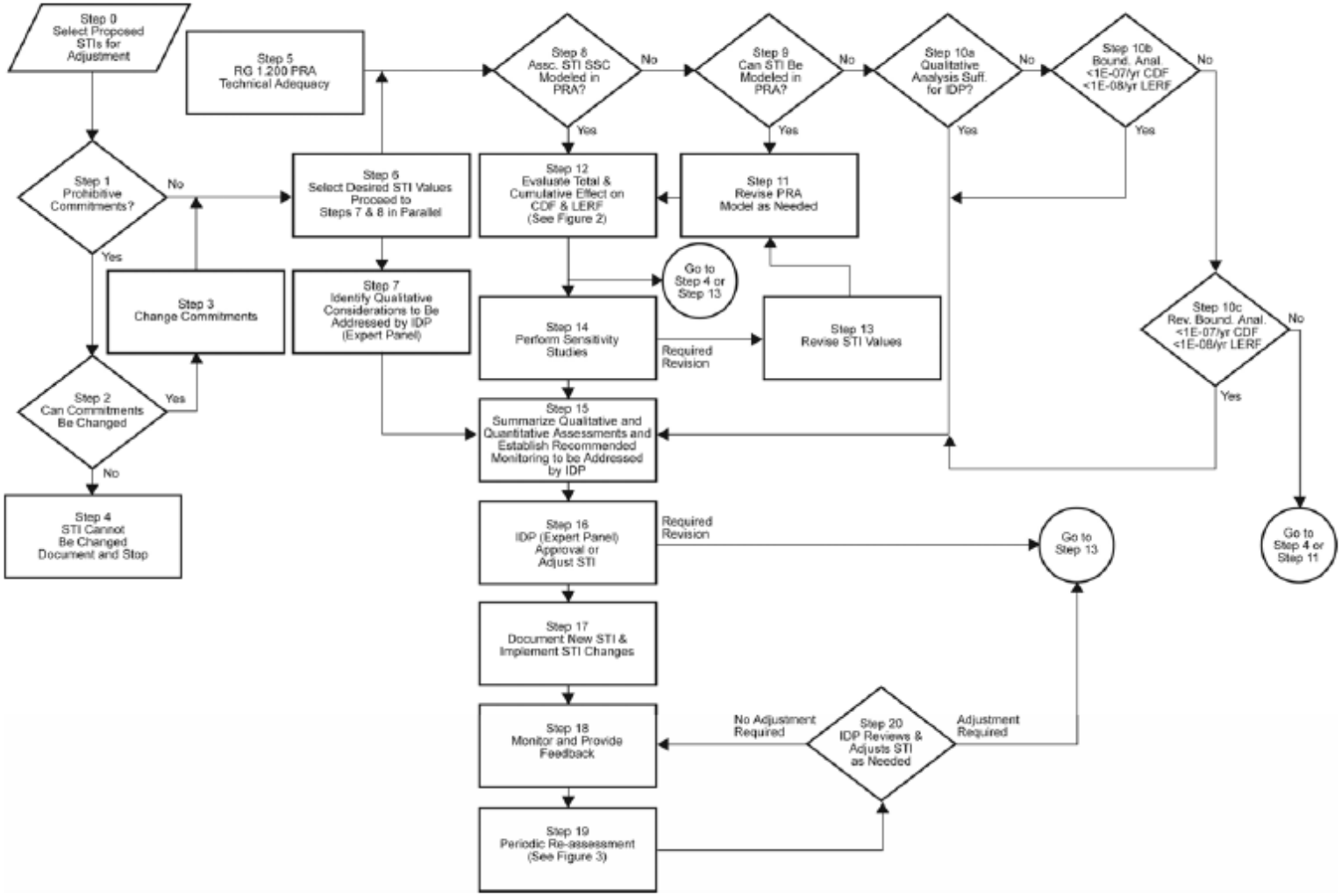

Figure 1. Surveillance Frequency Control Program Change Process

U.S.NRC
UNITED STATES NUCLEAR REGULATORY COMMISSION
Protecting People and the Environment

Process in Brief

- Select a candidate for new surveillance frequency
  - Frequent testing/resource burden, equipment wear
- Propose new frequency
- Evaluate proposed change
  - Commitments, reliability, unavailability, industry and plant-specific operating experience
- Review and approve
- Implement
- Monitor

NEI 04-10: Key Steps in Feedback Loop

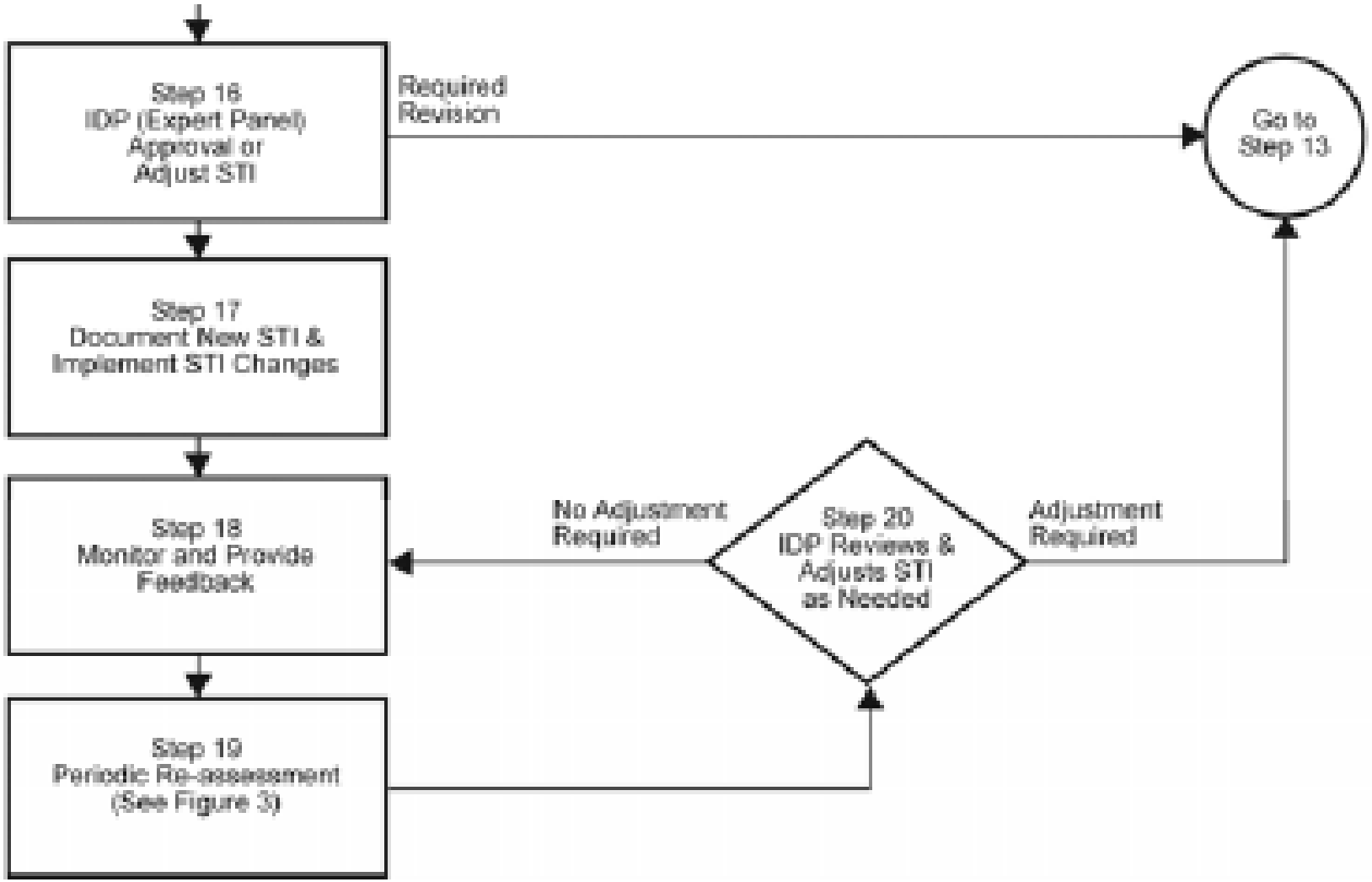

Experience and Insights from Current Fleet

- About 40% or operating reactors are approved for 5b
- Integrated decision-making panels' (IDP) review is key
  - Have rejected many proposed changes based on deterministic considerations
- Risk assessments used whenever possible, but many changes do not lend themselves to precise risk calculation (bounding, qualitative)
- Test intervals changed in phases, for example:
  monthly → quarterly → annual
- Appropriate performance monitoring criteria need to be set
- Need consistently good performance baseline before moving on to longer test intervals

Considerations for New Reactors

- Need adequate operating experience
  - Assess applicability of equipment performance from operating fleet
  - May be several operating cycles before adequate confidence on baseline performance in new reactors is achieved

Scoping Calculations for New PWR

- **Observation that many key PRA components fall under IST and not subject to 5b**
- **Sensitivity studies**
  - Battery testing: increased STI and hence failure rate 4x including CCF: $\Delta CDF \sim 10^{-8}$ /yr, $\Delta LERF \sim 10^{-8}$ /yr
  - Surveillance that power removed on MOV for core cooling (3x): $\Delta CDF \sim 10^{-9}$ /yr, $\Delta LERF \sim 10^{-12}$ /yr
  - RHR isolation valve power removed (3x): $\Delta CDF \sim 10^{-7}$ /yr, $\Delta LERF \sim 10^{-8}$ /yr
  - Diverse actuation system (DAS) manual control (2x): $\Delta CDF \sim 10^{-9}$ /yr

Features and Regulatory / Programmatic Controls

- Surveillance frequencies controlled by other programs are excluded from the SFCP
  - Equipment covered by inservice testing, for example major pumps and valves, tend to have some of the highest risk importances but are excluded
  - What remains to be implemented under RITS 5b generally are lower risk importance components
- The integrated decision-making panel's (IDP) review of proposed changes strengthens the process
  - Broad range of expertise
  - Some licensees include additional approvals such as the plant operations review committee, and the oversight review board

Features & Controls (cont.)

- Monitoring and feedback, and periodic re-assessment are fed back to the IDP
  - Actual changes in the reliability of equipment modeled in the PRA are included in the periodic updates
  - Unacceptable equipment performance could result in returning the surveillance frequency to the previous setting
- Impact of changes on defense in depth, Maintenance Rule, the mitigating systems performance index, and other programs are assessed
  - These programs may limit the scope of RITS 5b changes because of the potential to reduce operational and safety margins

Features & Controls (cont.)

- The phased approach whereby surveillance test intervals are gradually increased from, for example, monthly to quarterly to annual assures that failure rate changes are identified and addressed before becoming unacceptably high

Preliminary Results on RITS 5b

- Numerous regulatory and programmatic controls
- Unlike RITS 4b, RITS 5b is much more deterministically oriented, with risk impact only a secondary consideration in the criteria for changing surveillance test interval
- Need for sufficient baseline operating experience on affected equipment during the initial cycle(s) of reactor operation before commencing full implementation of RITS 5b in the new plants

Tabletop Exercise on Part 52 Change Process: Ex-Vessel Severe Accident Design Features, Section VIII.B.5.c of the Design Certification Rule

Background

- NEI 96-07, Guidance on 50.59, new Appendix C regarding Part 52 change process, for example:
  - Departures from Tier 1, Tier 2, and Tier 2*
  - Effect on design basis accidents
  - Aircraft impact assessment
  - Assessment of loss of large areas
  - Tier 2 changes to ex-vessel severe accident (EVSA) design features
- Staff internal workshop on changes to EVSA design features August, 2010
- Public workshop on EVSA December 2, 2010
- Public meeting on EVSA draft guidance Aug 9, 2011

From Part 52 App. A (ABWR)

- **VIII.B.5.c. A proposed departure from Tier 2 affecting resolution of an ex-vessel severe accident design feature identified in the plant-specific DCD, requires a license amendment if:**

  (1) There is a substantial increase in the probability of an ex-vessel severe accident such that a particular ex-vessel severe accident previously reviewed and determined to be not credible could become credible; or

  (2) There is a substantial increase in the consequences to the public of a particular ex-vessel severe accident previously reviewed.

What is an EVSA Design Feature?

Per the Statement of Considerations for the ABWR Final Rule, the change process for EVSA applies only to "severe accident design features, where the intended function of the design feature is relied upon to resolve postulated accidents when the reactor core has melted and exited the reactor vessel and the containment is being challenged"

EVSA Design Feature (cont.)

"In addition, the Commission is cognizant of certain design features that have intended functions to meet 'design basis' requirements and to resolve 'severe accidents.' These design features will be reviewed under either VIII.B.5.b or VIII.B.5.c depending upon the design function being changed."

10 CFR 52.47(a)(23)

Design certification document to address challenges to containment integrity caused by:

- **core-concrete interaction**
- **steam explosions**
- **high pressure core melt ejection**
- **hydrogen combustion, and**
- **containment bypass***

*** Consensus of workshop participants that design features that prevent or mitigate containment bypass events are <u>not</u> in and of themselves EVSA features, and as such may not fall under Section VIII.B.5.c criteria.**

Example EVSA Features

- Reactor cavity flooding to promote in-vessel cooling and retention of core debris
- Reactor vessel depressurization to promote in-vessel cooling and retention of core debris
- Reactor vessel depressurization to prevent high pressure melt ejection
- Reactor cavity flooding to provide ex-vessel cooling of core debris
- Reactor cavity design to enhance core debris spreading and coolability
- Containment overpressure protection
- Combustible gas control
- Containment sprays and heat removal

Example: US-APWR Tier 1 Fire Protection System Table 2.7.6.9-2

Design Commitment	Inspection, Tests, Analyses	Acceptance Criteria
6.b The FPS fire water supply is available to the containment spray system and water injection to the reactor cavity for severe accident mitigation.	6.b Inspection will be performed on the as-built FPS fire water supply.	6.b The as-built FPS fire water supply is provided to the containment spray system and water injection to the reactor cavity for severe accident mitigation.

Tier 1
2.11 Containment Systems

The fundamental design concept of the US-APWR for severe accident termination is reactor cavity flooding and cool down of the molten core by the flooded coolant water.

Reactor cavity flooding to enhance the cool down of the molten core ejected into the reactor cavity is achieved by the CSS, whose operation during a design basis accident is described in Subsection 2.11.3. Drain lines are used to drain spray water, which flows into the SG compartments, to the reactor cavity and cools the molten core. Fire protection system (FPS) water injection may also be used to inject water to the drain lines from the SG compartment to the reactor cavity. The FPS water supply is described in Subsection 2.7.6.9.1.

Tier 2
9.5.1 Fire Protection Program

9.5.1.2.2 Fire Protection Water Supply System

The fire water supply system is designed in accordance with the guidance of RG 1.189 (Ref. 9.5.1-12) and the applicable NFPA codes and standards. The fire protection water supply system is sized such that it contains sufficient water for two hours operation of the largest US-APWR sprinkler system plus a 500 gpm manual hose stream allowance to support fire suppression activities. Redundant water supply capability is provided. In addition to fire suppression activities, the fire protection water supply system may also supply water for severe accident prevention, for alternative component cooling water, and for severe accident mitigation for the containment spray system and water injection to the reactor cavity, if it is available.

Tier 2
9.5.1 Fire Protection Program

As discussed in Subsection 9.5.1.2, the fire pump arrangement provides two 100% capacity pumps. One is a diesel driven fire pump and the other is an electric-motor driven fire pump. One is designated as the lead fire pump. This system arrangement allows one pump to be out of service and still maintain the capability to provide 100% of the system flow requirements. An electric-motor driven jockey pump (or acceptable pressure source) is used to keep the fire water system full of water and pressurized, as required. Piping between the fire water sources and the fire pumps is in accordance with the guidance of NFPA 20 (Ref. 9.5.1-15). A failure in one water source or its piping cannot cause both water sources to be unavailable.

Tier 2
6.2 Containment

Fire Protection Water Supply System

Injection Line to Reactor Cavity

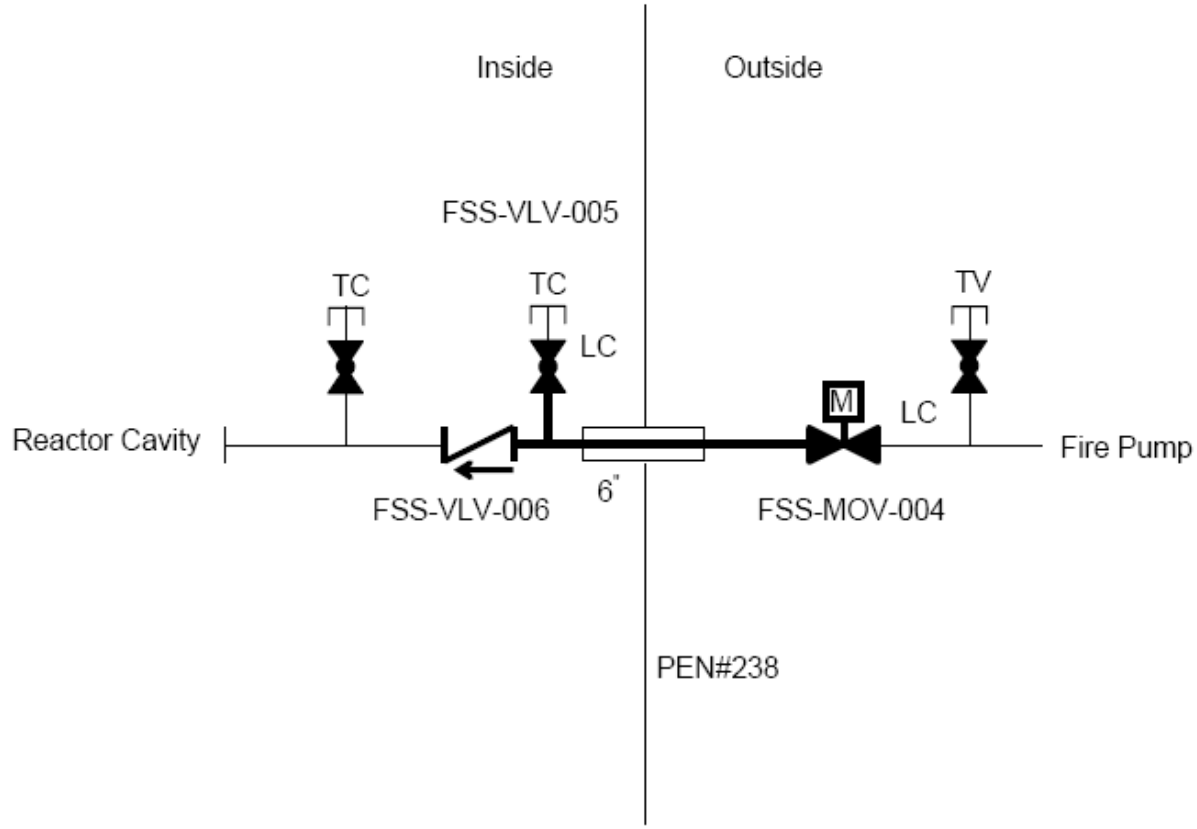

Considerations on Definitions of 'Substantial Increase'

- Qualitative, quantitative, or combination
- SRM on SECY-10-0121 strongly influenced staff's and stakeholders' decision to refrain from quantitative definition
  - 10% increase? 100% increase? 10x?
  - Concern with creating *de facto* new risk metric

Evaluation of 'Substantial Increase' in Probability

- Each design control document states whether and how each severe accident challenge to containment has been addressed, either qualitatively or quantitatively
- Terms used such as *not credible, practically eliminated*, *not physically feasible*, and *not relevant*
- A change that adversely affects the original basis for not being credible could be a 'substantial increase.' For example, for the U.S. EPR, the strategy is to convert high pressure core melt sequences into low pressure sequences:
  - "so that a high pressure vessel breach can be practically excluded… this is achieved through two dedicated severe accident depressurization valve trains"

Evaluation of 'Substantial Increase' in Public Consequences

- <u>Not</u> a substantial increase by demonstrating that the affected EVSA functions will still be successfully accomplished

- Substantial increase for departures that
  - remove, defeat or significantly degrade the performance of an EVSA design feature
  - containment performance goals in SECY-93-087 and SECY-90-016 would no longer be met

Example: Not Increase in Public Consequences

- Licensee identifies a nonconformance in that the thickness of a portion of the reactor cavity floor concrete is 0.1 foot less than the minimum thickness specified in Tier 2 of the referenced DCD

- Based on a comparison with the existing analysis, the licensee determines that the reduction in thickness would have a negligible impact on the functional performance of the reactor cavity floor in the presence of core debris (e.g., ability to maintain containment integrity for 24 hours)

Example: Increase in Public Consequences

- Licensee considers reducing the capacity of the containment venting system by 50%

- Licensee performs a calculation and determines that a 50% reduction would significantly degrade the containment venting function such that the containment may not be able to survive the pressures associated with the containment performance goals identified in SECY-93-087 and SECY-90-016, as approved by the associated Staff Requirements Memoranda, and described in NUREG-0800

Preliminary Results on EVSA Design Feature Change Process

- Efforts focused on definition and examples of "substantial increase" in probability and public consequences in NEI 96-07 Appendix C
- Certain severe accident features do not address "ex-vessel" conditions and appear not to be in-scope by the rule (e.g., features to prevent ISLOCA / containment bypass)
  - Fortunately, there are enough details in Tier 1 that such features can not be removed and significant design changes are precluded
- Staff generally satisfied with revised NEI 96-07 and has provided comments for clarification of draft guidance

Tabletop Exercise on Risk-Informed Technical Specifications (RITS) Initiative 4b and Maintenance Rule 50.65(a)(4)

Overview - RITS 4b and MR(a)(4)

- **Key methodology and guidance documents**
  - NEI 06-09, “Risk-Informed Technical Specifications Initiative 4b, Risk-Managed Technical Specifications Guidelines”
  - NUMARC 93-01, “Industry Guideline for Monitoring the Effectiveness of Maintenance at Nuclear Power Plants, draft Rev.4, Section 11”
  - AP1000 DCD, Section 16.3.1 (investment protection short-term availability controls)
  - ESBWR DCD, Section 19ACM (availability controls manual and bases)
- **ABWR SPAR Model Case Studies**
- **AP1000 SPAR Model Case Studies**
- **Vendor’s Calculational Results**
- **Maintenance Rule (a)(4)**

Case Study Assumptions - ABWR

- Only internal events at power
- CDF values are point estimates
- Truncation set at default, 1E-13
- All Test & Maintenance set to FALSE for all cases
- Equipment not functional, T&M set to TRUE

U.S.NRC
UNITED STATES NUCLEAR REGULATORY COMMISSION
Protecting People and the Environment

Description of Case Studies - ABWR

- 24 unique cases
- Equipment not functional (O.O.S.)
  - Electrical (EDGs and CTG)
  - ECCS (RCIC, HPCF, and LPFL)
  - Combination of Electrical + ECCS
  - Combination + ACIWA (FWEDP)

Electrical Connection to Equipment

Electrical			Other
CTG			
Division 1	**Division 2**	**Division 3**	
EDG-E	EDG-F	EDG-G	
	HPCF-B	HPCF-C	RCIC
LPFL-A	LPFL-B	LPFL-C	FWEDP

Configurations Modeled

Configuration

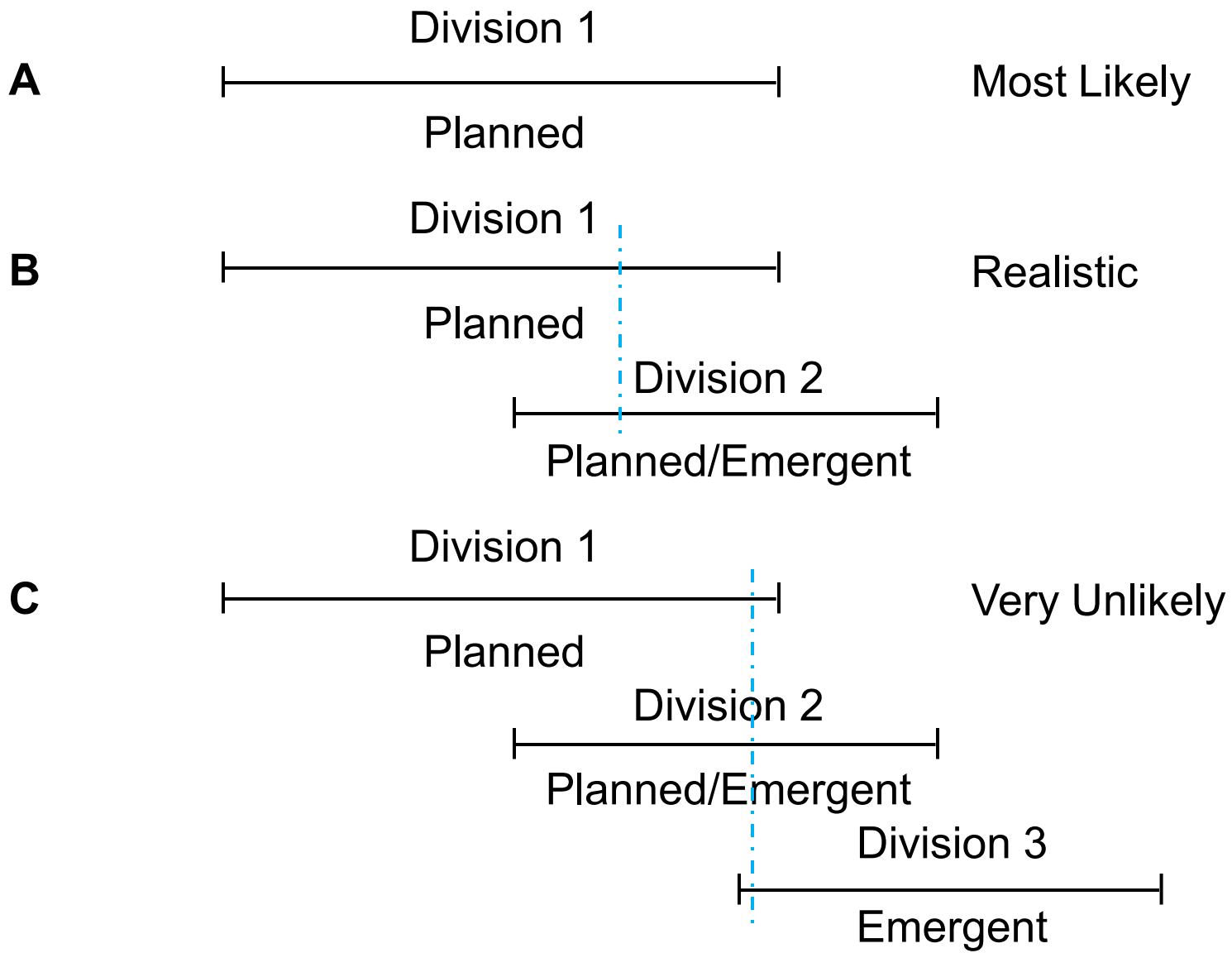

ABWR SPAR Model Results

RITS 4b Case	Equip. Not Functional	CDF	ΔCDF (per year)	Calc Completion Time (days)	Tech Spec Limit (days)	Allowed Completion Time (days)	ICDP	Other Available Equip
Base	None (no T&M)	2.6E-07	--	--	--	--	--	All
1	1 EDG-F	3.4E-07	8.3E-08	44135	14	30	6.8E-09	2 offsite AC power sources, 2 EDGs, and CTG
12*	RCIC and 2 HPCF-B/C	2.9E-04	2.9E-04	12	12 hr	[12 hr]	[4.0E-07]	3 LPFLs
21-A	2 EDG-F/G, 1 HPCF-B, 1 LPFL-A, and RCIC	4.9E-04	4.9E-04	7	EDG - 3 RCIC & 2 ECCS sub-sys. - 7	7	1.0E-05	2 offsite AC power sources, 1 EDG, and CTG; 1 HPCF and 2 LPFLs

Case Study Assumptions – AP1000

- Only internal events at power
- CDF values are point estimates
- Truncation set at default,1E-14
- All Test & Maintenance set to FALSE for all cases
- Equipment not functional, switchboards / distribution panels, valves, or T&M set to TRUE

U.S.NRC
UNITED STATES NUCLEAR REGULATORY COMMISSION
Protecting People and the Environment

Description of Case Studies – AP1000

- 18 unique cases
- Equipment not functional (O.O.S.)
  - Electrical (DCP and ACP)
  - PXS (CMT, Accum., IRWST, and PRHR)
  - Combination of Electrical + PXS
  - Non-safety systems and non-safety systems in combination with PXS equipment

U.S.NRC
UNITED STATES NUCLEAR REGULATORY COMMISSION
Protecting People and the Environment

IDS & PXS Equipment Used in Cases

Class 1E DC System (IDS)			
Division A	**Division B**	**Division C**	**Division D**
1 - 24hr Battery	1 - 24hr Battery	1 - 24hr Battery	1 - 24hr Battery
	1 - 72hr Battery	1 - 72hr Battery	

Passive Core Cooling (PXS)	
DVI Line A	**DVI Line B**
Accum.-A (CKV)	Accum.-B (CKV)
CMT-A (CKV)	CMT-B (CKV)
IRWST-A (MOV)	IRWST-B (MOV)
IRWST-A (CKV1)	IRWST-B (CKV1)
IRWST-A (CKV2)	IRWST-B (CKV2)

AP1000 SPAR Model Results

RITS 4b Case	Equip. Not Functional	CDF	ΔCDF (per year)	Calc Completion Time (days)	Tech. Spec./IP Limit (hrs)	Allowed Completion Time (days)	ICDP	Other Available Equip
Base	None (no T&M)	2.1E-07	--	--	--	--	--	All
1	1 - 1E-DCP-A (DC/AC)	5.9E-07	3.8E-07	9623	6	30	3.1E-08	1 - 24hr division and 2 - 24/72hr divisions
7*	1 IRWST Injection Line-B (MOV)	1.1E-04	1.1E-04	33	1	[1hr]	[1.3E-08]	2 Accums., 1 IRWST ILs (2 flow paths), 2 PHRHs, and 2 CMTs
9-A*	1 CMT-A (CKV) and 1 Accum.-A (CKV)	1.6E-04	1.5E-04	24	CMT - 1 Accum. - 1	[1hr]	[1.8E-08]	1 Accum., 2 IRWST ILs (4 flow paths), 2 PHRHs, and 1 CMT

Vendor's Calculational Results

- **U.S. EPR**
  - Low ICDP values (most required 30-day backstop)
  - Similar results as the ABWR SPAR cases
    - Significant amount of equipment out to reach 10^{-5} limit
- **ESBWR**
  - Very low ICDP values calculated
    - N-2 design philosophy
- **AP1000**
  - Westinghouse representative confirmed the staff's results using the SPAR models
- **APWR**
  - Similar results as the ABWR SPAR cases
  - LRF more limiting, not CDF

Features and Regulatory / Programmatic Controls

- The risk-informed completion time is limited to a deterministic maximum of 30 days (referred to as the backstop completion time) from the time the TS action was first entered
- Voluntary use of the risk-managed TS for a configuration which represents a loss of TS specified safety function, or inoperability of all required safety trains, is not permitted
- A license amendment request to implement RITS 4b is subject to staff review and approval, including the scope of the LCOs to which the program may be applied

Preliminary Results

- **RITS 4b**
  - Enhanced definition of “loss of safety function” in NEI 06-09 needed
    - Safety Function Determination Program, LCO 3.0.6, and examples
  - Staff expressed concern that, for a reactor with a baseline core damage frequency of 5E-7/yr, a one-time use of the current guidance for a maximum ICDP of 5E-6 would represent 10 years’ worth of core damage probability
  - With the configuration restricted to major equipment outages within one division (“realistic” based on current industry practice), followed by a single *emergent* equipment outage in a second division, staff calculated ICDPs in the low 1E-7 to low 1E-6 range
  - Stakeholders noted that existing standard TS provide fewer controls on the frequency of entering certain LCOs, especially risk significant configurations
  - Certain implementation and process issues may need to be addressed before implementing RITS 4b for new reactors

ABWR Case 22-B

ICDP = 5.8E-6*

Electrical			Other
CTG			
Division 1	**Division 2**	**Division 3**	
EDG-E	*EDG-F*	EDG-G	
	HPCF-B	*HPCF-C*	*RCIC*
LPFL-A	*LPFL-B*	LPFL-C	FWEDP

* 30 day backstop applied

Maintenance Rule 50.65(a)(4)

From NUMARC 93-01:

ICDP		ILERP
$> 10^{-5}$	- configuration should not normally be entered voluntarily	$> 10^{-6}$
$10^{-6} - 10^{-5}$	- assess non quantifiable factors - establish risk management	$10^{-7} - 10^{-6}$
$< 10^{-6}$	- normal work controls	$< 10^{-7}$

Maintenance Rule 50.65(a)(4) Applied to ABWR

Regular T.S. Cases

ICDP	Number of Cases
$> 10^{-5}$	1
10^{-6} - 10^{-5}	3
$< 10^{-6}$	21

RITS 4b Cases

ICDP	Number of Cases
$> 10^{-5}$	3
10^{-6} - 10^{-5}	6
$< 10^{-6}$	16

Maintenance Rule 50.65(a)(4) Applied to AP1000

Regular T.S. Cases

ICDP	Number of Cases
$> 10^{-5}$	--
10^{-6} - 10^{-5}	--
$< 10^{-6}$	21

RITS 4b Cases

ICDP	Number of Cases
$> 10^{-5}$	--
10^{-6} - 10^{-5}	--
$< 10^{-6}$	21

Preliminary Results

- **Maintenance Rule 50.65 (a)(4)**
  - When PRA approach is combined with other inputs such as the degree of defense in depth and plant transient assessment, factors other than PRA are often more limiting in terms of the risk management action level
  - NUMARC 93-01, Section 11 explicitly acknowledges “there is acknowledged variability in baseline core damage frequency and large early release frequency… determination of the appropriate quantitative risk management action thresholds are plant-unique activities”
  - Consensus that NUMARC 93-01, Section 11 on implementation guidance does not appear to need substantive change to address new reactor designs

Next steps

- October 5, 2011 public workshop:
  - RG 1.174 and LRF-to-LERF transition issues
  - ROP tabletops using SDP findings, MSPI inputs, and MD8.3 applications from current fleet
- Late fall 2011: identify ‘gaps’ in guidance
- February 2012: Draft Commission paper with recommendations
- February 2012: Public communications brochure complete
- March-April 2012: ACRS briefings
- Late May 2012: Commission paper for notation vote

Backup Slides

ABWR SPAR Model Results

RITS 4b Case	Equip. Not Functional	CDF	ΔCDF (per year)	Calc Completion Time (days)	Tech Spec Limit (days)	Allowed Completion Time (days)	ICDP	Other Available Equip
Base	None (no T&M)	2.6E-07	--	--	--	--	--	All
1	1 EDG-F	3.4E-07	8.3E-08	44135	14	30	6.8E-09	2 offsite AC power sources, 2 EDGs, and CTG
2	2 EDG-F/G	4.9E-06	4.6E-06	792	3	30	3.8E-07	2 offsite AC power sources, 1 EDG, and CTG
3*	3 EDG-E/F/G	2.3E-04	2.3E-04	16	Immediately begin shutdown	--	--	2 offsite AC power sources and CTG
4**	CTG	7.3E-07	4.7E-07	N/A	N/A	N/A	--	2 offsite AC power sources and 3 EDGs
5	2 EDG-F/G and CTG	8.6E-05	8.5E-05	43	Hot Shutdown in 12 hrs	30	7.0E-06	2 offsite AC power sources and 1 EDG
6	RCIC	4.7E-07	2.1E-07	17144	14	30	1.7E-08	2 HPCFs and 3 LPFLs
7	1 HPCF-B	4.8E-07	2.2E-07	16614	14	30	1.8E-08	1 HPCF, RCIC, and 3 LPFLs
8	2 HPCF-B/C	1.1E-05	1.1E-05	337	14	30	8.9E-07	RCIC and 3 LPFLs
9	RCIC and 1 HPCF-B	3.7E-06	3.4E-06	1066	14	30	2.8E-07	1 HPCF and 3 LPFLs
10	RCIC, 1 HPCF-B, and 1 LPFL-A	4.0E-06	3.8E-06	970	7	30	3.1E-07	1 HPCF and 2 LPFLs
11	2 HPCF-B/C and 1 LPFL-A	1.1E-05	1.1E-05	338	3	30	8.9E-07	RCIC and 2 LPFLs
12*	RCIC and 2 HPCF-B/C	2.9E-04	2.9E-04	12	12 hr	[12 hr]	[4.0E-07]	3 LPFLs
13	1 EDG-F and RCIC	7.3E-07	4.7E-07	7756	EDG - 14 RCIC - 14	30	3.9E-08	2 offsite AC power sources, 2 EDGs, and CTG; 2 HPCFs and 3 LPFLs

ABWR SPAR Model Results

RITS 4b Case	Equip. Not Functional	CDF	ΔCDF (per year)	Calc Completion Time (days)	Tech Spec Limit (days)	Allowed Completion Time (days)	ICDP	Other Available Equip
14	1 EDG-F and 1 HPCF-C	6.8E-07	4.3E-07	8542	EDG - 14 HPCF - 14	30	3.5E-08	2 offsite AC power sources, 2 EDGs, and CTG; RCIC, 1 HPCF, and 3 LPFLs
15	2 EDG-F/G and RCIC	1.5E-05	1.5E-05	241	EDGs - 3 RCIC - 14	30	1.2E-06	2 offsite AC power sources, 1 EDG, and CTG; 2 HPCFs and 3 LPFLs
16-A	1 EDG-F, 1 HPCF-C, and 1 LPFL-A	1.9E-06	1.6E-06	2246	EDG - 14 2 ECCS sub-sys. - 14	30	1.3E-07	2 offsite AC power sources, 2 EDGs, and CTG; RCIC, 1 HPCF, and 2 LPFLs
16-B	1 EDG-F, 1 HPCF-B, and 1 LPFL-B	6.0E-07	3.4E-07	10723	EDG - 14 2 ECCS sub-sys. - 14	30	2.8E-08	2 offsite AC power sources, 2 EDGs, and CTG; RCIC, 1 HPCF, and 2 LPFLs
17	1 EDG-F, 1 HPCF-C, and RCIC	7.1E-06	6.8E-06	537	EDG - 14 RCIC & ECCS sub-sys. - 14	30	5.6E-07	2 offsite AC power sources, 2 EDGs, and CTG; 1 HPCF and 3 LPFLs
18	1 EDG-F, 1 LPFL-C, and RCIC	8.6E-07	6.0E-07	6083	EDG - 14 RCIC & ECCS sub-sys. - 14	30	4.9E-08	2 offsite AC power sources, 2 EDGs, and CTG; 2 HPCFs and 2 LPFLs
19	1 EDG-F, 1 HPCF-C, 1 LPFL-A, and RCIC	1.8E-05	1.8E-05	202	EDG - 14 RCIC & 2 ECCS sub-sys. - 7	30	1.5E-06	2 offsite AC power sources, 2 EDG, and CTG; 1 HPCF and 2 LPFLs
20	2 EDG-F/G, 1 HPCF-B, and RCIC	1.9E-05	1.8E-05	198	EDG - 3 RCIC & ECCS sub-sys. - 14	30	1.5E-06	2 offsite AC power sources, 1 EDG, and CTG; 1 HPCF and 3 LPFLs

ABWR SPAR Model Results

RITS 4b Case	Equip. Not Functional	CDF	ΔCDF (per year)	Calc Completion Time (days)	Tech Spec Limit (days)	Allowed Completion Time (days)	ICDP	Other Available Equip
21-A	2 EDG-F/G, 1 HPCF-B, 1 LPFL-A, and RCIC	4.9E-04	4.9E-04	7	EDG - 3 RCIC & 2 ECCS sub-sys. - 7	7	1.0E-05	2 offsite AC power sources, 1 EDG, and CTG; 1 HPCF and 2 LPFLs
21-B	2 EDG-F/G, 1 HPCF-B, 1 LPFL-C, and RCIC	1.9E-05	1.8E-05	198	EDG - 3 RCIC & 2 ECCS sub-sys. - 7	30	1.5E-06	2 offsite AC power sources, 1 EDG, and CTG; 1 HPCF and 2 LPFLs
22-A	1 EDG-F, CTG, 1 HPCF-C, 1 LPFL-A, and RCIC	2.7E-04	2.7E-04	14	EDG - H.S. in 12hr RCIC & 2 ECCS sub-sys. - 7	14	1.0E-05	2 offsite AC power sources, 2 EDG; 1 HPCF and 2 LPFLs
22-B	1 EDG-F, CTG, 1 HPCF-C, 1 LPFL-B, and RCIC	7.1E-05	7.1E-05	52	EDG - H.S. in 12hr RCIC & 2 ECCS sub-sys. - 7	30	5.8E-06	2 offsite AC power sources, 2 EDG; 1 HPCF and 2 LPFLs
22-C	1 EDG-F, CTG, 1 HPCF-B, 1 LPFL-B, and RCIC	8.9E-06	8.6E-06	424	EDG - H.S. in 12hr RCIC & 2 ECCS sub-sys. - 7	30	7.1E-07	2 offsite AC power sources, 2 EDG; 1 HPCF and 2 LPFLs
23	2 EDG-F/G, 1 HPCF-C, RCIC, and FWEDP#	3.7E-05	3.7E-05	99	EDG - 3 RCIC & ECCS sub-sys. - 14	30	3.0E-06	2 offsite AC power sources, 1 EDG, and CTG; 1 HPCF and 3 LPFLs
24	2 EDG-F/G, 1 HPCF-B, 1 LPFL-A, RCIC, and FWEDP#	1.5E-03	1.5E-03	2	EDG - 3 RCIC & 2 ECCS sub-sys. - 7	3	1.3E-05	2 offsite AC power sources, 1 EDG, and CTG; 1 HPCF and 2 LPFLs

AP1000 SPAR Model Results

RITS 4b Case	Equip. Not Functional	CDF	ΔCDF (per year)	Calc Completion Time (days)	Tech. Spec./IP Limit (hrs)	Allowed Completion Time (days)	ICDP	Other Available Equip
Base	None (no T&M)	2.1E-07	--	--	--	--	--	All
1	1 - 1E-DCP-A (DC/AC)	5.9E-07	3.8E-07	9623	6	30	3.1E-08	1 - 24hr division and 2 - 24/72hr divisions
2	1 - 1E-DCP-B (2DC/AC)	5.9E-07	3.8E-07	9628	6	30	3.1E-08	2 - 24hr divisions and 1 - 24/72hr division
3#	2 - 1E-DCP-B/C (2-2DC/AC)	2.9E-06	2.6E-06	1379	2	30	2.2E-07	2 - 24hr divisions and 0 - 24/72hr division
4*	2 - IE-DCP-B/D (2DC/AC-DC/AC)	1.6E-03	1.6E-03	2	2	[2hr]	[3.6E-07]	1 - 24hr division and 1 - 24/72hr division
5	1 CMT-A (CKV)	5.2E-07	3.0E-07	12070	8	30	2.5E-08	2 Accums., 2 IRWST ILs (4 flow paths), 2 PHRHs, and 1 CMT
6*	1 Accum.-A (CKV)	4.2E-06	4.0E-06	907	8	[8hr]	[3.7E-09]	1 Accum., 2 IRWST ILs (4 flow paths), 2 PHRHs, and 2 CMTs
7*	1 IRWST Injection Line-B (MOV)	1.1E-04	1.1E-04	33	1	[1hr]	[1.3E-08]	2 Accums., 1 IRWST ILs (2 flow paths), 2 PHRHs, and 2 CMTs
8	1 IRWST Injection Line-A (CKV)	8.2E-07	6.1E-07	6000	72	30	5.0E-08	2 Accums., 2 IRWST IL (3 flow paths), 2 PHRHs, and 2 CMTs
9-A*	1 CMT-A (CKV) and 1 Accum.-A (CKV)	1.6E-04	1.5E-04	24	CMT - 1 Accum. - 1	[1hr]	[1.8E-08]	1 Accum., 2 IRWST ILs (4 flow paths), 2 PHRHs, and 1 CMT
9-B*	1 CMT-A (CKV) and 1 Accum.-B (CKV)	8.9E-06	8.7E-06	419	CMT - 1 Accum. - 1	[1hr]	[9.9E-10]	1 Accum., 2 IRWST ILs (4 flow paths), 2 PHRH, and 1 CMT

AP1000 SPAR Model Results

RITS 4b Case	Equip. Not Functional	CDF	ΔCDF (per year)	Calc Completion Time (days)	Tech. Spec./IP Limit (hrs)	Allowed Completion Time (days)	ICDP	Other Available Equip
10	1 CMT-A (CKV) and 1 IRWST Injection Line-A (CKV)	1.1E-06	8.6E-07	4250	CMT - 8 IRWST IL - 72	30	7.1E-08	2 Accums., 2 IRWST ILs (3 flow paths), 2 PHRHs, and 1 CMT
11-A	1 - 1E-DCP-B (2DC/AC) and 1 CMT-A (CKV)	7.9E-07	5.8E-07	6293	DCP - 6 CMT - 8	30	4.8E-08	2 - 24hr divisions and 1 - 24/72hr division; 2 Accums., 2 IRWST ILs (4 flow paths), 2 PHRHs, and 1 CMT
11-B	1 - 1E-DCP-A (DC/AC) and 1 CMT-A (CKV)	9.9E-07	7.8E-07	4683	DCP - 6 CMT - 8	30	6.4E-08	1 - 24hr divisions and 2 - 24/72hr division; 2 Accums., 2 IRWST ILs (4 flow paths), 2 PHRHs, and 1 CMT
12	1 - 1E-DCP-B (2DC/AC) and 1 IRWST Injection Line-A (CKV)	3.0E-06	2.8E-06	1317	DCP - 6 IRWST IL - 72	30	2.3E-07	2 - 24hr divisions and 1 - 24/72hr division; 2 Accums., 2 IRWST ILs (3 flow paths), 2 PHRHs, and 2 CMTs
13-A	1 - 1E-DCP-B (2DC/AC), 1 CMT-A (CKV), and 1 IRWST Injection Line-A (CKV)	3.4E-06	3.2E-06	1141	DCP - 6 CMT - 8 IRWST IL - 72	30	2.6E-07	2 - 24hr divisions and 1 - 24/72hr division; 2 Accums., 2 IRWST ILs (3 flow paths), 2 PHRHs, and 1 CMT
13-B	1 - 1E-DCP-A (DC/AC), 1 CMT-A (CKV), and 1 IRWST Injection Line-A (CKV)	3.3E-06	3.1E-06	1165	DCP - 6 CMT - 8 IRWST IL - 72	30	2.6E-07	1 - 24hr divisions and 2 - 24/72hr division; 2 Accums., 2 IRWST ILs (3 flow paths), 2 PHRHs, and 1 CMT
14	3 ADS (Stage 1, 2, 3 MOVs)	2.9E-07	8.0E-08	45398	3 ADS - 72	30	6.6E-09	7 ADS flow paths (stage 1, 2, 3, 4)

AP1000 SPAR Model Results

RITS 4b Case	Equip. Not Functional	CDF	ΔCDF (per year)	Calc Completion Time (days)	Tech. Spec./IP Limit (hrs)	Allowed Completion Time (days)	ICDP	Other Available Equip
15	1 SFW-A, 1 DGN-A, 1 CVCS-A, 1 NRHR-A, and DAS	2.2E-07	6.5E-09	561538	NRHR - 14d DAS - 14d DGN - 14d	30	5.3E-10	All PXS equipment
16	2 SFW-A/B, 2 DGN-A/B, 2 CVCS-A/B, 2 NRHR-A/B, and DAS	3.3E-07	1.2E-07	31223	DAS - 14d	30	9.6E-09	All PXS equipment
17	2 SFW-A/B, 2 DGN-A/B, 2 CVCS-A/B, 2 NRHR-A/B, DAS, and 1 PRHR-A (AOV)	3.5E-07	1.4E-07	26681	PRHR - 72 DAS - 14d	30	1.1E-08	2 Accums., 2 IRWST ILs (4 flow paths), 1 PHRH, and 2 CMTs
18	2 SFW-A/B, 2 DGN-A/B, 2 CVCS-A/B, 2 NRHR-A/B, DAS, and 1 CMT-A (CKV)	7.3E-07	5.1E-07	7093	CMT - 8 DAS - 14d	30	4.2E-08	2 Accums., 2 IRWST ILs (4 flow paths), 2 PHRHs, and 1 CMT

Review of Risk-Informed Regulatory Guidance for New Reactors

ACRS Reliability and PRA Subcommittee

September 20, 2011

Biff Bradley
reb@nei.org

NEI
NUCLEAR ENERGY INSTITUTE

Overview

- Staff Requirements Memorandum
- Industry perspective
- Tabletop Exercises for Risk Informed Guidance
- Preliminary Conclusions
- Next steps

NEI

March 2, 2011 Staff Requirements Memorandum

- The Commission reaffirms that the existing safety goals, safety performance expectations, subsidiary risk goals and associated risk guidance (such as the Commission's 2008 Advanced Reactor Policy Statement and Regulatory Guide 1.174), key principles and quantitative metrics for implementing risk-informed decision making, are sufficient for new plants.
- The staff should engage with external stakeholders in a series of tabletop exercises to test various realistic performance deficiencies, events, modifications, and licensing bases changes against current NRC policy, regulations, guidance and all other requirements (e.g., Technical Specifications, license conditions, code requirements) that are or will be relevant to the licensing bases of new reactors.

NEI

Industry Perspective

- Industry provided paper supporting use of existing risk framework for new plants
  - Existing Framework derived from Commission Policy (Safety Goal)
  - New plants have PRA requirement and should be encouraged to use risk applications
  - Use of risk applications at operating plants has led to better safety focus, and not led to risk increases
  - Seismic risk will be included in new plant modeled core damage frequency prior to operation

NEI

Tabletop Exercises

- Planned and conducted by NRC with stakeholder participation
- First: Licensing basis changes under Regulatory Guide 1.174
  - Will soon complete
- Next: Reactor Oversight Process
  - Just beginning

NEI

Licensing Tabletops

- May 4: Risk Informed Inservice Inspection
- May 26 and June 1: Risk Managed Technical Specifications Initiative 4B – Flexible Completion Times, and Maintenance Rule (a)(4) – Assessment and Management of Risk due to Maintenance Activities
- August 9: 10 CFR 50.69 and Ex Vessel Severe Accident Change Guidance
- October 5: Reg Guide 1.174 and LRF

NEI

Tabletop Observations

- Process was well thought out and effectively conducted
- Good stakeholder participation for both existing and new plant perspectives
- Scenarios and examples selected were reasonable, or noted when unrealistic
- Additional regulatory controls were identified beyond those directly in guidance
- NRC initial observations, as reported in meeting minutes, are reasonable

NEI

Observations

- Agree that in general, operational experience with new designs is necessary prior to implementing voluntary licensing applications
- However, some risk applications would be implemented at initial start up:
  - Maintenance Rule – monitoring and assessment and management of maintenance risk
  - Reactor Oversight Process – significance determination process, performance indicators
- Could the accommodations needed to support the mandatory uses of risk also provide for voluntary applications?

NEI

Observations

- Technical Specification Initiative 4B
  - Agree that better definition of "safety function" would be useful
  - Would be willing to entertain dialogue on process improvements for guidance
  - Believe that RITS 4B should be strongly encouraged for new and operating plants
  - Provides better safety focus than Standard Tech Specs, and incentive for improved scope of PRA

NEI

Next Steps

- Industry concurs with direction of SRM
- Industry believes tabletops were effective
- We do not substantively differ with NRC's preliminary conclusions
- Reactor Oversight Process could be more challenging
- Industry will continue strong participation in process

NEI