TOPIC: 193001
KNOWLEDGE: K1.01 [2.5/2.7]
QID: P73

An atmospheric pressure of 15.0 psia is equivalent to...

A. 30.0 psig.

B. 29.4 psig.

C. 14.7 psig.

D. 0.0 psig.

ANSWER: D.

TOPIC: 193001
KNOWLEDGE: K1.01 [2.5/2.7]
QID: P273

A pressure gauge on a condenser reads 27.0 inches Hg vacuum. What is the absolute pressure corresponding to this vacuum? (Assume a standard atmospheric pressure of 15.0 psia.)

A. 14.0 psia

B. 13.5 psia

C. 1.5 psia

D. 1.0 psia

ANSWER: C.

TOPIC: 193001
KNOWLEDGE: K1.01 [2.5/2.7]
QID: P473

Assuming a standard atmospheric pressure of 15.0 psia, 5.0 inches Hg vacuum is equivalent to...

A. 2.5 psia.

B. 5.0 psia.

C. 10.0 psia.

D. 12.5 psia.

ANSWER: D.

TOPIC: 193001
KNOWLEDGE: K1.01 [2.5/2.7]
QID: P873

If a main steam line pressure gauge reads 900 psig, what is the absolute pressure?

A. 870 psia

B. 885 psia

C. 915 psia

D. 930 psia

ANSWER: C.

TOPIC: 193001
KNOWLEDGE: K1.01 [2.5/2.7]
QID: P1173

Which one of the following is equivalent to 5 psia?

A. 20 psig

B. 10 psig

C. 10 inches of mercury (Hg) vacuum

D. 20 inches of mercury (Hg) vacuum

ANSWER: D.

TOPIC: 193001
KNOWLEDGE: K1.01 [2.5/2.7]
QID: P1273

Which one of the following is arranged from the lowest pressure to the highest pressure?

A. 8 psia, 20 inches Hg absolute, 2 psig

B. 8 psia, 2 psig, 20 inches Hg absolute

C. 20 inches Hg absolute, 2 psig, 8 psia

D. 20 inches Hg absolute, 8 psia, 2 psig

ANSWER: A.

TOPIC: 193001
KNOWLEDGE: K1.01 [2.5/2.7]
QID: P1573

Which one of the following is arranged from the highest pressure to the lowest pressure?

A. 2 psig, 20 inches Hg absolute, 8 psia

B. 2 psig, 8 psia, 20 inches Hg absolute

C. 8 psia, 20 inches Hg absolute, 2 psig

D. 8 psia, 2 psig, 20 inches Hg absolute

ANSWER: A.

TOPIC: 193001
KNOWLEDGE: K1.01 [2.5/2.7]
QID: P1773

Which one of the following is approximately equivalent to 2 psig?

A. 11 psia

B. 13 psia

C. 15 psia

D. 17 psia

ANSWER: D.

TOPIC: 193001
KNOWLEDGE: K1.01 [2.5/2.7]
QID: P2073

Which one of the following is arranged from the lowest pressure to the highest pressure?

A. 2 psig, 12 inches Hg absolute, 8 psia

B. 2 psig, 18 inches Hg absolute, 8 psia

C. 12 psia, 20 inches Hg absolute, 2 psig

D. 12 psia, 30 inches Hg absolute, 2 psig

ANSWER: D.

TOPIC: 193001
KNOWLEDGE: K1.01 [2.5/2.7]
QID: P2173

Which one of the following is the approximate condenser vacuum when condenser pressure is 16 inches Hg absolute?

A. 4 inches Hg vacuum

B. 8 inches Hg vacuum

C. 12 inches Hg vacuum

D. 14 inches Hg vacuum

ANSWER: D.

TOPIC: 193001
KNOWLEDGE: K1.01 [2.5/2.7]
QID: P2273

Which one of the following is arranged from the highest pressure to the lowest pressure?

A. 2 psig, 12 inches Hg absolute, 8 psia

B. 2 psig, 18 inches Hg absolute, 8 psia

C. 12 psia, 20 inches Hg absolute, 2 psig

D. 12 psia, 30 inches Hg absolute, 2 psig

ANSWER: B.

TOPIC: 193001
KNOWLEDGE: K1.03 [2.6/2.6]
QID: P374 (B373)

Refer to the drawing of two water storage tanks with four differential pressure (D/P) level detectors (see figure below).

The tanks are identical and are being maintained at the same constant water level with 17 psia gas pressure above the water. The tanks are surrounded by standard atmospheric pressure. The temperature of the water in the tanks and reference legs is 70°F.

Which one of the level detectors is sensing the greatest D/P?

A. No. 1

B. No. 2

C. No. 3

D. No. 4

ANSWER: B.

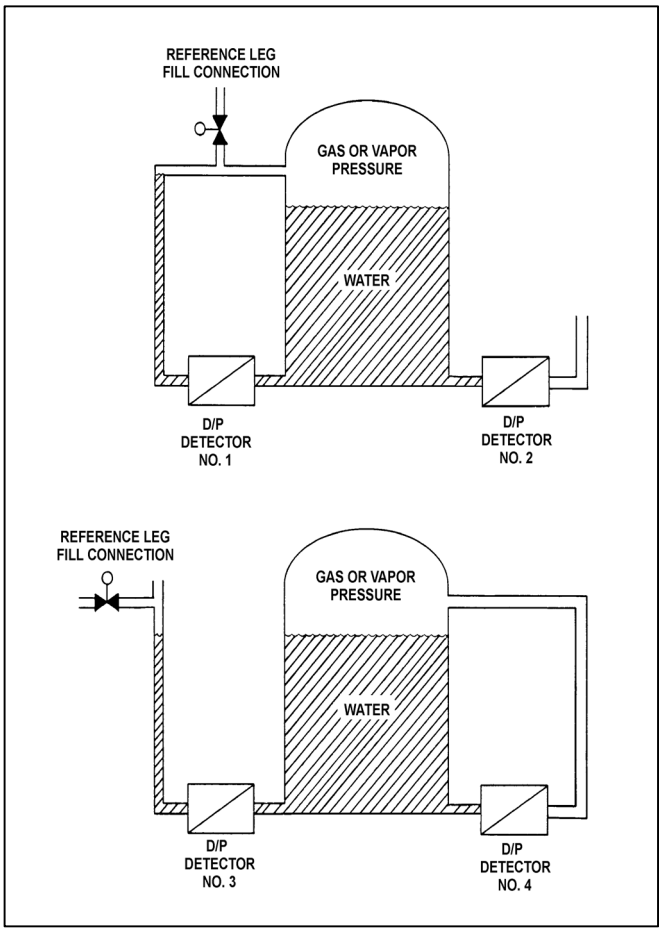

TOPIC: 193001
KNOWLEDGE: K1.03 [2.6/2.6]
QID: P573 (B1873)

An enclosed water storage tank is pressurized with nitrogen to prevent air inleakage. Tank pressure is allowed to vary as water level changes. A differential pressure detector is used to measure the tank level.

To achieve the most accurate level measurement, the low pressure side of the detector should sense which one of the following?

A. The pressure at the midline of the tank.

B. The pressure of the atmosphere surrounding the tank.

C. The pressure of a column of water external to the tank.

D. The pressure of the gas space at the top of the tank.

ANSWER: D.

TOPIC: 193001
KNOWLEDGE: K1.03 [2.6/2.6]
QID: P709 (B710)

Refer to the drawing of two water storage tanks with four differential pressure (D/P) level detectors (see figure below).

The tanks are identical and are being maintained at 17 psia and 70 percent water level (calibration conditions). They are located in a building that is currently at atmospheric pressure.

If the building ventilation system creates a vacuum in the building, which level detectors will provide the lowest level indications?

A. 1 and 3

B. 1 and 4

C. 2 and 3

D. 2 and 4

ANSWER: B.

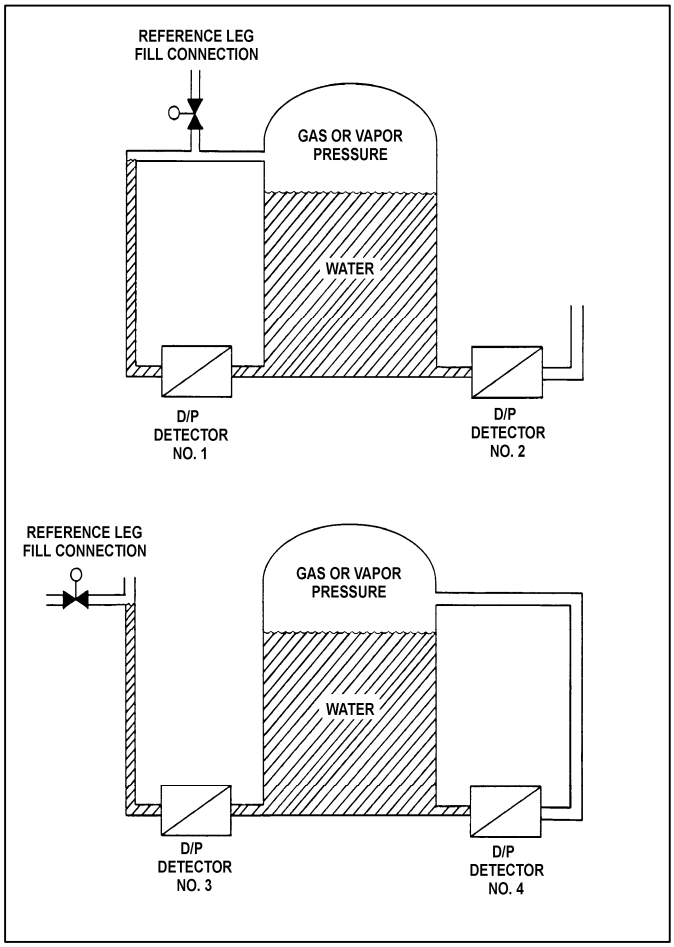

TOPIC: 193001
KNOWLEDGE: K1.03 [2.6/2.6]
QID: P1673 (B1174)

Refer to the drawing of two water storage tanks with four differential pressure (D/P) level detectors (see figure below).

The tanks are identical and are being maintained at 2 psig overpressure, the same constant water level, and a temperature of 60°F. They are surrounded by atmospheric pressure.

If a leak in the top of each tank causes a complete loss of overpressure, which detector(s) will produce a lower level indication?

A. No. 1 only

B. No. 2 only

C. No. 1 and 4

D. No. 2 and 3

ANSWER: D.

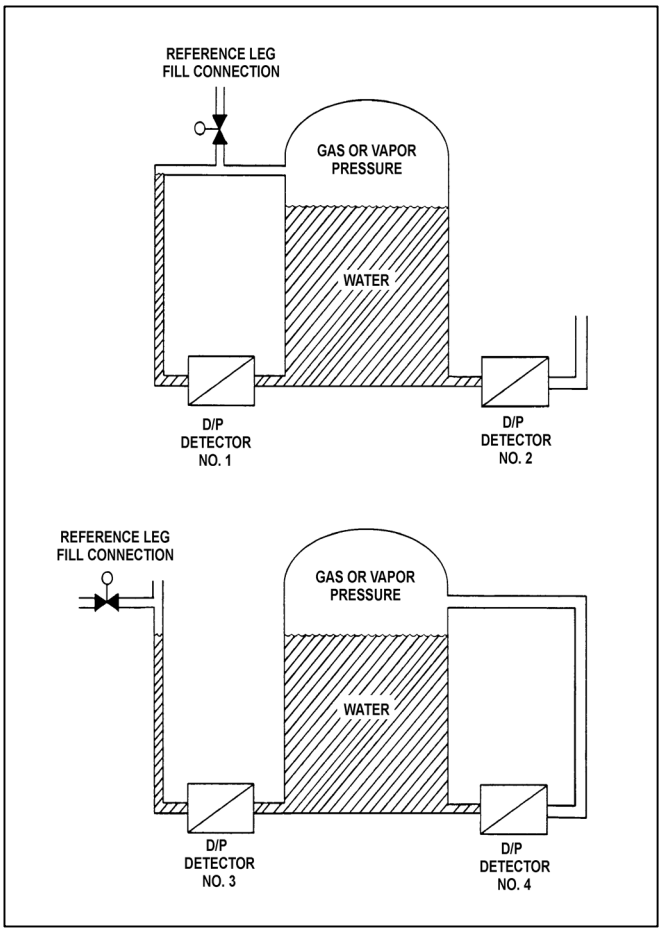

TOPIC: 193001
KNOWLEDGE: K1.03 [2.6/2.6]
QID: P2373 (B2373)

Refer to the drawing of two water storage tanks with four differential pressure (D/P) level detectors (see figure below).

The tanks are identical and are being maintained at 2 psig overpressure, 60°F, and the same constant water level. The tanks are located within a sealed containment structure that is being maintained at standard atmospheric pressure. All level detectors have been calibrated and are producing the same level indication.

If a ventilation malfunction causes the containment structure pressure to decrease to 13 psia, which detectors will produce the lowest level indications?

A. 1 and 3

B. 2 and 4

C. 1 and 4

D. 2 and 3

ANSWER: C.

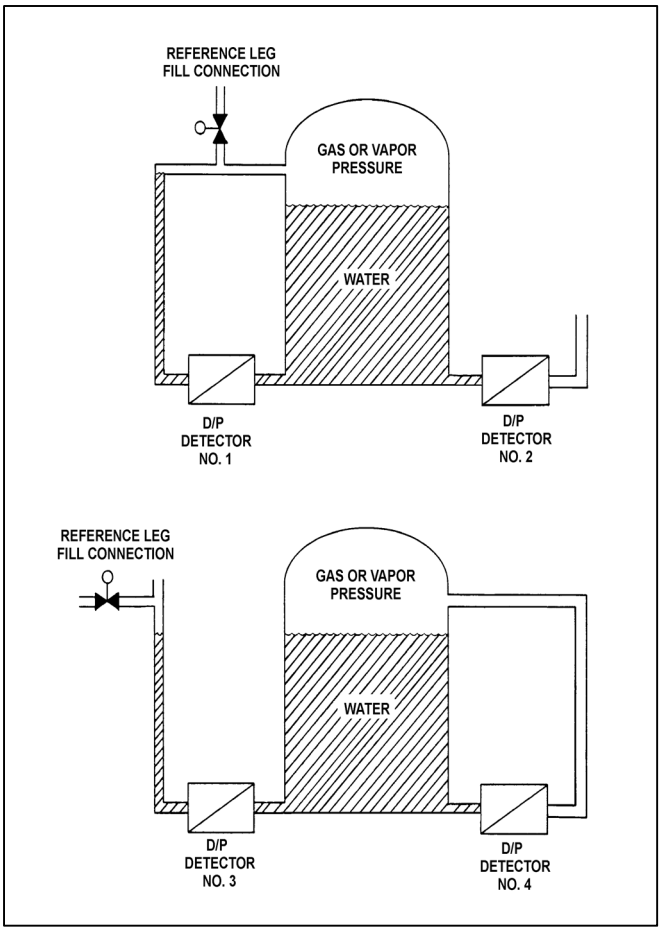

TOPIC: 193001
KNOWLEDGE: K1.03 [2.6/2.6]
QID: P2574 (B2573)

Refer to the drawing of two water storage tanks with four differential pressure (D/P) level detectors (see figure below).

The tanks are identical and are being maintained at 2 psig overpressure, 60°F, and the same constant water level. The tanks are located within a sealed containment structure that is being maintained at standard atmospheric pressure. All level detectors have been calibrated and are producing the same level indication.

If a ventilation malfunction causes the containment structure pressure to decrease to 13 psia, which detectors will produce the highest level indications?

A. 1 and 2

B. 3 and 4

C. 1 and 4

D. 2 and 3

ANSWER: D.

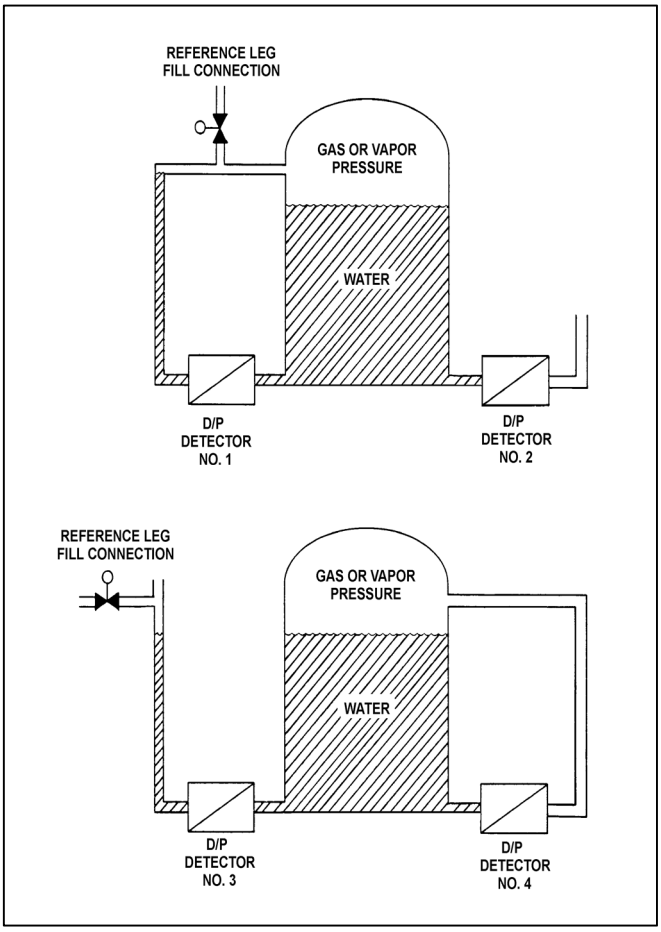

TOPIC: 193001
KNOWLEDGE: K1.03 [2.6/2.6]
QID: P2673 (B73)

Refer to the drawing of a water-filled manometer (see figure below).

The manometer is installed across an orifice in a ventilation duct to determine the direction of airflow. With the manometer conditions as shown, the pressure at P1 is _____ than P2; and the direction of airflow is _____.

A. greater; left to right

B. greater; right to left

C. less; left to right

D. less; right to left

ANSWER: A.

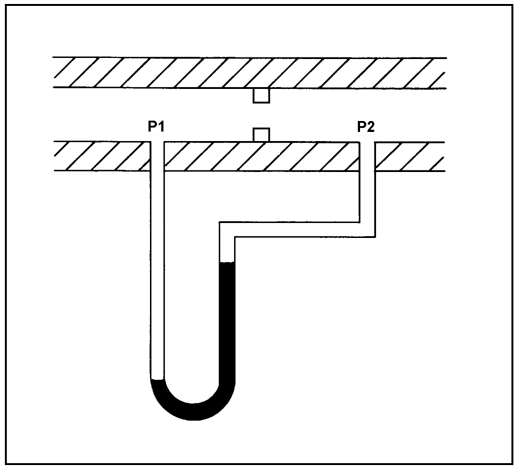

TOPIC: 193001
KNOWLEDGE: K1.03 [2.6/2.6]
QID: P2873 (B1073)

Refer to the drawing of two water storage tanks with four differential pressure (D/P) level detectors (see figure below).

The tanks are identical with equal water levels and 20 psia gas pressure above the water. The tanks are surrounded by standard atmospheric pressure. The temperature of the water in the tanks and reference legs is 70°F.

If each detector experiences a ruptured diaphragm, which detector(s) will produce a lower level indication? (Assume that actual tank and reference leg water levels do not change.)

A. No. 1 only

B. No. 2 only

C. No. 1, 2, and 3

D. No. 2, 3, and 4

ANSWER: D.

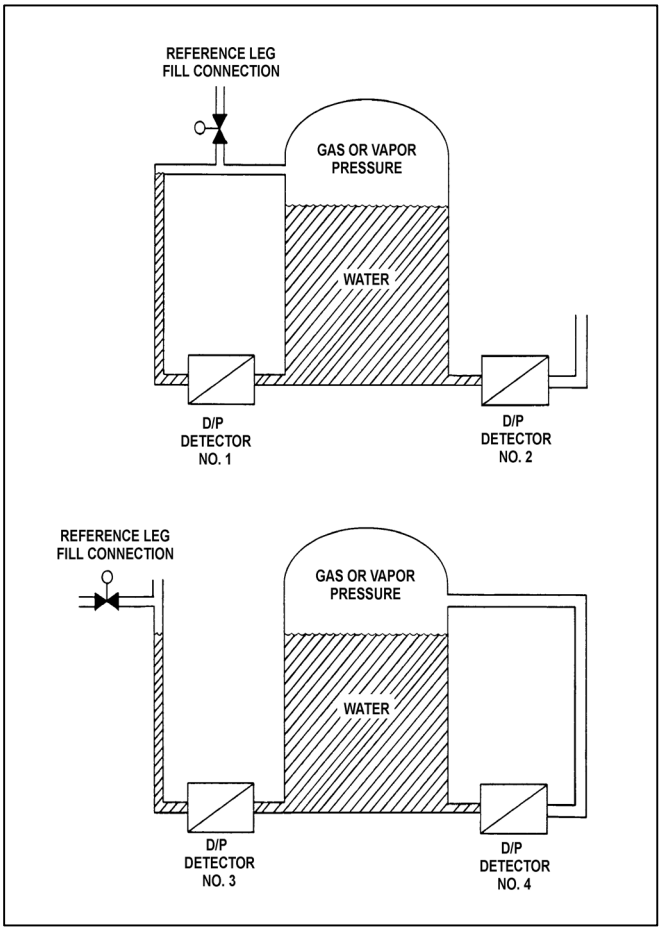

TOPIC: 193001
KNOWLEDGE: K1.03 [2.6/2.6]
QID: P2973 (B673)

Refer to the drawing of a water-filled manometer (see figure below).

The manometer is installed across an orifice in a ventilation duct to determine the direction of airflow. With the manometer conditions as shown, the pressure at P1 is _____ than P2; and the direction of airflow is _____.

A. less; right to left

B. less; left to right

C. greater; right to left

D. greater; left to right

ANSWER: A.

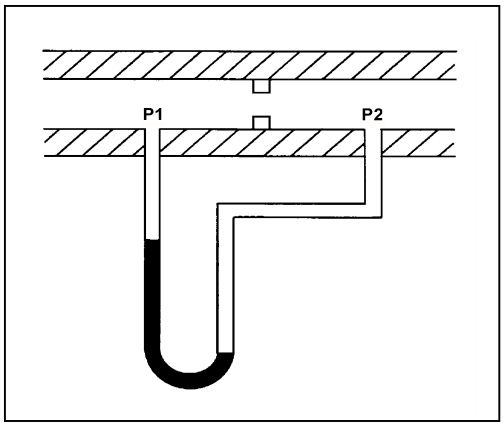

TOPIC: 193001
KNOWLEDGE: K1.03 [2.6/2.6]
QID: P3173 (B3173)

A water storage tank is vented to atmosphere. The tank is located at sea level and contains 100,000 gallons of 80°F water. A pressure gauge at the bottom of the tank reads 5.6 psig. What is the approximate water level in the tank?

A. 13 feet

B. 17 feet

C. 21 feet

D. 25 feet

ANSWER: A.

TOPIC: 193001
KNOWLEDGE: K1.03 [2.6/2.6]
QID: P3673 (B3673)

Refer to the drawing of a tank with a differential pressure (D/P) level detector (see figure below).

If the tank contains 30 feet of water at 60°F, what is the approximate D/P sensed by the detector?

A. 7 psid

B. 13 psid

C. 20 psid

D. 28 psid

ANSWER: B.

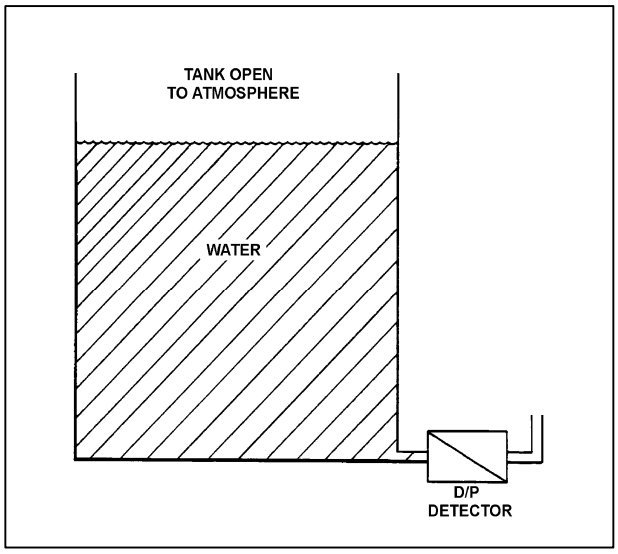

TOPIC: 193001
KNOWLEDGE: K1.03 [2.6/2.6]
QID: P3873 (B3873)

A water storage tank is vented to atmosphere. The tank is located at sea level and contains 100,000 gallons of water at 80°F. A pressure gauge at the bottom of the tank reads 7.3 psig. What is the approximate water level in the tank?

A. 13 feet

B. 17 feet

C. 21 feet

D. 25 feet

ANSWER: B.

TOPIC: 193001
KNOWLEDGE: K1.03 [2.6/2.6]
QID: P4537 (B4537)

A water storage tank is vented to atmosphere. The tank is located at sea level and contains 100,000 gallons of water at 80°F. A pressure gauge at the bottom of the tank reads 9.0 psig. What is the approximate water level in the tank?

A. 13 feet

B. 17 feet

C. 21 feet

D. 25 feet

ANSWER: C.

TOPIC: 193001
KNOWLEDGE: K1.03 [2.6/2.6]
QID: P4837 (B4837)

Refer to the drawing of two water storage tanks with four differential pressure (D/P) level detectors (see figure below).

The tanks are identical and are being maintained at 2 psig overpressure, the same constant water level, and a temperature of 60°F. The tanks are surrounded by atmospheric pressure. All level detectors have been calibrated and are producing the same level indication.

If a leak in the top of each tank causes a complete loss of overpressure in both tanks, which detector(s) will produce the highest level indication(s)?

A. No. 1 only

B. No. 2 only

C. No. 1 and 4

D. No. 2 and 3

ANSWER: C.

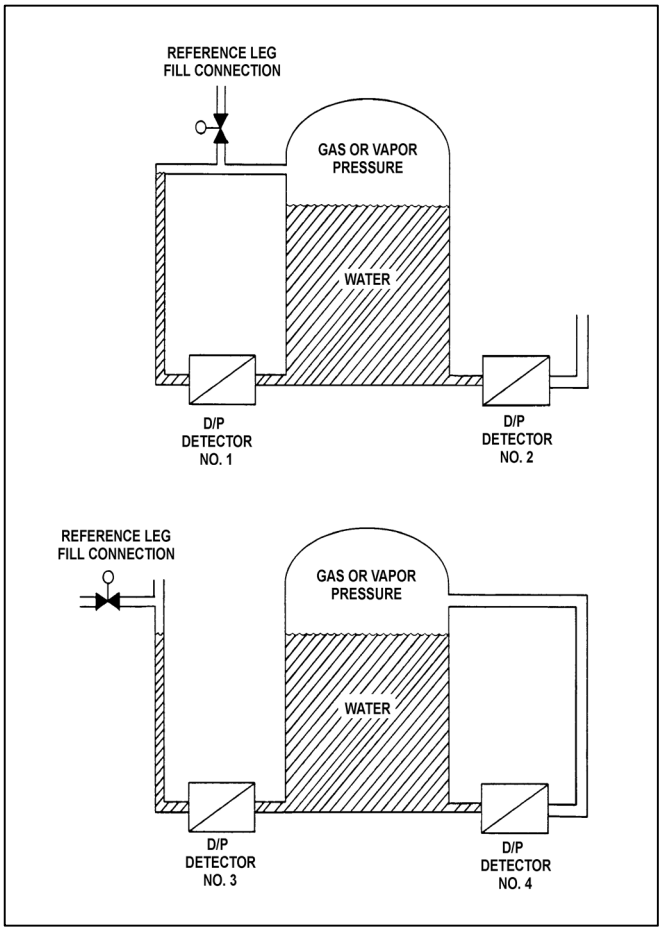

TOPIC: 193001
KNOWLEDGE: K1.03 [2.6/2.6]
QID: P5837 (B5837)

Refer to the drawing of an open water storage tank with a differential pressure (D/P) level indicator that is vented to atmosphere (see figure below). Both the tank and the level indicator are surrounded by standard atmospheric pressure. Tank water temperature is 70°F.

The D/P level indicator is sensing a differential pressure of 4.0 psi. What is the water level in the tank above the instrument penetration?

A. 9.2 feet

B. 16.7 feet

C. 24.7 feet

D. 43.2 feet

ANSWER: A.

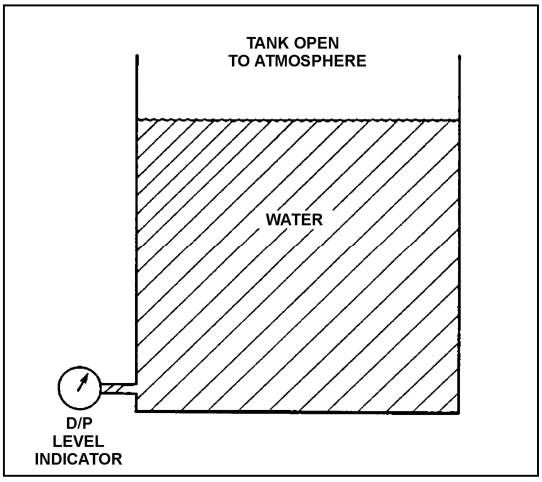

There are no test items available for topic 193002.

TOPIC: 193003
KNOWLEDGE: K1.02 [2.4/2.5]
QID: P1774

Two identical pressurizers are connected to the same location on two identical reactor coolant systems operating at 1,000 psia. Pressurizer A volume contains 50 percent saturated water and 50 percent saturated steam. Pressurizer B volume contains 50 percent subcooled water (at 300°F) and 50 percent nitrogen.

Which pressurizer will maintain the higher pressure following a sudden 10 percent liquid outsurge from each pressurizer, and why?

A. Pressurizer A due to vaporizing of saturated water as pressure begins to decrease.

B. Pressurizer A due to the expansion characteristics of saturated steam being better than the expansion characteristics of nitrogen.

C. Pressurizer B due to the subcooled water removing a relatively small amount of energy during the outsurge.

D. Pressurizer B due to the expansion characteristics of nitrogen being better than the expansion characteristics of saturated steam.

ANSWER: A.

TOPIC: 193003
KNOWLEDGE: K1.02 [2.4/2.5]
QID: P1973

Two identical pressurizers are connected to the same location on two identical reactor coolant systems operating at 1,000 psia. Pressurizer A volume contains 50 percent subcooled water (at 300°F) and 50 percent nitrogen. Pressurizer B volume contains 50 percent saturated water and 50 percent saturated steam.

Which pressurizer will maintain the higher pressure during a sudden 10 percent liquid outsurge from each pressurizer, and why?

A. Pressurizer A due to the subcooled water removing a relatively small amount of energy during the outsurge.

B. Pressurizer A due to the expansion characteristics of nitrogen being better than the expansion characteristics of saturated steam.

C. Pressurizer B due to vaporizing of saturated water as pressure begins to decrease.

D. Pressurizer B due to the expansion characteristics of saturated steam being better than the expansion characteristics of nitrogen.

ANSWER: C.

TOPIC: 193003
KNOWLEDGE: K1.02 [2.4/2.5]
QID: P3874

A reactor is operating normally at 100 percent power. Reactor coolant enters the reactor vessel at a temperature of 556°F and a total flow rate of 320,000 gpm. The reactor coolant leaves the reactor vessel at 612°F.

What is the approximate flow rate of the reactor coolant leaving the reactor vessel?

A. 320,000 gpm

B. 330,000 to 339,000 gpm

C. 340,000 to 349,000 gpm

D. 350,000 to 359,000 gpm

ANSWER: D.

TOPIC: 193003
KNOWLEDGE: K1.08 [2.8/2.8]
QID: P674 (B1074)

A liquid is saturated with 0 percent quality. Assuming pressure remains constant, the addition of a small amount of heat will...

A. raise the steady-state liquid temperature above the boiling point.

B. result in a subcooled liquid.

C. result in some of the liquid vaporizing.

D. result in a superheated liquid.

ANSWER: C.

TOPIC: 193003
KNOWLEDGE: K1.08 [2.8/2.8]
QID: P774

A pressurizer is operating in a saturated condition at 636°F. If a sudden 10 percent liquid outsurge occurs, pressurizer pressure will _____; and pressurizer temperature will _____.

A. remain the same; decrease

B. remain the same; remain the same

C. decrease; decrease

D. decrease; remain the same

ANSWER: C.

TOPIC: 193003
KNOWLEDGE: K1.08 [2.8/2.8]
QID: P874 (B875)

Consider a steam-water mixture with a quality of 99 percent. If pressure remains constant and heat is removed from the mixture, the temperature of the mixture will _____; and the quality of the mixture will _____. (Assume the mixture remains saturated.)

A. decrease; increase

B. decrease; decrease

C. remain the same; increase

D. remain the same; decrease

ANSWER: D.

TOPIC: 193003
KNOWLEDGE: K1.08 [2.8/2.8]
QID: P1075

A nuclear power plant is shut down with the pressurizer in a saturated condition as follows:

Pressurizer liquid temperature = 588°F
Pressurizer vapor temperature = 588°F
Pressurizer pressure = 1,410 psia

If the pressurizer is vented until pressure equals 1,200 psia, pressurizer liquid temperature will...

A. increase due to condensation of vapor.

B. increase due to evaporation of liquid.

C. decrease due to condensation of vapor.

D. decrease due to evaporation of liquid.

ANSWER: D.

TOPIC: 193003
KNOWLEDGE: K1.08 [2.8/2.8]
QID: P1174

Which one of the following describes the temperature of a saturated liquid?

A. Below the boiling point.

B. At the boiling point.

C. Above the boiling point.

D. Unrelated to the boiling point.

ANSWER: B.

TOPIC: 193003
KNOWLEDGE: K1.08 [2.8/2.8]
QID: P1374 (B1874)

A steam-water mixture is initially saturated with a quality of 95 percent when a small amount of heat is added to the mixture. If the mixture remains saturated and pressure remains constant, the temperature of the mixture will _____; and the quality of the mixture will _____.

A. increase; remain the same

B. increase; increase

C. remain the same; remain the same

D. remain the same; increase

ANSWER: D.

TOPIC: 193003
KNOWLEDGE: K1.08 [2.8/2.8]
QID: P1474 (B1974)

An open container holds 1.0 lbm of saturated water at standard atmospheric pressure. The addition of 1.0 Btu will…

A. raise the temperature of the water by 1°F.

B. vaporize a portion of the water.

C. increase the density of the water.

D. result in 1°F of superheat.

ANSWER: B.

TOPIC: 193003
KNOWLEDGE: K1.08 [2.8/2.8]
QID: P1574 (B1574)

Consider a steam-water mixture with a quality of 79 percent. If pressure remains constant and heat is added to the mixture, the temperature of the mixture will _____; and the quality of the mixture will _____. (Assume the mixture remains saturated.)

A. increase; increase

B. increase; remain the same

C. remain the same; increase

D. remain the same; remain the same

ANSWER: C.

TOPIC: 193003
KNOWLEDGE: K1.08 [2.8/2.8]
QID: P1575

A nuclear power plant is shut down with the pressurizer in a saturated condition as follows:

Pressurizer liquid temperature = 588°F
Pressurizer vapor temperature = 588°F
Pressurizer pressure = 1,410 psia

Pressurizer spray is initiated to lower pressurizer pressure to 1,350 psia. When pressurizer pressure stabilizes at 1,350 psia, liquid temperature will be _____; and vapor temperature will be _____.

A. the same; the same

B. the same; lower

C. lower; the same

D. lower; lower

ANSWER: D.

TOPIC: 193003
KNOWLEDGE: K1.08 [2.8/2.8]
QID: P1974 (B3574)

A steam-water mixture is initially saturated with a quality of 50 percent when a small amount of heat is added. If pressure remains constant and the mixture remains saturated, mixture steam quality will _____; and mixture temperature will _____.

A. increase; increase

B. increase; remain the same

C. remain the same; increase

D. remain the same; remain the same

ANSWER: B.

TOPIC: 193003
KNOWLEDGE: K1.08 [2.8/2.8]
QID: P1976 (B2874)

Which one of the following is the approximate quality of a steam-water mixture at 467°F with an enthalpy of 1,000 Btu/lbm?

A. 24 percent

B. 27 percent

C. 73 percent

D. 76 percent

ANSWER: C.

TOPIC: 193003
KNOWLEDGE: K1.08 [2.8/2.8]
QID: P2174

Consider a pressurizer containing a saturated steam-water mixture at 636°F with a quality of 15 percent. If an outsurge removes 10 percent of the liquid volume from the pressurizer, the temperature of the remaining mixture will _____, and the quality of the remaining mixture will _____. (Assume the mixture remains saturated.)

A. decrease; decrease

B. decrease; increase

C. remain the same; decrease

D. remain the same; increase

ANSWER: B.

TOPIC: 193003
KNOWLEDGE: K1.08 [2.8/2.8]
QID: P2374 (B2375)

Which one of the following describes the effect of removing heat from a saturated steam-water mixture that remains in a saturated condition?

A. Temperature will increase.

B. Temperature will decrease.

C. Quality will increase.

D. Quality will decrease.

ANSWER: D.

TOPIC: 193003
KNOWLEDGE: K1.08 [2.8/2.8]
QID: P2474

A nuclear power plant is shut down with the pressurizer in a saturated condition as follows:

Pressurizer liquid temperature = 588°F
Pressurizer vapor temperature = 588°F
Pressurizer pressure = 1,410 psia

Pressurizer heaters are energized to raise pressurizer pressure to 1,450 psia. When pressurizer pressure stabilizes at 1,450 psia, liquid temperature will be _____ and vapor temperature will be _____.

A. the same; the same

B. the same; higher

C. higher; the same

D. higher; higher

ANSWER: D.

TOPIC: 193003
KNOWLEDGE: K1.08 [2.8/2.8]
QID: P2874 (B3374)

An open container holds 1.0 lbm of saturated water at standard atmospheric pressure. The addition of 4.0 Btu will...

A. result in 4°F of superheat.

B. vaporize a portion of the water.

C. increase the density of the water.

D. raise the temperature of the water by 4°F.

ANSWER: B.

TOPIC: 193003
KNOWLEDGE: K1.08 [2.8/2.8]
QID: P2974 (B2975)

Consider a sealed vessel containing 1,000 lbm of a saturated steam-water mixture at 500°F. The vessel is perfectly insulated with no heat gain or loss occurring.

If a leak near the bottom of the vessel results in a loss of 10 percent of the liquid volume from the vessel, the temperature of the mixture will _____; and the overall quality of the mixture will _____. (Assume the mixture remains saturated.)

A. decrease; increase

B. decrease; decrease

C. remain the same; increase

D. remain the same; decrease

ANSWER: A.

TOPIC: 193003
KNOWLEDGE: K1.12 [2.8/2.3]
QID: P3375 (B3378)

Given the following:

- A saturated steam-water mixture with an inlet quality of 60 percent is flowing through a moisture separator.
- The moisture separator is 100 percent efficient for removing moisture.

How much moisture will be removed by the moisture separator from 50 lbm of the steam-water mixture?

A. 10 lbm

B. 20 lbm

C. 30 lbm

D. 40 lbm

ANSWER: B.

TOPIC: 193003
KNOWLEDGE: K1.12 [2.8/2.3]
QID: P3774 (B3778)

Given the following:

- A saturated steam-water mixture with an inlet quality of 40 percent is flowing through a moisture separator.
- The moisture separator is 100 percent efficient for removing water.

How much water will be removed by the moisture separator from 50 lbm of the steam-water mixture?

A. 10 lbm

B. 20 lbm

C. 30 lbm

D. 40 lbm

ANSWER: C.

TOPIC: 193003
KNOWLEDGE: K1.14 [2.4/2.5]
QID: P574

Any vapor having a temperature above saturation temperature is a...

A. saturated vapor.

B. superheated vapor.

C. dry saturated vapor.

D. wet saturated vapor.

ANSWER: B.

TOPIC: 193003
KNOWLEDGE: K1.14 [2.4/2.5]
QID: P1674

A reactor trip occurred 10 minutes ago due to a loss of coolant accident. Emergency coolant injection is in progress and pressurizer level is increasing. Current pressurizer conditions are as follows:

Pressurizer liquid temperature	=	568°F
Pressurizer vapor temperature	=	596°F
Pressurizer pressure	=	1,410 psia
Pressurizer level	=	60 percent

Given these conditions, the pressurizer liquid is _____; and the pressurizer vapor is _____.

A. saturated; saturated

B. saturated; superheated

C. subcooled; saturated

D. subcooled; superheated

ANSWER: D.

TOPIC: 193003
KNOWLEDGE: K1.14 [2.4/2.5]
QID: P2074 (B2074)

Consider a saturated steam-water mixture at 500°F with a quality of 90 percent. If the pressure of the mixture is decreased with no heat gain or loss, the temperature of the mixture will _____; and the quality of the mixture will _____. (Assume the mixture remains saturated.)

A. decrease; decrease

B. decrease; increase

C. remain the same; decrease

D. remain the same; increase

ANSWER: B.

TOPIC: 193003
KNOWLEDGE: K1.14 [2.4/2.5]
QID: P7709 (B7709)

Consider 1.0 lbm of dry saturated steam at 200 psia. If pressure does <u>not</u> change, which one of the following will be caused by the addition of 6.0 Btu to the steam?

A. The steam will remain saturated at the same temperature.

B. The steam will become superheated at the same temperature.

C. The steam will remain saturated at a higher temperature.

D. The steam will become superheated at a higher temperature.

ANSWER: D.

TOPIC: 193003
KNOWLEDGE: K1.16 [2.6/2.7]
QID: P2975 (B2973)

An open vessel contains 1.0 lbm of water at 206°F and standard atmospheric pressure. Which one of the following will be caused by the addition of 3.0 Btu to the water?

A. The water temperature will rise by approximately 3°F.

B. Approximately 3 percent of the water mass will vaporize.

C. The water density will decrease by approximately 3 percent.

D. The water will become superheated by approximately 3°F.

ANSWER: A.

TOPIC: 193003
KNOWLEDGE: K1.17 [3.0/3.2]
QID: P575

A reactor is shut down with reactor coolant system (RCS) pressure at 1,500 psia and core decay heat is being removed via the steam generators (SGs). What pressure must be maintained in the SGs to obtain a 110°F subcooling margin in the reactor coolant leaving the SGs? (Assume the reactor coolant leaves the SGs at the SG saturation temperature.)

A. 580 psia

B. 600 psia

C. 620 psia

D. 640 psia

ANSWER: B.

TOPIC: 193003
KNOWLEDGE: K1.17 [3.0/3.2]
QID: P675

A reactor is shut down with reactor coolant system (RCS) pressure at 1,000 psia and core decay heat is being removed via the steam generators (SGs). What pressure must be maintained in the SGs to obtain a 50°F subcooling margin in the reactor coolant leaving the SGs? (Assume the reactor coolant leaves the SGs at the SG saturation temperature.)

A. 550 psia

B. 600 psia

C. 650 psia

D. 700 psia

ANSWER: C.

TOPIC: 193003
KNOWLEDGE: K1.17 [3.0/3.2]
QID: P775

Which one of the following will increase the subcooling of the condensate in the main condenser hotwell?

A. Isolate circulating water to one shell of the main condenser.

B. Increase circulating water inlet temperature.

C. Decrease circulating water flow rate.

D. Decrease main turbine steam flow rate.

ANSWER: D.

TOPIC: 193003
KNOWLEDGE: K1.24 [2.8/3.1]
QID: P1675 (B1175)

Which one of the following is the approximate temperature of a saturated steam-water mixture that has an enthalpy of 1,150 Btu/lbm and a quality of 95 percent?

A. 220°F

B. 270°F

C. 360°F

D. 440°F

ANSWER: C.

TOPIC: 193003
KNOWLEDGE: K1.24 [2.8/3.1]
QID: P6039 (B6038)

Given a set of steam tables that lists the following parameters for saturated steam and water:

- Pressure
- Enthalpy
- Specific volume
- Entropy
- Temperature

One can determine the _____ of a saturated steam-water mixture given only the _____.

A. temperature; enthalpy

B. temperature; pressure

C. pressure; entropy

D. pressure; specific volume

ANSWER: B.

TOPIC: 193003
KNOWLEDGE: K1.24 [2.8/3.1]
QID: P6939 (B6938)

A nuclear power plant experienced a loss of all AC electrical power due to a natural disaster. A few days later, there is turbulent boiling in the spent fuel pool. Average spent fuel temperature is elevated but stable. Assume that boiling is the only means of heat removal from the spent fuel pool.

Given the following stable current conditions:

Spent fuel decay heat rate = 4.8 MW
Spent fuel building pressure = 14.7 psia
Spent fuel pool temperature = 212°F

At what approximate rate is the mass of water in the spent fuel pool decreasing?

A. 4,170 lbm/hr

B. 4,950 lbm/hr

C. 14,230 lbm/hr

D. 16,870 lbm/hr

ANSWER: D.

TOPIC: 193003
KNOWLEDGE: K1.24 [2.8/3.1]
QID: P7039 (B7038)

Given the following initial conditions for a spent fuel pool:

Spent fuel decay heat rate	=	5.0 MW
Spent fuel pool water temperature	=	90°F
Spent fuel pool water mass	=	2.5×10^6 lbm
Spent fuel pool water specific heat	=	1.0 Btu/lbm-°F

If a complete loss of spent fuel pool cooling occurs, how long will it take for spent fuel pool water temperature to reach 212°F? (Assume that the spent fuel pool remains in thermal equilibrium, and that there is no heat removal from the spent fuel pool.)

A. 18 hours

B. 31 hours

C. 48 hours

D. 61 hours

ANSWER: A.

TOPIC: 193003
KNOWLEDGE: K1.25 [3.3/3.4]
QID: P75

Which one of the following is the approximate reactor coolant system subcooling margin when reactor coolant temperature is 280°F and pressurizer pressure is 400 psig?

A. 165°F

B. 168°F

C. 265°F

D. 268°F

ANSWER: B.

TOPIC: 193003
KNOWLEDGE: K1.25 [3.3/3.4]
QID: P141

Given the following reactor coolant system (RCS) parameters, what is the RCS subcooling margin.

RCS pressure = 2,235 psig
RCS hot leg temperature = 610°F

A. 25°F

B. 31°F

C. 38°F

D. 43°F

ANSWER: D.

TOPIC: 193003
KNOWLEDGE: K1.25 [3.3/3.4]
QID: P275 (B275)

The saturation pressure for water at 328°F is approximately...

A. 85 psig.

B. 100 psig.

C. 115 psig.

D. 130 psig.

ANSWER: A.

TOPIC: 193003
KNOWLEDGE: K1.25 [3.3/3.4]
QID: P376

What is the approximate enthalpy of a saturated steam-water mixture at 130°F with a quality of 90 percent?

A. 1,015 Btu/lbm

B. 1,093 Btu/lbm

C. 1,118 Btu/lbm

D. 1,216 Btu/lbm

ANSWER: A.

TOPIC: 193003
KNOWLEDGE: K1.25 [3.3/3.4]
QID: P385

The following steady-state 100 percent power conditions existed just prior to a plant shutdown for maintenance:

RCS T_{ave} = 573.5°F
SG T_{stm} = 513.5°F

During the shutdown, 5 percent of the total steam generator (SG) tubes were plugged. Upon completion of the maintenance, the plant was returned to 100 percent power with RCS mass flow rate and RCS temperatures unchanged.

Which one of the following is the approximate current SG steam pressure with the plant at 100 percent power?

A. 711 psia

B. 734 psia

C. 747 psia

D. 762 psia

ANSWER: C.

TOPIC: 193003
KNOWLEDGE: K1.25 [3.3/3.4]
QID: P474

Main condenser hotwell condensate is 4°F subcooled at a temperature of 112°F. What is the main condenser pressure?

A. 1.78 psia

B. 1.51 psia

C. 1.35 psia

D. 1.20 psia

ANSWER: B.

TOPIC: 193003
KNOWLEDGE: K1.25 [3.3/3.4]
QID: P1275

For steam at 230 psia and 900°F, what is the approximate amount of superheat?

A. 368°F

B. 393°F

C. 506°F

D. 535°F

ANSWER: C.

TOPIC: 193003
KNOWLEDGE: K1.25 [3.3/3.4]
QID: P1775 (B1776)

What is the approximate amount of heat required to convert 3.0 lbm of water at 100°F and 100 psia to dry saturated steam at 100 psia?

A. 889 Btu

B. 1,119 Btu

C. 2,666 Btu

D. 3,358 Btu

ANSWER: D.

TOPIC: 193003
KNOWLEDGE: K1.25 [3.3/3.4]
QID: P1875

Dry saturated steam undergoes an ideal expansion process in an ideal turbine from 1,000 psia to 28 inches Hg vacuum. Approximately how much specific work is being performed by the turbine?

A. 1,193 Btu/lbm

B. 805 Btu/lbm

C. 418 Btu/lbm

D. 388 Btu/lbm

ANSWER: C.

TOPIC: 193003
KNOWLEDGE: K1.25 [3.3/3.4]
QID: P2275 (B2275)

A saturated steam-water mixture with a quality of 30 percent leaves a main turbine at 1.0 x 10^6 lbm/hr and enters a steam condenser at 2.0 psia. Condensate enters the hotwell at 118°F.

Which one of the following is the approximate condenser heat transfer rate?

A. 3.1 x 10^8 Btu/hr

B. 5.8 x 10^8 Btu/hr

C. 7.2 x 10^8 Btu/hr

D. 9.9 x 10^8 Btu/hr

ANSWER: A.

TOPIC: 193003
KNOWLEDGE: K1.25 [3.3/3.4]
QID: P2375 (B2374)

Which one of the following is the approximate amount of heat required to convert 2.0 lbm of water at 100°F and 100 psia to dry saturated steam at 100 psia?

A. 1,119 Btu

B. 1,187 Btu

C. 2,238 Btu

D. 2,374 Btu

ANSWER: C.

TOPIC: 193003
KNOWLEDGE: K1.25 [3.3/3.4]
QID: P2475 (B2475)

A steam line is carrying steam at 500 psia and 507°F. Approximately how much specific ambient heat loss is required before moisture formation can occur in the steam line?

A. 31 Btu/lbm

B. 45 Btu/lbm

C. 58 Btu/lbm

D. 71 Btu/lbm

ANSWER: A

TOPIC: 193003
KNOWLEDGE: K1.25 [3.3/3.4]
QID: P2575 (B2575)

Which one of the following is the approximate amount of heat required to convert 2.0 lbm of water at 100°F and 100 psia to superheated steam at 400°F and 100 psia?

A. 1,119 Btu

B. 1,159 Btu

C. 2,239 Btu

D. 2,319 Btu

ANSWER: D.

TOPIC: 193003
KNOWLEDGE: K1.25 [3.3/3.4]
QID: P2675 (B2675)

What is the approximate specific heat (Btu/lbm-°F) of water at 300°F and 100 psia?

A. 1.03 Btu/lbm-°F

B. 1.11 Btu/lbm-°F

C. 1.17 Btu/lbm-°F

D. 1.25 Btu/lbm-°F

ANSWER: A.

TOPIC: 193003
KNOWLEDGE: K1.25 [3.3/3.4]
QID: P2775 (B2776)

With a nuclear power plant operating near rated power, air inleakage into the main condenser causes main condenser pressure to increase from 1.0 psia to 2.0 psia.

Given the following:

- Initial main condenser condensate depression was 4°F.
- After the plant stabilizes, main condenser condensate depression is 2°F with main condenser pressure at 2.0 psia.

Which one of the following is the approximate increase in main condenser specific heat rejection needed to restore condensate depression to 4°F?

A. 2 Btu/lbm

B. 4 Btu/lbm

C. 8 Btu/lbm

D. 16 Btu/lbm

ANSWER: A.

TOPIC: 193003
KNOWLEDGE: K1.25 [3.3/3.4]
QID: P2875

Given the following:

- A nuclear power plant is operating near rated power.
- The main turbine is comprised of a single unit with no reheat.
- Main turbine inlet steam conditions are 900 psia and 100 percent quality.
- Ideal steam expansion is occurring in the main turbine.
- Main condenser pressure is 1.0 psia.

Which one of the following is the approximate main condenser specific heat rejection needed to establish condensate depression at 4°F?

A. 716 Btu/lbm

B. 782 Btu/lbm

C. 856 Btu/lbm

D. 1,132 Btu/lbm

ANSWER: A.

TOPIC: 193003
KNOWLEDGE: K1.25 [3.3/3.4]
QID: P3074 (B3075)

The temperature of a saturated steam-water mixture is 467°F.

Which one of the following parameter values, when paired with the temperature, provides insufficient information to determine the quality of the mixture?

A. Pressure is 499.96 psia

B. Enthalpy is 977.33 Btu/lbm

C. Entropy is 1.17 Btu/lbm -°R

D. Specific volume is 0.817 ft^3/lbm

ANSWER: A.

TOPIC: 193003
KNOWLEDGE: K1.25 [3.3/3.4]
QID: P3175 (B3175)

A steam line is carrying dry saturated steam at 500 psia. Approximately how much heat addition to the steam is necessary to achieve 60°F of superheat?

A. 31 Btu/lbm

B. 45 Btu/lbm

C. 58 Btu/lbm

D. 71 Btu/lbm

ANSWER: B.

TOPIC: 193003
KNOWLEDGE: K1.25 [3.3/3.4]
QID: P3275 (B3274)

An ideal main turbine generator (MTG) is producing 1,000 MW of electrical power while being supplied with 100 percent quality steam at 920 psig. Steam supply pressure is then gradually increased to 980 psig at the same quality. Assume turbine control valve position and condenser vacuum remain the same.

Which one of the following describes why the MTG output increases as steam pressure increases?

A. Each lbm of steam entering the turbine has a higher specific heat.

B. Each lbm of steam entering the turbine has a higher specific enthalpy.

C. Each lbm of steam passing through the turbine expands to fill a greater volume.

D. Each lbm of steam passing through the turbine performs increased work in the turbine.

ANSWER: D.

TOPIC: 193003
KNOWLEDGE: K1.25 [3.3/3.4]
QID: P3475 (B3475)

Which one of the following is the approximate amount of heat required to convert 2.0 lbm of water at 100°F and 100 psia to dry saturated steam at 100 psia?

A. 560 Btu

B. 1,120 Btu

C. 2,238 Btu

D. 3,356 Btu

ANSWER: C.

TOPIC: 193003
KNOWLEDGE: K1.25 [3.3/3.4]
QID: P3575

The following steady-state 100 percent power conditions existed just prior to a plant shutdown for maintenance:

RCS T_{ave} = 572°F
SG T_{stm} = 534°F

During the shutdown, 5 percent of the total steam generator (SG) tubes were plugged. Which one of the following will be the approximate SG steam pressure when the plant is returned to 100 percent power? (Assume RCS mass flow rate and RCS T_{ave} are the same as their pre-shutdown 100 percent power values.)

A. 813 psia

B. 841 psia

C. 870 psia

D. 900 psia

ANSWER: D.

TOPIC: 193003
KNOWLEDGE: K1.25 [3.3/3.4]
QID: P3775 (B3774)

A 100 ft^3 vessel contains a saturated steam-water mixture at 1,000 psia. The water portion occupies 30 ft^3 and the steam portion occupies the remaining 70 ft^3. What is the approximate total mass of the mixture in the vessel?

A. 1,547 lbm

B. 2,612 lbm

C. 3,310 lbm

D. 4,245 lbm

ANSWER: A.

TOPIC: 193003
KNOWLEDGE: K1.25 [3.3/3.4]
QID: P3875

A nuclear power plant has been operating at full power for six months when a sustained station blackout occurs, resulting in a reactor trip and a complete loss of forced reactor coolant circulation. All means of reactor coolant injection and steam generator heat removal are unavailable. Reactor coolant system (RCS) pressure is being maintained at approximately 2,100 psia by operation of the pressurizer relief valves.

The following conditions exist five minutes after the reactor trip:

RCS pressure	=	2,100 psia
Core exit thermocouple (CET) temperature	=	550°F

With RCS pressure constant at 2,100 psia, which one of the following describes the future response of the CET temperature indication?

A. CET indication will remain stable at approximately 550°F until the core becomes uncovered; then, CET indication will become erratic.

B. CET indication will remain stable at approximately 550°F until the core becomes uncovered; then, CET indication will increase to approximately 643°F where it will become erratic.

C. CET indication will steadily increase to approximately 643°F and stabilize; then, as the core begins to uncover, CET indication will increase further until it becomes erratic.

D. CET indication will steadily increase until it becomes erratic.

ANSWER: C.

TOPIC: 193003
KNOWLEDGE: K1.25 [3.3/3.4]
QID: P3939 (B3938)

Main steam is being used to reheat high pressure (HP) turbine exhaust in a moisture separator-reheater (MSR).

Given:

- The HP turbine exhaust enters the MSR reheater section as dry saturated steam.
- The exhaust enters and exits the reheater section at 280 psia and a flow rate of 1.0E6 lbm/hr.
- The main steam heat transfer rate in the reheater section is 42.1E6 Btu/hr.

Which one of the following is the approximate temperature of the HP turbine exhaust leaving the reheater section of the MSR?

A. 450°F

B. 475°F

C. 500°F

D. 525°F

ANSWER: B.

TOPIC: 193003
KNOWLEDGE: K1.25 [3.3/3.4]
QID: P4139 (B4138)

A saturated steam-water mixture at 50 percent quality is leaving a main turbine at 1.0×10^6 lbm/hr and entering a condenser at 1.6 psia. Condensate enters the hotwell at 112°F.

Which one of the following is the approximate condenser heat transfer rate?

A. 3.1×10^8 Btu/hr

B. 3.8×10^8 Btu/hr

C. 4.5×10^8 Btu/hr

D. 5.2×10^8 Btu/hr

ANSWER: D.

TOPIC: 193003
KNOWLEDGE: K1.25 [3.3/3.4]
QID: P4339 (B4338)

A nuclear power plant is operating at 100 percent power. The main turbine has one high pressure (HP) unit and one low pressure (LP) unit.

Main steam enters the HP unit of the main turbine with the following parameters:

Pressure = 1,000 psia
Quality = 100 percent

The exhaust steam exits the HP unit at 200 psia, then goes through a moisture separator-reheater, and enters the LP units with the following parameters:

Pressure = 200 psia
Temperature = 500°F

The main condenser pressure is 1.0 psia. Assume that each unit of the main turbine is 100 percent efficient.

The higher enthalpy steam is being supplied to the _____ unit of the main turbine; and the greater moisture content is found in the exhaust of the _____ unit.

A. LP; LP

B. LP; HP

C. HP; LP

D. HP; HP

ANSWER: A.

TOPIC: 193003
KNOWLEDGE: K1.25 [3.3/3.4]
QID: P4739 (B4738)

Consider a 100 lbm quantity of a saturated steam-water mixture at standard atmospheric pressure. The mixture has a quality of 70 percent. Assume that pressure remains constant and there is no heat loss from the mixture.

Which one of the following is the approximate heat addition needed to increase the quality of the mixture to 100 percent?

A. 5,400 Btu

B. 12,600 Btu

C. 29,100 Btu

D. 67,900 Btu

ANSWER: C.

TOPIC: 193003
KNOWLEDGE: K1.25 [3.3/3.4]
QID: P4839 (B4838)

An open vessel contains 1.0 lbm-mass of water at 204°F and standard atmospheric pressure. If 16.0 Btu of heat is added to the water, the water temperature will rise by about _____; and approximately _____ of the water mass will become steam.

A. 8°F; 1 percent

B. 8°F; 10 percent

C. 16°F; 1 percent

D. 16°F; 10 percent

ANSWER: A.

TOPIC: 193003
KNOWLEDGE: K1.25 [3.3/3.4]
QID: P4939 (B4938)

Water enters an ideal convergent-divergent nozzle with the following parameters:

Pressure = 300 psia
Temperature = 102°F
Velocity = 50 ft/sec

The velocity of the water at the throat of the nozzle is 200 ft/sec.

Given that nozzles convert enthalpy to kinetic energy, and assuming no heat transfer to or from the nozzle, what is the approximate pressure of the water at the throat of the nozzle?

A. 296 psia

B. 150 psia

C. 75 psia

D. 50 psia

ANSWER: D.

TOPIC: 193003
KNOWLEDGE: K1.25 [3.3/3.4]
QID: P5039 (B5038)

An open vessel contains 1.0 lbm of water at 206°F and standard atmospheric pressure. Which one of the following will be caused by the addition of 12.0 Btu to the water?

A. The water temperature will rise by about 6°F and none of the water will vaporize.

B. The water temperature will rise by about 6°F and some of the water will vaporize.

C. The water temperature will rise by about 12°F and none of the water will vaporize.

D. The water temperature will rise by about 12°F and some of the water will vaporize.

ANSWER: B.

TOPIC: 193003
KNOWLEDGE: K1.25 [3.3/3.4]
QID: P5139 (B5138)

A feedwater pump discharges into a 16-inch diameter discharge line. Given the following:

Pump discharge pressure = 950 psia
Feedwater temperature = 300°F
Feedwater velocity = 15.2 ft/sec

What is the feedwater pump discharge mass flow rate?

A. 1.1×10^6 lbm/hr

B. 4.4×10^6 lbm/hr

C. 1.8×10^7 lbm/hr

D. 5.3×10^7 lbm/hr

ANSWER: B.

TOPIC: 193003
KNOWLEDGE: K1.25 [3.3/3.4]
QID: P5239 (B5238)

Dry saturated steam enters a frictionless convergent-divergent nozzle with the following parameters:

Pressure = 850 psia
Velocity = 10 ft/sec

The steam at the throat of the nozzle has a subsonic velocity of 950 ft/sec.

Given that nozzles convert enthalpy to kinetic energy, and assuming no heat transfer to or from the nozzle, what is the enthalpy of the steam at the throat of the nozzle?

A. 1,162 Btu/lbm

B. 1,171 Btu/lbm

C. 1,180 Btu/lbm

D. 1,189 Btu/lbm

ANSWER: C.

TOPIC: 193003
KNOWLEDGE: K1.25 [3.3/3.4]
QID: P5439 (B5438)

An ideal auxiliary steam turbine exhausts to the atmosphere. The steam turbine is supplied with dry saturated steam at 900 psia. Which one of the following is the maximum specific work (Btu/lbm) that can be extracted from the steam by the steam turbine?

A. 283 Btu/lbm

B. 670 Btu/lbm

C. 913 Btu/lbm

D. 1,196 Btu/lbm

ANSWER: A.

TOPIC: 193003
KNOWLEDGE: K1.25 [3.3/3.4]
QID: P5639

An ideal steam turbine exhausts to a steam condenser at 1.0 psia. The turbine is driven by dry saturated steam at 600 psia. What is the work (Btu/hr) of the steam turbine if the turbine steam flow rate is 200,000 lbm/hr?

A. 7.9×10^6 Btu/hr

B. 1.6×10^7 Btu/hr

C. 7.9×10^7 Btu/hr

D. 1.6×10^8 Btu/hr

ANSWER: C.

TOPIC: 193003
KNOWLEDGE: K1.25 [3.3/3.4]
QID: P5739 (B5738)

A steam turbine exhausts to a steam condenser at 1.0 psia. The steam turbine is supplied with dry saturated steam at 900 psia at a flow rate of 200,000 lbm/hr. What is the approximate rate of condensate addition to the condenser hotwell in gallons per minute?

A. 400 gpm

B. 2,400 gpm

C. 4,000 gpm

D. 24,000 gpm

ANSWER: A.

TOPIC: 193003
KNOWLEDGE: K1.25 [3.3/3.4]
QID: P5939

What happens to the enthalpy of the saturated steam in a steam generator (SG) as heat addition increases SG pressure from 100 psia to 1,000 psia?

A. The enthalpy increases during the entire pressure increase.

B. The enthalpy initially increases and then decreases.

C. The enthalpy decreases during the entire pressure increase.

D. The enthalpy initially decreases and then increases.

ANSWER: B.

TOPIC: 193003
KNOWLEDGE: K1.25 [3.3/3.4]
QID: P6139 (B6113)

Water enters a positive displacement pump at 50 psig and 90°F. What is the available net positive suction head for the pump?

A. 80 feet

B. 114 feet

C. 133 feet

D. 148 feet

ANSWER: D.

TOPIC: 193003
KNOWLEDGE: K1.25 [3.3/3.4]
QID: P6339 (B6338)

Dry saturated steam is flowing to a reheater. The reheater inlet and outlet pressures are both 260 psia. If the reheater adds 60.5 Btu/lbm to the steam, what is the temperature of the steam exiting the reheater?

A. 405°F

B. 450°F

C. 465°F

D. 500°F

ANSWER: D.

TOPIC: 193003
KNOWLEDGE: K1.25 [3.3/3.4]
QID: P6439 (B6438)

An open vessel contains 5.0 lbm of water at constant standard atmospheric pressure. The water has been heated to the saturation temperature. If an additional 1,600 Btu is added to the water, the water temperature will _____, and _____ than 50 percent of the water will vaporize.

A. increase significantly; less

B. increase significantly; more

C. remain about the same; less

D. remain about the same; more

ANSWER: C.

TOPIC: 193003
KNOWLEDGE: K1.25 [3.3/3.4]
QID: P6639 (B6638)

Dry saturated steam at 240 psia enters an ideal low pressure (LP) turbine and exhausts to a steam condenser at 1.0 psia. Compared to the LP turbine entry conditions, the volumetric flow rate of the steam leaving the LP turbine will be about _____ times larger.

A. 103

B. 132

C. 174

D. 240

ANSWER: B.

TOPIC: 193003
KNOWLEDGE: K1.25 [3.3/3.4]
QID: P7239 (B7238)

An open vessel contains 1.0 lbm of water at 120°F and standard atmospheric pressure. Which one of the following will be caused by the addition of 540 Btu to the water?

A. The water temperature will increase to approximately 212°F; and less than 50 percent of the water will vaporize.

B. The water temperature will increase to approximately 212°F; and more than 50 percent of the water will vaporize.

C. The water temperature will increase to significantly higher than 212°F; and less than 50 percent of the water will vaporize.

D. The water temperature will increase to significantly higher than 212°F; and more than 50 percent of the water will vaporize.

ANSWER: A.

TOPIC: 193003
KNOWLEDGE: K1.25 [3.3/3.4]
QID: P7339 (B7338)

Dry saturated steam at 1,000 psia enters an ideal high pressure (HP) turbine and exhausts at 100 psia. The HP turbine exhaust then enters an ideal low pressure (LP) turbine and exhausts to a steam condenser at 1.5 psia. Which one of the following will cause the HP and LP turbines to produce more equal power? (Assume all pressures remain the same unless stated otherwise.)

A. Reheat the HP turbine exhaust.

B. Lower the steam condenser pressure.

C. Remove the moisture from the HP turbine exhaust.

D. Decrease the pressure of the dry saturated steam entering the HP turbine.

ANSWER: C.

TOPIC: 193003
KNOWLEDGE: K1.25 [3.3/3.4]
QID: P7439

A nuclear power plant experienced a reactor trip. One hour after the trip, core cooling is being accomplished by relieving dry saturated steam from a steam generator (SG). Water level in the SG is being maintained by an operating feedwater pump. Average fuel temperature is stable.

Given the following current conditions:

Core decay heat rate	=	33 MW
SG pressure	=	1,000 psia
Feedwater temperature	=	90°F

For the above conditions, approximately what feedwater flow rate is needed to maintain a constant mass of water in the SG?

A. 100,000 lbm/hr

B. 125,000 lbm/hr

C. 170,000 lbm/hr

D. 215,000 lbm/hr

ANSWER: A.

TOPIC: 193003
KNOWLEDGE: K1.25 [3.3/3.4]
QID: P7539 (B7538)

Subcooled water is flowing through a heat exchanger with the following parameters:

Inlet temperature = 75°F
Outlet temperature = 120°F
Mass flow rate = 6.0×10^4 lbm/hr

What is the approximate heat transfer rate in the heat exchanger?

A. 1.1×10^6 Btu/hr

B. 2.1×10^6 Btu/hr

C. 2.7×10^6 Btu/hr

D. 3.3×10^6 Btu/hr

ANSWER: C.

TOPIC: 193003
KNOWLEDGE: K1.25 [3.3/3.4]
QID: P7609 (B7609)

A main condenser is operating at 1.0 psia. If 20,000 ft^3 of dry saturated steam is condensed to saturated water in the condenser, what will be the approximate volume of the saturated water?

A. 1 ft^3

B. 10 ft^3

C. 100 ft^3

D. 1,000 ft^3

ANSWER: A.

TOPIC: 193003
KNOWLEDGE: K1.25 [3.3/3.4]
QID: P7629 (B7629)

An open vessel contains 2.0 lbm of water at 200°F and standard atmospheric pressure. Which one of the following will be caused by the addition of 16.0 Btu to the water?

A. The water temperature will increase, and all of the water will boil off.

B. The water temperature will increase, and none of the water will boil off.

C. The water temperature will rise to 212°F, and some of the water will boil off.

D. The water temperature will rise to 216°F, and some of the water will boil off.

ANSWER: B.

TOPIC: 193003
KNOWLEDGE: K1.25 [3.3/3.4]
QID: P7659 (B7659)

Dry saturated steam at 900 psia enters an ideal high pressure (HP) turbine and exhausts at 240 psia. How much heat, if any, must be added to the HP turbine exhaust to produce dry saturated steam at 240 psia?

A. 0 Btu/lbm

B. 11 Btu/lbm

C. 111 Btu/lbm

D. 155 Btu/lbm

ANSWER: C.

TOPIC: 193003
KNOWLEDGE: K1.25 [3.3/3.4]
QID: P7679 (B7679)

Dry saturated steam enters a turbine at 1000 psia with the turbine exhaust pressure at 2 psia. The efficiency of the turbine is 85 percent. What is the approximate specific work output of the turbine?

A. 329 Btu/lbm

B. 355 Btu/lbm

C. 387 Btu/lbm

D. 455 Btu/lbm

ANSWER: A.

TOPIC: 193003
KNOWLEDGE: K1.25 [3.3/3.4]
QID: P7699 (B7699)

Saturated steam at 900 psia enters a high pressure (HP) turbine and exhausts at 200 psia. The HP turbine exhaust passes through a 100 percent efficient moisture separator (with no heat gain or loss) before it enters a low pressure (LP) turbine. What is the enthalpy of the 200 psia steam entering the LP turbine?

A. 1,028 Btu/lbm

B. 1,076 Btu/lbm

C. 1,107 Btu/lbm

D. 1,199 Btu/lbm

ANSWER: D.

TOPIC: 193004
KNOWLEDGE: K1.11 [2.4/2.5]
QID: P74 (B2277)

Condensate depression is the process of...

A. removing condensate from turbine exhaust steam.

B. spraying condensate into turbine exhaust steam.

C. heating turbine exhaust steam above its saturation temperature.

D. cooling turbine exhaust steam below its saturation temperature.

ANSWER: D.

TOPIC: 193004
KNOWLEDGE: K1.11 [2.4/2.5]
QID: P274

Excessive heat removal from the low pressure turbine exhaust steam in the main condenser will result in...

A. thermal shock.

B. loss of condenser vacuum.

C. condensate depression.

D. fluid compression.

ANSWER: C.

TOPIC: 193004
KNOWLEDGE: K1.11 [2.4/2.5]
QID: P477 (B277)

Main condenser pressure is 1.0 psia. During the cooling process in the condenser, the temperature of the low pressure turbine exhaust decreases to 100°F, at which time it is a...

A. saturated liquid.

B. saturated vapor.

C. subcooled liquid.

D. superheated vapor.

ANSWER: C.

TOPIC: 193004
KNOWLEDGE: K1.11 [2.4/2.5]
QID: P576 (B2676)

Which one of the following explains why condensate subcooling is necessary in a nuclear power plant steam cycle?

A. To provide a better condenser vacuum.

B. To maximize overall steam cycle thermal efficiency.

C. To provide net positive suction head for the condensate pumps.

D. To minimize turbine blade and condenser tube erosion by entrained moisture.

ANSWER: C.

TOPIC: 193004
KNOWLEDGE: K1.11 [2.4/2.5]
QID: P876 (B1876)

Which one of the following is the approximate condensate subcooling in a steam condenser operating at 26 inches Hg vacuum with a condensate temperature of 100°F?

A. 2°F

B. 19°F

C. 25°F

D. 53°F

ANSWER: C.

TOPIC: 193004
KNOWLEDGE: K1.11 [2.4/2.5]
QID: P1076

Which one of the following is a positive effect of having condensate depression in the main condenser?

A. Increased secondary cycle efficiency.

B. Increased feedwater temperature entering the steam generators.

C. Increased net positive suction head available to the condensate pumps.

D. Increased inventory in the main condenser hotwell.

ANSWER: C.

TOPIC: 193004
KNOWLEDGE: K1.11 [2.4/2.5]
QID: P1176 (B2176)

A nuclear power plant is operating at 80 percent power with 5°F of condensate depression in the main condenser. If the condensate depression increases to 10°F, the steam cycle thermal efficiency will _____; and the condensate pumps will operate _____ cavitation.

A. increase; closer to

B. increase; farther from

C. decrease; closer to

D. decrease; farther from

ANSWER: D.

TOPIC: 193004
KNOWLEDGE: K1.11 [2.4/2.5]
QID: P1376

What is the approximate value of condensate depression in a steam condenser operating at 2.0 psia with a condensate temperature of 115°F?

A. 9°F

B. 11°F

C. 13°F

D. 15°F

ANSWER: B.

TOPIC: 193004
KNOWLEDGE: K1.11 [2.4/2.5]
QID: P1576 (B2976)

What is the approximate condensate depression in a condenser operating at 28 inches Hg vacuum with a condensate temperature of 100°F?

A. Less than 2°F

B. 3°F to 5°F

C. 6°F to 8°F

D. 9°F to 11°F

ANSWER: A.

TOPIC: 193004
KNOWLEDGE: K1.11 [2.4/2.5]
QID: P1977

Condensate is collecting in a main condenser hotwell at 90°F with a condenser pressure of 28 inches Hg vacuum. Which one of the following will improve steam cycle efficiency?

A. Main condenser cooling water flow rate decreases by 5 percent with no change in condenser vacuum.

B. Main condenser cooling water inlet temperature decreases by 10°F with no change in condenser vacuum.

C. Main condenser vacuum decreases to 27 inches Hg vacuum due to buildup of noncondensible gases.

D. Steam flow through the turbine decreases by 10 percent with no change in condenser vacuum.

ANSWER: A.

TOPIC: 193004
KNOWLEDGE: K1.11 [2.4/2.5]
QID: P2276 (B78)

The steam cycle thermal efficiency of a nuclear power plant can be increased by...

A. decreasing power from 100 percent to 25 percent.

B. removing a high-pressure feedwater heater from service.

C. lowering condenser vacuum from 29 inches to 25 inches.

D. decreasing the amount of condensate depression (subcooling).

ANSWER: D.

TOPIC: 193004
KNOWLEDGE: K1.11 [2.4/2.5]
QID: P2476 (B2077)

A nuclear power plant is operating at 90 percent of rated power. Main condenser pressure is 1.69 psia and hotwell condensate temperature is 120°F.

Which one of the following describes the effect of a 5 percent decrease in cooling water flow rate through the main condenser on steam cycle thermal efficiency?

A. Efficiency will increase because condensate depression will decrease.

B. Efficiency will increase because the work output of the main turbine will increase.

C. Efficiency will decrease because condensate depression will increase.

D. Efficiency will decrease because the work output of the main turbine will decrease.

ANSWER: D.

TOPIC: 193004
KNOWLEDGE: K1.11 [2.4/2.5]
QID: P2576 (B2576)

A nuclear power plant is operating at 80 percent power with 5°F of condensate depression in the main condenser. If the condensate depression decreases to 2°F, the steam cycle thermal efficiency will _____; and the condensate pumps will operate _____ cavitation.

A. increase; closer to

B. increase; farther from

C. decrease; closer to

D. decrease; farther from

ANSWER: A.

TOPIC: 193004
KNOWLEDGE: K1.11 [2.4/2.5]
QID: P2976

What is the approximate value of condensate depression in a condenser operating at 27 inches Hg vacuum with a condensate temperature of 100°F?

A. 2°F

B. 4°F

C. 8°F

D. 16°F

ANSWER: D.

TOPIC: 193004
KNOWLEDGE: K1.11 [2.4/2.5]
QID: P3576 (B1484)

A main condenser is operating at 28 inches Hg vacuum with a condensate outlet temperature of 92°F. Which one of the following is the approximate amount of condensate depression?

A. 5°F

B. 9°F

C. 13°F

D. 17°F

ANSWER: B.

TOPIC: 193004
KNOWLEDGE: K1.11 [2.4/2.5]
QID: P3876 (B3877)

Main turbine exhaust enters a main condenser and condenses at 126°F. The condensate is cooled to 100°F before entering the main condenser hotwell. Assuming main condenser vacuum does <u>not</u> change, which one of the following would improve the thermal efficiency of the steam cycle?

A. Increase condenser cooling water flow rate by 5 percent.

B. Decrease condenser cooling water flow rate by 5 percent.

C. Increase main condenser hotwell level by 5 percent.

D. Decrease main condenser hotwell level by 5 percent.

ANSWER: B.

TOPIC: 193004
KNOWLEDGE: K1.15 [2.8/2.8]
QID: P76

A nuclear power plant is maintained at 2,000 psia with a pressurizer temperature of 636°F. A pressurizer relief safety valve is leaking to a collection tank which is being held at 10 psig. With dry saturated steam in the pressurizer vapor space, which one of the following is the approximate temperature of the fluid just downstream of the relief valve?

A. 280°F

B. 240°F

C. 190°F

D. 170°F

ANSWER: B.

TOPIC: 193004
KNOWLEDGE: K1.15 [2.8/2.8]
QID: P148

A pressurizer relief valve is leaking by with the leakage being collected in a pressurizer relief tank. The pressurizer pressure is 2,200 psia and the relief tank pressure is 5 psig.

With dry saturated steam in the pressurizer vapor space, which one of the following is the condition of the fluid just downstream of the relief valve?

A. Superheated steam

B. Subcooled liquid

C. Dry saturated steam

D. Wet vapor

ANSWER: D.

TOPIC: 193004
KNOWLEDGE: K1.15 [2.8/2.8]
QID: P276

A reactor coolant system is being maintained at 1,000 psia. A leaky pressurizer safety/relief valve is slowly discharging to a collection tank, which is maintained at 5 psig.

With dry saturated steam in the pressurizer vapor space, what is the approximate enthalpy of the fluid entering the collection tank? (Assume no heat is lost from the discharge line.)

A. 1,210 Btu/lbm

B. 1,193 Btu/lbm

C. 1,178 Btu/lbm

D. 1,156 Btu/lbm

ANSWER: B.

TOPIC: 193004
KNOWLEDGE: K1.15 [2.8/2.8]
QID: P377

What is the approximate temperature and phase of the fluid just downstream of the pressurizer relief valve if it sticks partially open with 2,200 psia in the pressurizer and a 50 psia backpressure? (Assume the pressurizer vapor space contains dry saturated steam.)

A. 281°F, saturated

B. 281°F, superheated

C. 332°F, saturated

D. 332°F, superheated

ANSWER: A.

TOPIC: 193004
KNOWLEDGE: K1.15 [2.8/2.8]
QID: P677

A routine nuclear power plant shutdown is in progress with a steam bubble (dry saturated steam) in the pressurizer. Pressurizer pressure is 415 psig and pressurizer pressure and level are slowly decreasing. The operator suspects a pressurizer power-operated relief valve (PORV) is partially open but the position indicating lights are not working.

Which one of the following will be the approximate PORV tailpipe temperature if the PORV is partially open? (Assume downstream pressure is 15 psia and no heat is lost from the tailpipe.)

A. 212°F

B. 280°F

C. 330°F

D. 450°F

ANSWER: C.

TOPIC: 193004
KNOWLEDGE: K1.15 [2.8/2.8]
QID: P150

A nuclear power plant is operating at 100 percent power. As steam escapes via a main steam header-to-atmosphere leak, which one of the following steam parameters will increase?

A. Enthalpy

B. Pressure

C. Specific volume

D. Temperature

ANSWER: C.

TOPIC: 193004
KNOWLEDGE: K1.15 [2.8/2.8]
QID: P1277

A heatup and pressurization of the reactor coolant system (RCS) is in progress following a maintenance shutdown. RCS pressure is 800 psia with a steam bubble (97.5 percent quality saturated steam) in the pressurizer. Pressurizer power-operated relief valve (PORV) tailpipe temperature has been steadily rising. PORV downstream pressure is 30 psia.

Which one of the following will be the approximate PORV tailpipe temperature if a PORV is leaking by? (Assume no heat is lost from the tailpipe.)

A. 262°F

B. 284°F

C. 302°F

D. 324°F

ANSWER: B.

TOPIC: 193004
KNOWLEDGE: K1.15 [2.8/2.8]
QID: P1477

A nuclear power plant is operating at 100 percent power with steam generator pressure at 900 psia. A steam generator safety valve is leaking dry saturated steam to atmosphere.

Which one of the following is the approximate temperature of the escaping steam once it reaches standard atmospheric pressure?

A. 532°F

B. 370°F

C. 308°F

D. 212°F

ANSWER: C.

TOPIC: 193004
KNOWLEDGE: K1.15 [2.8/2.8]
QID: P1577

A heatup and pressurization of the reactor coolant system (RCS) is in progress following a maintenance shutdown. RCS pressure is 800 psia with a steam bubble (96.0 percent quality saturated steam) in the pressurizer. Pressurizer power-operated relief valve (PORV) tailpipe temperature has been steadily rising. PORV downstream pressure is 20 psia.

Which one of the following will be the approximate PORV tailpipe temperature if a PORV is leaking by?

A. 226°F

B. 258°F

C. 284°F

D. 320°F

ANSWER: B.

TOPIC: 193004
KNOWLEDGE: K1.15 [2.8/2.8]
QID: P1677

A nuclear power plant is being maintained at 2,220 psig. A pressurizer relief valve is leaking dry saturated steam to a collection tank, which is being held at 20 psig.

Which one of the following is the approximate temperature of the fluid downstream of the relief valve?

A. 162°F

B. 228°F

C. 259°F

D. 320°F

ANSWER: C.

TOPIC: 193004
KNOWLEDGE: K1.15 [2.8/2.8]
QID: P1777

Which one of the following is essentially a constant enthalpy process?

A. Steam flowing through an ideal convergent nozzle.

B. Condensation of turbine exhaust in a main condenser.

C. Expansion of main steam through the stages of an ideal turbine.

D. Throttling of main steam through a main turbine steam inlet valve.

ANSWER: D.

TOPIC: 193004
KNOWLEDGE: K1.15 [2.8/2.8]
QID: P2077 (B2075)

A nuclear power plant is operating with the following main steam parameters at the main turbine steam inlet valves:

Pressure = 900 psia
Quality = 98 percent

The main turbine steam chest pressure is 400 psia. Assuming an ideal throttling process, what is the quality of the steam in the steam chest?

A. 97 percent

B. 98 percent

C. 99 percent

D. 100 percent

ANSWER: A.

TOPIC: 193004
KNOWLEDGE: K1.15 [2.8/2.8]
QID: P2377

A heatup and pressurization of the reactor coolant system (RCS) is in progress following a maintenance shutdown. RCS pressure is 800 psia with a steam bubble (96.0 percent quality saturated steam) in the pressurizer. Pressurizer power-operated relief valve (PORV) tailpipe temperature has been steadily rising. PORV downstream pressure is 20 psia.

Which one of the following will be the approximate PORV tailpipe temperature and phase of the escaping fluid if a PORV is leaking by?

A. 258°F, saturated

B. 258°F, superheated

C. 228°F, saturated

D. 228°F, superheated

ANSWER: B.

TOPIC: 193004
KNOWLEDGE: K1.15 [2.8/2.8]
QID: P2876

Refer to the drawing of two 1,000 ft^3 pressure vessels with installed relief valves (see figure below).

Both vessels are in saturated conditions at 281°F and approximately 35 psig. Vessel A is completely filled with saturated water. Vessel B contains one-half saturated steam (100 percent quality) and one-half saturated water (0 percent quality) by volume. Both vessels are protected by identical relief valves.

If both relief valves begin to leak at a rate of 0.1 percent of design flow, the higher temperature fluid will initially be leaving the relief valve of vessel _____. And, if 100 lbm of fluid is released through both relief valves, the larger pressure decrease will occur in vessel _____.

A. A; A

B. A; B

C. B; A

D. B; B

ANSWER: D.

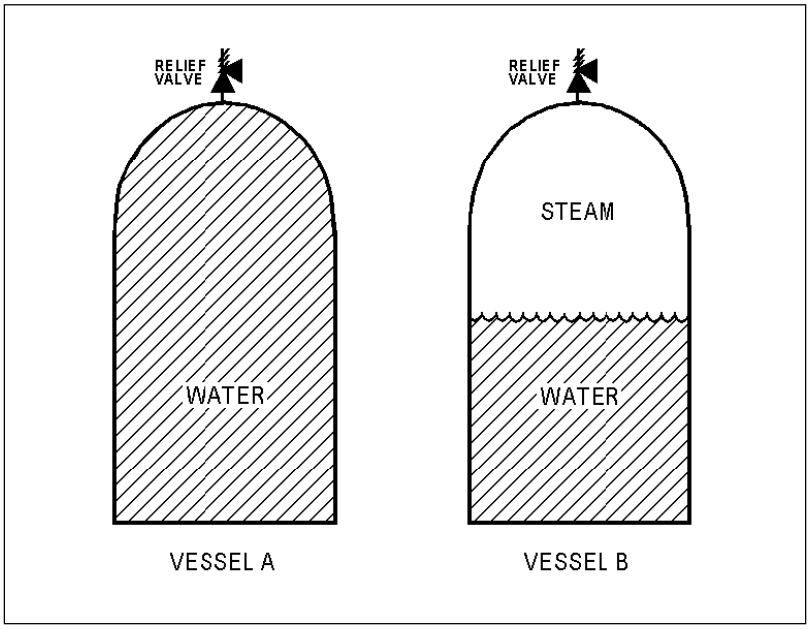

TOPIC: 193004
KNOWLEDGE: K1.15 [2.8/2.8]
QID: P3077 (B3074)

A nuclear power plant is operating at 100 percent power. Steam is escaping to atmosphere through a flange leak in a steam supply line to the low pressure section of the main turbine.

Given:

- Steam line pressure is 300 psia.
- Steam line steam temperature is 440°F.

What is the approximate temperature of the steam as it reaches standard atmospheric pressure?

A. 212°F

B. 268°F

C. 322°F

D. 358°F

ANSWER: D.

TOPIC: 193004
KNOWLEDGE: K1.15 [2.8/2.8]
QID: P3277

A nuclear power plant is operating at 100 percent power. Steam is escaping to atmosphere through a flange leak in a steam line that supplies the low pressure unit of the main turbine.

Given:

- Steam line pressure is 280 psia.
- Steam line steam temperature is 450°F.

What is the approximate temperature of the steam as it reaches standard atmospheric pressure?

A. 212°F

B. 268°F

C. 322°F

D. 378°F

ANSWER: D.

TOPIC: 193004
KNOWLEDGE: K1.15 [2.8/2.8]
QID: P3477

A pressurizer safety valve is leaking by, allowing the dry saturated steam in the pressurizer to flow to the pressurizer relief tank (PRT). The reactor has been shut down, and a plant cooldown and depressurization are in progress. PRT pressure is being maintained constant at 35 psia.

Which one of the following describes how the safety valve tailpipe temperature will be affected as pressurizer pressure slowly decreases from 1,500 psia to 500 psia? (Assume there is <u>no</u> ambient heat loss from the tailpipe.)

A. Increases, because the entropy of the pressurizer steam will be increasing.

B. Increases, because the enthalpy of the pressurizer steam will be increasing.

C. Decreases, because the mass flow rate of the leaking steam will be decreasing.

D. Decreases, because the temperature of the pressurizer steam will be decreasing.

ANSWER: B.

TOPIC: 193004
KNOWLEDGE: K1.15 [2.8/2.8]
QID: P3577 (B3575)

Dry saturated steam at 1,000 psia is being supplied to the inlet of a partially open steam throttle valve on a main turbine. Pressure in the steam chest downstream of the throttle valve is 150 psia. Assume a typical throttling process with no heat gain or loss to/from the steam.

When compared to the conditions at the inlet to the throttle valve, which one of the following describes the conditions in the steam chest for specific enthalpy and specific entropy?

	Steam Chest Specific Enthalpy	Steam Chest Specific Entropy
A.	About the same	About the same
B.	About the same	Significantly higher
C.	Significantly lower	About the same
D.	Significantly lower	Significantly higher

ANSWER: B.

TOPIC: 193004
KNOWLEDGE: K1.15 [2.8/2.8]
QID: P3677 (B3675)

A nuclear power plant is shut down and steam is escaping to atmosphere through a leak in a main steam line. The main steam line contains dry saturated steam at 300 psia. What is the approximate temperature of the steam as it reaches standard atmospheric pressure?

A. 212°F

B. 268°F

C. 322°F

D. 358°F

ANSWER: C.

TOPIC: 193004
KNOWLEDGE: K1.15 [2.8/2.8]
QID: P4040

A heatup and pressurization of a reactor coolant system (RCS) is in progress following a maintenance shutdown. RCS pressure is 1,000 psia with a steam bubble (dry saturated steam) in the pressurizer. Pressurizer power-operated relief valve (PORV) tailpipe temperature has been steadily rising. PORV downstream pressure is 40 psia.

Which one of the following will be the approximate PORV tailpipe temperature and phase of the escaping fluid if a PORV is leaking by?

A. 267°F, saturated

B. 267°F, superheated

C. 312°F, saturated

D. 312°F, superheated

ANSWER: D.

TOPIC: 193004
KNOWLEDGE: K1.15 [2.8/2.8]
QID: P5340 (B5338)

A nuclear power plant is operating with the following main steam parameters at the main turbine steam inlet valves:

Pressure = 900 psia
Quality = 99 percent

The main turbine steam chest pressure is 300 psia. Assuming an ideal throttling process, what is the quality of the steam in the steam chest?

A. 100 percent

B. 98 percent

C. 88 percent

D. 87 percent

ANSWER: B.

TOPIC: 193004
KNOWLEDGE: K1.15 [2.8/2.8]
QID: P5640

A pressurizer safety valve is leaking by, allowing 100 percent quality steam from the pressurizer to enter the discharge pipe, which remains at a constant pressure of 30 psig. Initial safety valve discharge pipe temperature is elevated but stable. Assume no heat loss from the safety valve discharge pipe.

Upon discovery of the leak, the reactor is shut down and a plant cooldown and depressurization are commenced. Throughout the cooldown and depressurization, dry saturated steam continues to leak through the pressurizer safety valve.

As pressurizer pressure decreases from 2,000 psig to 1,800 psig, the safety valve discharge pipe temperature will...

A. decrease, because the entropy of the safety valve discharge will decrease during the pressurizer pressure decrease.

B. decrease, because the enthalpy of the safety valve discharge will decrease during the pressurizer pressure decrease.

C. increase, because the safety valve discharge will become more superheated during the pressurizer pressure decrease.

D. remain the same, because the safety valve discharge will remain a saturated steam-water mixture at 30 psig.

ANSWER: D.

TOPIC: 193004
KNOWLEDGE: K1.15 [2.8/2.8]
QID: P6540 (B6538)

A nuclear power plant is operating at power. Steam is escaping to atmosphere through a flange leak in a steam line supplying the low pressure section of the main turbine.

Given:

- Steam line pressure is 200 psia.
- Steam line temperature is 400°F.

Assuming no heat transfer to/from the steam, what is the approximate temperature of the steam as it reaches atmospheric pressure?

A. 212°F

B. 284°F

C. 339°F

D. 375°F

ANSWER: C.

TOPIC: 193004
KNOWLEDGE: K1.15 [2.8/2.8]
QID: P7140 (B7138)

A nuclear power plant is operating with the following main steam parameters at the main turbine steam inlet valves:

Pressure = 1,050 psia
Quality = 100 percent

The main turbine steam chest pressure is 400 psia. Assuming an ideal throttling process, which one of the following describes the steam in the steam chest?

A. Saturated, 96 percent quality

B. Saturated, 98 percent quality

C. Saturated, 100 percent quality

D. Superheated

ANSWER: B.

TOPIC: 193004
KNOWLEDGE: K1.15 [2.8/2.8]
QID: P7610

A pressurizer safety valve is leaking by, allowing the dry saturated steam from the pressurizer to enter the discharge pipe, which remains at a constant pressure of 40 psia. Initial safety valve discharge pipe temperature is elevated but stable. Assume no heat loss occurs from the safety valve discharge pipe.

Upon discovery of the leak, the reactor is shut down, and a plant cooldown and depressurization are commenced. Throughout the cooldown and depressurization, dry saturated steam continues to leak through the pressurizer safety valve.

As pressurizer pressure decreases from 1,000 psia to 700 psia, the safety valve discharge pipe temperature will...

A. decrease, because the entropy of the safety valve discharge will decrease during the pressurizer pressure decrease in this range.

B. decrease, because the enthalpy of the safety valve discharge will decrease during the pressurizer pressure decrease in this range.

C. increase, because the safety valve discharge will become more superheated during the pressurizer pressure decrease in this range.

D. remain the same, because the safety valve discharge will remain a saturated steam-water mixture at 40 psia during the pressurizer pressure decrease in this range.

ANSWER: C.

TOPIC: 193004
KNOWLEDGE: K1.15 [2.8/2.8]
QID: P7619 (B7619)

A nuclear power plant is operating with the following main steam parameters at a partially open main turbine steam inlet valve:

Pressure = 1,000 psia
Quality = 100 percent

The main turbine steam chest pressure is 50 psia. Which one of the following describes the steam in the steam chest?

A. Saturated, 98 percent quality

B. Saturated, 99 percent quality

C. Saturated, 100 percent quality

D. Superheated

ANSWER: D.

TOPIC: 193005
KNOWLEDGE: K1.03 [2.5/2.6]
QID: P77

Overall nuclear power plant thermal efficiency will decrease if...

A. the temperature of the steam at the turbine exhaust increases.

B. additional moisture is removed from the steam entering the turbine.

C. the temperature of the feedwater entering the steam generator increases.

D. the amount of condensate depression (subcooling) in the main condenser decreases.

ANSWER: A.

TOPIC: 193005
KNOWLEDGE: K1.03 [2.5/2.6]
QID: P277

Which one of the following will cause overall nuclear power plant thermal efficiency to increase?

A. Increasing total steam generator blowdown from 30 gpm to 40 gpm.

B. Changing steam quality from 99.7 to 99.9 percent.

C. Bypassing a feedwater heater during normal plant operations.

D. Increasing condenser pressure from 1 psia to 2 psia.

ANSWER: B.

TOPIC: 193005
KNOWLEDGE: K1.03 [2.5/2.6]
QID: P378 (B3578)

Steam turbines X and Y are identical 100 percent efficient turbines that exhaust to a condenser at 1.0 psia. Dry saturated steam at 250 psia enters turbine X. Superheated steam at 250 psia and 500°F enters turbine Y.

Which one of the following lists the percentage of moisture at the exhaust of turbines X and Y?

	Turbine X	Turbine Y
A.	24.5%	20.5%
B.	26.3%	13.0%
C.	24.5%	13.0%
D.	26.3%	20.5%

ANSWER: A.

TOPIC: 193005
KNOWLEDGE: K1.03 [2.5/2.6]
QID: P379

Which one of the following actions will decrease overall nuclear power plant thermal efficiency?

A. Reducing turbine inlet steam moisture content.

B. Reducing condensate depression.

C. Increasing turbine exhaust pressure.

D. Increasing temperature of feedwater entering the steam generators.

ANSWER: C.

TOPIC: 193005
KNOWLEDGE: K1.03 [2.5/2.6]
QID: P478

To achieve maximum overall nuclear power plant thermal efficiency, feedwater should enter the steam generator (SG)_____ and the pressure difference between the SG and the condenser should be as _____ as possible.

A. close to saturation; great

B. close to saturation; small

C. as subcooled as practical; great

D. as subcooled as practical; small

ANSWER: A.

TOPIC: 193005
KNOWLEDGE: K1.03 [2.5/2.6]
QID: P878

Feedwater heating increases overall nuclear power plant thermal efficiency because...

A. the average temperature at which heat is transferred in the steam generators is increased.

B. less steam flow passes through the turbine, thereby increasing turbine efficiency.

C. increased feedwater temperature lowers the temperature at which heat is rejected in the condenser.

D. less power is required by the feedwater pumps to pump the warmer feedwater.

ANSWER: A.

TOPIC: 193005
KNOWLEDGE: K1.03 [2.5/2.6]
QID: P978

Which one of the following changes will increase the overall nuclear power plant thermal efficiency?

A. Decreasing the temperature of the feedwater entering the steam generators.

B. Decreasing the superheat of the steam entering the low pressure turbines.

C. Decreasing the circulating water flow rate through the main condenser.

D. Decreasing the concentration of noncondensible gases in the main condenser.

ANSWER: D.

TOPIC: 193005
KNOWLEDGE: K1.03 [2.5/2.6]
QID: P1378

Which one of the following actions will result in a <u>decrease</u> in overall nuclear power plant thermal efficiency?

A. Increasing the quality of the steam entering the main turbine.

B. Increasing the temperature of the feed water entering the steam generator.

C. Decreasing the amount of condensate depression in the main condenser.

D. Decreasing the amount of turbine steam extracted for feed water heating.

ANSWER: D.

TOPIC: 193005
KNOWLEDGE: K1.03 [2.5/2.6]
QID: P1478

Turbine X and turbine Y are ideal steam turbines that exhaust to a condenser at 1.0 psia. Turbine X is driven by dry saturated steam at 900 psia. Turbine Y is driven by superheated steam at 500 psia and 620°F.

The greater amount of specific work (Btu/lbm) is being performed by turbine _____, and the greater moisture content exists in the exhaust of turbine _____.

A. X; Y

B. X; X

C. Y; Y

D. Y; X

ANSWER: D.

TOPIC: 193005
KNOWLEDGE: K1.03 [2.5/2.6]
QID: P1678

Turbine X and turbine Y are ideal steam turbines that exhaust to a condenser at 1.0 psia. Turbine X is driven by dry saturated steam at 500 psia. Turbine Y is driven by dry saturated steam at 700 psia.

The greater amount of specific work (Btu/lbm) is being performed by turbine _____; and the greater moisture content exists in the exhaust of turbine _____.

A. X; X

B. X; Y

C. Y; X

D. Y; Y

ANSWER: D.

TOPIC: 193005
KNOWLEDGE: K1.03 [2.5/2.6]
QID: P1878 (B1879)

A nuclear power plant is operating at 85 percent power when the extraction steam to a high pressure feedwater heater is isolated. After the transient, the operator returns reactor power to 85 percent and stabilizes the plant. Compared to the conditions just prior to the transient, the current main generator output (MW) is...

A. higher, because increased steam flow to the main turbine caused the main generator to pick up load.

B. lower, because decreased steam flow to the main turbine caused the main generator to reject load.

C. higher, because the steam cycle thermal efficiency has increased.

D. lower, because the steam cycle thermal efficiency has decreased.

ANSWER: D.

TOPIC: 193005
KNOWLEDGE: K1.03 [2.5/2.6]
QID: P1980 (B1679)

A nuclear power plant is initially operating at 85 percent reactor power when extraction steam to a high-pressure feedwater heater is isolated. Main generator load is returned to its initial value. When the plant stabilizes, reactor power will be _____ than 85 percent; and the steam cycle thermal efficiency will be _____.

A. greater; lower

B. greater; higher

C. less; lower

D. less; higher

ANSWER: A.

TOPIC: 193005
KNOWLEDGE: K1.03 [2.5/2.6]
QID: P2078

A nuclear power plant is operating at 90 percent power. Main condenser pressure is 1.7 psia and hotwell condensate temperature is 120°F.

If main condenser cooling water flow rate is reduced by 5 percent, overall steam cycle efficiency will...

A. increase, because condensate depression will decrease.

B. decrease, because condensate depression will increase.

C. increase, because the work output of the main turbine will increase.

D. decrease, because the work output of the main turbine will decrease.

ANSWER: D.

TOPIC: 193005
KNOWLEDGE: K1.03 [2.5/2.6]
QID: P2178 (B2178)

If superheating of the inlet steam to a low pressure (LP) turbine is reduced, LP turbine work output will _____; and LP turbine exhaust moisture content will _____. (Assume steam mass flow rate does <u>not</u> change.)

A. remain the same; increase

B. remain the same; decrease

C. decrease; increase

D. decrease; decrease

ANSWER: C.

TOPIC: 193005
KNOWLEDGE: K1.03 [2.5/2.6]
QID: P2278 (B2978)

If the moisture content of the steam supplied to a main turbine increases, turbine work will...
(Assume the total mass flow rate does not change.)

A. decrease, because the enthalpy of the moist steam being supplied to the turbine has decreased.

B. decrease, because moist steam is more likely to leak between turbine stages.

C. increase, because the enthalpy of the moist steam being supplied to the turbine has increased.

D. increase, because moist steam is less likely to leak between turbine stages.

ANSWER: A.

TOPIC: 193005
KNOWLEDGE: K1.03 [2.5/2.6]
QID: P2478

Turbine X is an ideal steam turbine that exhausts to a condenser at 1.0 psia. Turbine X is driven by dry saturated steam at 500 psia. Which one of the following lists the approximate specific work output of turbine X and the moisture content of the steam exiting turbine X?

	Specific Work	Moisture Content
A.	388 Btu/lbm	72%
B.	388 Btu/lbm	28%
C.	817 Btu/lbm	72%
D.	817 Btu/lbm	28%

ANSWER: B.

TOPIC: 193005
KNOWLEDGE: K1.03 [2.5/2.6]
QID: P2678 (B1978)

If the moisture content of the steam supplied to a turbine decreases, the steam cycle thermal efficiency will increase because the...

A. enthalpy of the steam being supplied to the turbine has increased.

B. mass flow rate of the steam through the turbine has increased.

C. reheat capacity of the turbine extraction steam has increased.

D. the operating temperature of the turbine blades has increased.

ANSWER: A.

TOPIC: 193005
KNOWLEDGE: K1.03 [2.5/2.6]
QID: P2778 (B2774)

The theoretical maximum efficiency of a steam cycle is given by the equation:

$$Eff_{max} = (1 - T_{out}/T_{in}) \times 100\%$$

where T_{out} is the absolute temperature for heat rejection and T_{in} is the absolute temperature for heat addition. (Fahrenheit temperature is converted to absolute temperature by adding 460°F.)

A nuclear power plant is operating with a stable steam generator pressure of 900 psia. What is the approximate theoretical maximum steam cycle efficiency this plant can achieve by establishing its main condenser vacuum at 1.0 psia?

A. 35 percent

B. 43 percent

C. 65 percent

D. 81 percent

ANSWER: B.

TOPIC: 193005
KNOWLEDGE: K1.03 [2.5/2.6]
QID: P3078 (B3077)

Which one of the following will be caused by a decrease in main condenser vacuum (higher absolute pressure) in a nuclear power plant operating at 100 percent power? (Assume that main steam and main condenser circulating water mass flow rates do not change.)

A. Decrease in the condensate temperature.

B. Decrease in the ideal steam cycle thermal efficiency.

C. Decrease in the condensate pump required net positive suction head.

D. Decrease in the mass of noncondensible gases in the condenser.

ANSWER: B.

TOPIC: 193005
KNOWLEDGE: K1.03 [2.5/2.6]
QID: P3378 (B1278)

A nuclear power plant was initially operating at steady-state 90 percent reactor power when extraction steam to the feedwater heaters was isolated. With extraction steam still isolated, reactor power was returned to 90 percent and the plant was stabilized.

Compared to the initial main generator MW output, the current main generator MW output is...

A. lower, because the steam cycle is less efficient.

B. higher, because the steam cycle is less efficient.

C. lower, because more steam heat energy is available to the main turbine.

D. higher, because more steam heat energy is available to the main turbine.

ANSWER: A.

TOPIC: 193005
KNOWLEDGE: K1.03 [2.5/2.6]
QID: P4441

Consider the steam cycle thermal efficiency of a nuclear power plant operating at rated power.

If the pressure at which saturated steam is produced in the steam generators is increased, thermal efficiency will _____; and if the temperature of the feedwater entering the steam generators is increased, thermal efficiency will _____.

A. increase; increase

B. increase; decrease

C. decrease; increase

D. decrease; decrease

ANSWER: A.

TOPIC: 193005
KNOWLEDGE: K1.03 [2.5/2.6]
QID: P7241 (B7240)

A nuclear power plant has a thermal power rating of 3,200 MW. When the plant operates at 100 percent power, the main generator produces 1,200 MW at a 0.95 power factor. Plant modifications are planned that will upgrade the feedwater heaters and moisture separator/reheaters without changing the plant's thermal power rating. If the plant modifications improve plant thermal efficiency by 2 percent, what will be the resulting main generator electrical output at 100 percent reactor power with the same power factor?

A. 1,204 MW

B. 1,224 MW

C. 1,244 MW

D. 1,264 MW

ANSWER: D.

TOPIC: 193005
KNOWLEDGE: K1.03 [2.5/2.6]
QID: P7700 (B7700)

A nuclear reactor has a thermal power rating of 3,200 MW. When the reactor operates at 100 percent power, the main generator produces 1,200 MW at a 0.95 power factor. Modifications are planned that will upgrade major power plant equipment without changing the reactor's thermal power rating. If the modifications improve the power plant's thermal efficiency by 3 percent, what will be the resulting main generator electrical output with the same power factor at 100 percent reactor power?

A. 1,224 MW

B. 1,236 MW

C. 1,264 MW

D. 1,296 MW

ANSWER: D.

TOPIC: 193006
KNOWLEDGE: K1.04 [3.4/3.6]
QID: P78

The possibility of water hammer in a liquid system is minimized by...

A. maintaining temperature above the saturation temperature.

B. starting centrifugal pumps with the casing vent valve fully open.

C. starting positive displacement pumps with the discharge valve closed.

D. venting systems prior to starting centrifugal pumps.

ANSWER: D.

TOPIC: 193006
KNOWLEDGE: K1.04 [3.4/3.6]
QID: P278

Which one of the following methods will increase the possibility and/or severity of water hammer?

A. Opening and closing system valves slowly.

B. Venting fluid systems prior to starting a pump.

C. Starting a centrifugal pump with the discharge valve fully open.

D. Starting a centrifugal pump with the discharge valve fully closed.

ANSWER: C.

TOPIC: 193006
KNOWLEDGE: K1.04 [3.4/3.6]
QID: P679 (B279)

A sudden stop of fluid flow in a piping system, due to rapid closure of an isolation valve, will most likely result in...

A. check valve slamming.

B. pump runout.

C. water hammer.

D. pressurized thermal shock.

ANSWER: C.

TOPIC: 193006
KNOWLEDGE: K1.04 [3.4/3.6]
QID: P879

One reason for keeping condensate out of the steam lines is to...

A. minimize corrosion buildup.

B. reduce heat losses.

C. eliminate steam traps.

D. prevent water/steam hammer.

ANSWER: D.

TOPIC: 193006
KNOWLEDGE: K1.04 [3.4/3.6]
QID: P1079

The possibility of water hammer will be increased by...

A. maintaining the discharge line filled with liquid on an automatically starting pump.

B. condensation in a steam line just prior to initiating flow.

C. warming steam lines prior to initiating steam flow.

D. slowly closing the discharge valve on an operating pump.

ANSWER: B.

TOPIC: 193006
KNOWLEDGE: K1.04 [3.4/3.6]
QID: P1279

To minimize the possibility of water hammer when initiating flow in a system, the operator should...

A. vent the system prior to initiating flow.

B. vent the system only after flow has been initiated.

C. fully open the pump discharge valve prior to starting a pump.

D. rapidly open the pump discharge valve after a pump is running.

ANSWER: A.

TOPIC: 193006
KNOWLEDGE: K1.04 [3.4/3.6]
QID: P1879 (B2779)

Which one of the following describes why large steam lines are gradually warmed instead of suddenly admitting full steam flow?

A. To minimize the possibility of stress corrosion cracking of the steam lines.

B. To minimize the total thermal expansion of the steam lines.

C. To minimize the potential for water hammer in the steam lines.

D. To minimize the heat loss from the steam lines.

ANSWER: C.

TOPIC: 193006
KNOWLEDGE: K1.04 [3.4/3.6]
QID: P2079 (B2081)

Which one of the following will minimize the possibility of water hammer?

A. Draining the discharge line of a centrifugal pump after shutdown.

B. Draining condensate out of steam lines before and after initiating flow.

C. Starting a centrifugal pump with its discharge valve fully open.

D. Starting a positive displacement pump with its discharge valve partially closed.

ANSWER: B.

TOPIC: 193006
KNOWLEDGE: K1.04 [3.4/3.6]
QID: P2279 (B2679)

Which one of the following operating practices minimizes the possibility of water hammer?

A. Change valve positions as rapidly as possible.

B. Start centrifugal pumps with the discharge valve throttled.

C. Start positive displacement pumps with the discharge valve closed.

D. Vent systems only after initiating system flow.

ANSWER: B.

TOPIC: 193006
KNOWLEDGE: K1.04 [3.4/3.6]
QID: P4042 (B4041)

Refer to the drawing of two lengths of 6-inch diameter pipe, each containing an identical automatic isolation valve. The actual pipe lengths are proportional to their symbols in the drawing

Water at 65°F is flowing at 1,000 gpm through each pipe. If the isolation valves instantly close, valve A piping will experience a pressure increase that is _____ the pressure increase experienced by valve B piping; and the pressure spike will dissipate quicker in the _____ length of pipe.

A. equal to; shorter

B. equal to; longer

C. less than; shorter

D. less than; longer

ANSWER: A.

TOPIC: 193006
KNOWLEDGE: K1.04 [3.4/3.6]
QID: P6242 (B6241)

Refer to the drawing of two lengths of 16-inch diameter pipe, each containing an identical automatic isolation valve. The actual pipe lengths are proportional to their symbols in the drawing.

Water is flowing at 10,000 gpm through each pipe when both isolation valves instantly close. Consider two cases:

Case 1: The water temperature upstream of both valves is 65°F.
Case 2: The water temperature is 65°F upstream of valve A, and 85°F upstream of valve B.

For which case(s), if any, will valve A experience a pressure spike that is greater than the pressure spike at valve B?

A. Case 1 only

B. Case 2 only

C. Both cases

D. Neither case

ANSWER: B.

TOPIC: 193006
KNOWLEDGE: K1.04 [3.4/3.6]
QID: P6742 (B6741)

Refer to the drawing of two lengths of 16-inch diameter pipe, each containing an identical automatic isolation valve. The actual pipe lengths are proportional to their symbols in the drawing.

Water is flowing at 10,000 gpm through each pipe when both isolation valves instantly close.

Consider two cases:

Case 1: The water temperature upstream of both valves is 65°F.
Case 2: The water temperature is 85°F upstream of valve A, and 65°F upstream of valve B.

For which case(s), if any, will valve A experience a pressure spike that is greater than the pressure spike at valve B?

A. Case 1 only

B. Case 2 only

C. Both cases

D. Neither case

ANSWER: D.

TOPIC: 193006
KNOWLEDGE: K1.04 [3.4/3.6]
QID: P7620 (B7620)

Which one of the following will result in a higher probability and/or severity of water hammer in a flowing water system?

A. Gradual pipe bends rather than sharp pipe bends.

B. Shorter pipe lengths rather than longer pipe lengths.

C. Lower initial flow rates rather than higher initial flow rates.

D. Shorter valve stroke times rather than longer valve stroke times.

ANSWER: D.

TOPIC: 193006
KNOWLEDGE: K1.05 [2.9/3.0]
QID: P380 (B383)

An 85 gpm leak to atmosphere has developed from a cooling water system that is operating at 100 psig. Which one of the following will be the approximate leak rate when system pressure has decreased to 50 psig?

A. 33 gpm

B. 41 gpm

C. 52 gpm

D. 60 gpm

ANSWER: D.

TOPIC: 193006
KNOWLEDGE: K1.05 [2.9/3.0]
QID: P579

Mass flow rate equals volumetric flow rate times...

A. specific volume.

B. density.

C. specific gravity.

D. velocity.

ANSWER: B.

TOPIC: 193006
KNOWLEDGE: K1.05 [2.9/3.0]
QID: P680 (B681)

A 55 gpm leak to atmosphere has developed from a cooling water system that is operating at 100 psig. Which one of the following will be the approximate leak rate when system pressure has decreased to 50 psig?

A. 28 gpm

B. 32 gpm

C. 39 gpm

D. 45 gpm

ANSWER: C.

TOPIC: 193006
KNOWLEDGE: K1.05 [2.9/3.0]
QID: P1382

A 75 gpm leak to atmosphere has developed from a cooling water system that is operating at 80 psig. Which one of the following will be the approximate leak rate when system pressure has decreased to 40 psig?

A. 38 gpm

B. 44 gpm

C. 53 gpm

D. 59 gpm

ANSWER: C.

TOPIC: 193006
KNOWLEDGE: K1.05 [2.9/3.0]
QID: P1580 (B1979)

A 60 gpm leak to atmosphere has developed from a cooling water system that is operating at 150 psig. Which one of the following will be the approximate leak rate when system pressure has decreased to 75 psig?

A. 15 gpm

B. 30 gpm

C. 42 gpm

D. 53 gpm

ANSWER: C.

TOPIC: 193006
KNOWLEDGE: K1.05 [2.9/3.0]
QID: P1679 (B2981)

A 100 gpm leak to atmosphere has developed from a cooling water system that is operating at 60 psig. Which one of the following will be the approximate leak rate when system pressure has decreased to 20 psig?

A. 33 gpm

B. 53 gpm

C. 58 gpm

D. 71 gpm

ANSWER: C.

TOPIC: 193006
KNOWLEDGE: K1.05 [2.9/3.0]
QID: P1779 (B1783)

A 100 gpm leak to atmosphere has developed from a cooling water system that is operating at 45 psig. Which one of the following will be the approximate leak rate when system pressure has decreased to 30 psig?

A. 25 gpm

B. 50 gpm

C. 67 gpm

D. 82 gpm

ANSWER: D.

TOPIC: 193006
KNOWLEDGE: K1.05 [2.9/3.0]
QID: P1986

A 47 gpm leak to atmosphere has developed from a cooling water system that is operating at 150 psig. Which one of the following will be the approximate leak rate when system pressure has decreased to 75 psig?

A. 24 gpm

B. 33 gpm

C. 39 gpm

D. 46 gpm

ANSWER: B.

TOPIC: 193006
KNOWLEDGE: K1.05 [2.9/3.0]
QID: P2080 (B2080)

An 80 gpm leak to atmosphere has developed from a cooling water system that is operating at 100 psig. Which one of the following will be the approximate leak rate when system pressure has decreased to 75 psig?

A. 69 gpm

B. 60 gpm

C. 51 gpm

D. 40 gpm

ANSWER: A.

TOPIC: 193006
KNOWLEDGE: K1.05 [2.9/3.0]
QID: P2379 (B2381)

A 60 gpm leak to atmosphere has developed from a cooling water system that is operating at 150 psig. Which one of the following will be the approximate leak rate when system pressure has decreased to 100 psig?

A. 27 gpm

B. 35 gpm

C. 40 gpm

D. 49 gpm

ANSWER: D.

TOPIC: 193006
KNOWLEDGE: K1.05 [2.9/3.0]
QID: P2779 (B2781)

An 80 gpm leak to atmosphere has developed from a cooling water system that is operating at 150 psig. Which one of the following will be the approximate leak rate when system pressure has decreased to 75 psig?

A. 20 gpm

B. 40 gpm

C. 49 gpm

D. 57 gpm

ANSWER: D.

TOPIC: 193006
KNOWLEDGE: K1.05 [2.9/3.0]
QID: P2980

An 80 gpm leak to atmosphere has developed from a cooling water system that is operating at 150 psig. Which one of the following will be the approximate leak rate when system pressure has decreased to 100 psig?

A. 36 gpm

B. 53 gpm

C. 56 gpm

D. 65 gpm

ANSWER: D.

TOPIC: 193006
KNOWLEDGE: K1.05 [2.9/3.0]
QID: P3080 (B3181)

A 75 gpm leak to atmosphere has developed from a cooling water system that is operating at 100 psig. Which one of the following will be the approximate leak rate when system pressure has decreased to 80 psig?

A. 26 gpm

B. 39 gpm

C. 56 gpm

D. 67 gpm

ANSWER: D.

TOPIC: 193006
KNOWLEDGE: K1.05 [2.9/3.0]
QID: P3780

Which one of the following describes the relationship between the main steam mass flow rate leaving a steam generator and the main feedwater mass flow rate entering the same steam generator at steady-state power operation? (Assume no other addition/removal of steam generator inventory.)

A. The mass flow rates will be the same only if downcomer level is constant.

B. The mass flow rates will be the same only if the reactor is operating near rated power.

C. The main steam mass flow rate is smaller than the main feedwater mass flow rate by the amount of moisture removed by the steam generator moisture separators.

D. The main steam mass flow rate is greater than the main feedwater mass flow rate by the amount of moisture removed by the steam generator moisture separators.

ANSWER: A.

TOPIC: 193006
KNOWLEDGE: K1.05 [2.9/3.0]
QID: P5342 (B5342)

A heat exchanger has the following initial cooling water inlet temperature and differential pressure (ΔP) parameters:

Inlet Temperature = 70°F
Heat Exchanger ΔP = 10 psi

Six hours later, the current heat exchanger cooling water parameters are:

Inlet Temperature = 85°F
Heat Exchanger ΔP = 10 psi

In comparison to the initial cooling water mass flow rate, the current mass flow rate is...

A. lower, because the density of the cooling water has decreased.

B. higher, because the velocity of the cooling water has increased.

C. the same, because the changes in cooling water velocity and density offset.

D. the same, because the heat exchanger cooling water ΔP is the same.

ANSWER: A.

TOPIC: 193006
KNOWLEDGE: K1.05 [2.9/3.0]
QID: P7342 (B7342)

An 80 gpm leak to atmosphere has developed from a cooling water system that is operating at 150 psig. Which one of the following will be the approximate leak rate when system pressure has decreased to 100 psig?

A. 70 gpm

B. 65 gpm

C. 53 gpm

D. 47 gpm

ANSWER: B.

TOPIC: 193006
KNOWLEDGE: K1.06 [2.8/2.9]
QID: P580

Reactor coolant system (RCS) hot leg temperature is constant at 568°F while RCS pressure is decreasing due to a small reactor coolant leak. Which one of the following RCS pressure ranges includes the pressure at which two-phase flow will first occur in the hot leg?

A. 1,250 to 1,201 psig

B. 1,200 to 1,151 psig

C. 1,150 to 1,101 psig

D. 1,100 to 1,051 psig

ANSWER: B.

TOPIC: 193006
KNOWLEDGE: K1.06 [2.8/2.9]
QID: P1180

Reactor coolant system (RCS) hot leg temperature is constant at 538°F while RCS pressure is decreasing due to a small reactor coolant leak. Which one of the following RCS pressure ranges includes the pressure at which two-phase flow will first occur in the hot leg?

A. 1,100 to 1,151 psig

B. 1,050 to 1,001 psig

C. 1,000 to 951 psig

D. 950 to 901 psig

ANSWER: D.

TOPIC: 193006
KNOWLEDGE: K1.06 [2.8/2.9]
QID: P1480

Reactor coolant system (RCS) hot leg temperature is constant at 520°F while RCS pressure is decreasing due to a small reactor coolant leak. Which one of the following pressure ranges includes the pressure at which two-phase flow will first occur in the hot leg?

A. 950 to 901 psig

B. 900 to 851 psig

C. 850 to 801 psig

D. 800 to 751 psig

ANSWER: D.

TOPIC: 193006
KNOWLEDGE: K1.06 [2.8/2.9]
QID: P2581

Reactor coolant system (RCS) hot leg temperature is constant at 552°F while RCS pressure is decreasing due to a small reactor coolant leak. Which one of the following pressure ranges includes the pressure at which two-phase flow will first occur in the hot leg?

A. 1,100 to 1,051 psig

B. 1,050 to 1,001 psig

C. 1,000 to 951 psig

D. 950 to 901 psig

ANSWER: B.

TOPIC: 193006
KNOWLEDGE: K1.06 [2.8/2.9]
QID: P7649 (B7649)

If the quality of a flowing steam-water mixture is known, what additional information, if any, is needed to determine the percent moisture content of the steam-water mixture?

A. The mass flow rate of the mixture.

B. The specific volume of the mixture.

C. The pressure and/or temperature of the mixture.

D. No additional information is needed.

ANSWER: D.

TOPIC: 193006
KNOWLEDGE: K1.06 [2.8/2.9]
QID: P7689

A nuclear power plant is initially operating at steady-state 100 percent power. If an unplanned load rejection causes the main generator load to rapidly decrease to 90 percent, the voids in the two-phase flow in the steam generator tube bundle region will initially _____; which causes indicated steam generator water level (measured in the downcomer) to initially _____.

A. shrink; decrease

B. shrink; increase

C. expand; decrease

D. expand; increase

ANSWER: A.

TOPIC: 193006
KNOWLEDGE: K1.07 [2.7/2.7]
QID: P581

A nuclear power plant is recovering from a loss of offsite power that caused all reactor coolant pumps (RCPs) to stop. Pressurizer level indication is off-scale high.

Which one of the following is most likely to occur if the steam generator (SG) temperatures are 50°F higher than their associated reactor coolant system (RCS) loop temperatures when an RCP is restarted?

A. Localized water hammer in the RCS.

B. Pressurized thermal shock to the SGs.

C. A large pressure spike throughout the RCS.

D. Inadvertent lifting of a SG atmospheric relief valve.

ANSWER: C.

TOPIC: 193006
KNOWLEDGE: K1.08 [2.8/1.8]
QID: P279 (B143)

A centrifugal water pump was returned to service after maintenance. However, the operator failed to vent the pump.

Compared to normal pump operating conditions, after the pump is started the operator will see a _____ flow rate and a _____ discharge head.

A. higher; lower

B. higher; higher

C. lower; lower

D. lower; higher

ANSWER: C.

TOPIC: 193006
KNOWLEDGE: K1.08 [2.8/2.8]
QID: P3481

Refer to the drawing of a cooling water system (see figure below).

Centrifugal pump A is circulating water at 100°F. Which one of the following will cause the centrifugal pump to operate closer to a condition in which gas/vapor binding can occur?

A. Surge tank level is raised by 5 percent.

B. Service water flow rate is decreased by 5 percent.

C. The pump discharge valve is repositioned to decrease cooling water system flow rate by 5 percent.

D. Makeup water containing a high concentration of total dissolved solids is added to the cooling water system.

ANSWER: B.

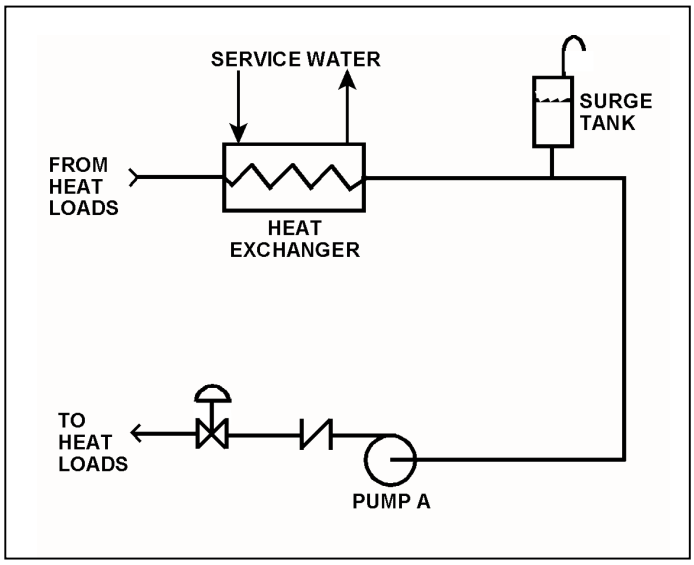

TOPIC: 193006
KNOWLEDGE: K1.10 [3.3/3.4]
QID: P80 (B79)

If a valve closure suddenly stops fluid flow, the resulting piping system pressure transient is referred to as...

A. cavitation.

B. shutoff head.

C. water hammer.

D. valve chatter.

ANSWER: C.

TOPIC: 193006
KNOWLEDGE: K1.10 [3.3/3.4]
QID: P381 (B380)

The major concern with starting a main feedwater pump with downstream fluid in a saturated condition is...

A. cavitation.

B. water hammer.

C. thermal shock.

D. positive reactivity addition.

ANSWER: B.

TOPIC: 193006
KNOWLEDGE: K1.10 [3.3/3.4]
QID: P2480 (B1180)

Which one of the following will increase the possibility of water hammer?

A. Opening and closing system valves very slowly.

B. Venting liquid systems only after initiating system flow.

C. Starting centrifugal pumps with the discharge valve closed.

D. Starting positive displacement pumps with the discharge valve open.

ANSWER: B.

TOPIC: 193006
KNOWLEDGE: K1.10 [3.3/3.4]
QID: P2880

The primary reason for slowly opening the discharge valve of a large motor-driven centrifugal cooling water pump after starting the pump is to minimize the...

A. net positive suction head requirements.

B. potential for a water hammer.

C. motor running current requirements.

D. potential for pump cavitation.

ANSWER: B.

TOPIC: 193006
KNOWLEDGE: K1.11 [3.1/3.3]
QID: P79

Cavitation in an operating pump can be caused by...

A. lowering the pump suction temperature.

B. throttling the pump suction valve.

C. increasing the pump backpressure.

D. increasing the pump suction pressure.

ANSWER: B.

TOPIC: 193006
KNOWLEDGE: K1.11 [3.1/3.3]
QID: P149

Cavitation of a centrifugal pump in an open system is indicated by _____ discharge pressure and _____ flow rate.

A. low; low

B. high; high

C. low; high

D. high; low

ANSWER: A.

TOPIC: 193006
KNOWLEDGE: K1.11 [3.1/3.3]
QID: P382 (B80)

Which one of the following is most likely to cause cavitation in an operating centrifugal pump?

A. Lowering the suction temperature.

B. Throttling the pump suction valve.

C. Throttling the pump discharge valve.

D. Decreasing the pump speed.

ANSWER: B.

TOPIC: 193006
KNOWLEDGE: K1.11 [3.1/3.3]
QID: P481

While on surveillance rounds, an operator notices that a centrifugal pump is making a great deal of noise (like marbles rattling inside the pump casing) and the pump discharge pressure is fluctuating.

This set of conditions indicates that the pump is experiencing...

A. runout.

B. cavitation.

C. bearing deterioration.

D. packing deterioration.

ANSWER: B.

TOPIC: 193006
KNOWLEDGE: K1.11 [3.1/3.3]
QID: P1181

Indications of pump cavitation include abnormally _____ pump discharge pressure and abnormally _____ pump flow rate.

A. low; low

B. low; high

C. high; low

D. high; high

ANSWER: A.

TOPIC: 193006
KNOWLEDGE: K1.11 [3.1/3.3]
QID: P1381

Cavitation is the formation of vapor bubbles in the _____ of a pump with the subsequent collapse of these bubbles in the pump _____.

A. impeller; casing

B. impeller; discharge piping

C. volute; casing

D. volute; discharge piping

ANSWER: A.

TOPIC: 193006
KNOWLEDGE: K1.11 [3.1/3.3]
QID: P2680 (B280)

Cavitation is the formation of vapor bubbles in the _____ pressure area of a pump followed by the _____ of these bubbles within the pump casing.

A. low; expansion

B. low; collapse

C. high; expansion

D. high; collapse

ANSWER: B.

TOPIC: 193006
KNOWLEDGE: K1.11 [3.1/3.3]
QID: P2981 (B1880)

Pump cavitation occurs when vapor bubbles are formed at the eye of a pump impeller...

A. because the localized flow velocity exceeds sonic velocity for the existing fluid temperature.

B. because the localized pressure exceeds the vapor pressure for the existing fluid temperature.

C. and enter a high pressure region of the pump where they collapse causing damaging pressure pulsations.

D. and are discharged from the pump where they expand into larger bubbles causing damaging pressure pulsations.

ANSWER: C.

TOPIC: 193006
KNOWLEDGE: K1.12 [2.5/2.6]
QID: P81

In an operating cooling water system with a constant water velocity, if water temperature decreases, system volumetric flow rate (gpm) will...

A. remain the same, because the density of the water has not changed.

B. increase, because the density of the water has increased.

C. remain the same, because the water velocity has not changed.

D. increase, because the viscosity of the water has increased.

ANSWER: C.

TOPIC: 193006
KNOWLEDGE: K1.12 [2.5/2.6]
QID: P281

Flow instruments that measure the mass flow rate of steam often have a density compensation feature because, for a steam pressure increase at a constant volumetric flow rate, steam density will _____ and the actual mass flow rate will _____.

A. decrease; increase

B. increase; decrease

C. increase; increase

D. decrease; decrease

ANSWER: C.

TOPIC: 193006
KNOWLEDGE: K1.12 [2.5/2.6]
QID: P982

A density-compensated flow instrument is being used to measure mass flow rate in a steam system. If the pressure of the steam decreases, indicated mass flow rate will: (Assume volumetric flow rate is constant.)

A. increase for all steam conditions.

B. decrease for all steam conditions.

C. increase, but only if the steam is saturated (not superheated).

D. decrease, but only if the steam is saturated (not superheated).

ANSWER: B.

TOPIC: 193006
KNOWLEDGE: K1.12 [2.5/2.6]
QID: P1083

A steam generator transient causes main steam pressure to decrease although the actual steam mass flow rate to the main turbine remains constant. If the main steam flow instrument is not density compensated, indicated steam mass flow rate will...

A. increase, due to the increased velocity of the steam.

B. increase, due to the increased density of the steam.

C. decrease, due to the decreased velocity of the steam.

D. decrease, due to the decreased density of the steam.

ANSWER: A.

TOPIC: 193006
KNOWLEDGE: K1.12 [2.5/2.6]
QID: P1182

A cooling water system is supplying 1.0 x 10^6 lbm/hour of flow at 100°F. Assuming volumetric flow rate does not change, which one of the following will be the mass flow rate in the system if cooling water temperature increases to 140°F?

A. 7.5 x 10^5 lbm/hr

B. 8.3 x 10^5 lbm/hr

C. 9.0 x 10^5 lbm/hr

D. 9.9 x 10^5 lbm/hr

ANSWER: D.

TOPIC: 193006
KNOWLEDGE: K1.12 [2.5/2.6]
QID: P1780

A reactor coolant system is supplying 1.0 x 10^8 lbm/hour of coolant flow at a temperature of 100°F. Assuming volumetric flow rate does not change, which one of the following is the approximate mass flow rate that will be supplied by the system if cooling water temperature increases to 400°F?

A. 1.2 x 10^8 lbm/hr

B. 1.1 x 10^8 lbm/hr

C. 9.2 x 10^7 lbm/hr

D. 8.7 x 10^7 lbm/hr

ANSWER: D.

TOPIC: 193006
KNOWLEDGE: K1.12 [2.5/2.6]
QID: P2182

A reactor coolant system is supplying 1.0 x 10^8 lbm/hr of coolant flow at a temperature of 100°F. Assuming volumetric flow rate does not change, which one of the following is the approximate mass flow rate that will be supplied by the system if coolant temperature increases to 500°F?

A. 1.2 x 10^8 lbm/hr

B. 1.1 x 10^8 lbm/hr

C. 8.7 x 10^7 lbm/hr

D. 7.9 x 10^7 lbm/hr

ANSWER: D.

TOPIC: 193006
KNOWLEDGE: K1.12 [2.5/2.6]
QID: P2681

A cooling water system is supplying 2,000 lbm/min coolant flow at a temperature of 100°F. Assuming volumetric flow rate does not change, which one of the following is the approximate mass flow rate that will be supplied by the system if cooling water temperature increases to 140°F?

A. 1,964 lbm/min

B. 1,980 lbm/min

C. 2,020 lbm/min

D. 2,036 lbm/min

ANSWER: B.

TOPIC: 193006
KNOWLEDGE: K1.12 [2.5/2.6]
QID: P2882

A steam generator transient causes main steam pressure to increase although the actual mass flow rate of steam remains constant. If the main steam flow instrument is not density compensated, the increased main steam pressure will cause indicated steam mass flow rate to...

A. increase, due to a higher steam velocity.

B. increase, due to a greater steam density.

C. decrease, due to a lower steam velocity.

D. decrease, due to a reduced steam density.

ANSWER: C.

TOPIC: 193006
KNOWLEDGE: K1.12 [2.5/2.6]
QID: P3081 (B3032)

The volumetric flow rate of cooling water entering a heat exchanger is 500 gpm.

Given the following:

- Cooling water pressure entering and leaving the heat exchanger is 10 psig.
- Cooling water inlet temperature is 90°F.
- Cooling water outlet temperature is 160°F.
- Heat exchanger inlet and outlet piping have the same diameter.

What is the approximate volumetric flow rate of the cooling water exiting the heat exchanger?

A. 496 gpm

B. 500 gpm

C. 504 gpm

D. 509 gpm

ANSWER: D.

TOPIC: 193006
KNOWLEDGE: K1.12 [2.5/2.6]
QID: P3783 (B3733)

A condensate pump is taking suction on a main condenser hotwell, containing water at 100°F, and discharging the water at a volumetric flow rate of 100,000 gpm to the main feedwater system. The main feedwater system heats the water to 400°F before it enters the steam generators. Assume there is no leakage, and no bypass or recirculation flow paths are in use.

What is the approximate volumetric flow rate of the feedwater entering the steam generators?

A. 100,000 gpm

B. 105,000 gpm

C. 109,000 gpm

D. 115,000 gpm

ANSWER: D.

TOPIC: 193006
KNOWLEDGE: K1.15 [3.1/3.3]
QID: P147

Operating two pumps in parallel instead of operating a single pump will result in a...

A. large increase in pump head and a small increase in pump flow rate.

B. small increase in pump head and a small increase in pump flow rate.

C. small increase in pump head and a large increase in pump flow rate.

D. large increase in pump head and a large increase in pump flow rate.

ANSWER: C.

TOPIC: 193006
KNOWLEDGE: K1.15 [3.1/3.3]
QID: P280

The major effect of starting a second centrifugal pump in parallel with an operating centrifugal pump in an open system is increased...

A. system pressure.

B. system flow rate.

C. pump discharge pressure.

D. pump flow rate.

ANSWER: B.

TOPIC: 193006
KNOWLEDGE: K1.15 [3.1/3.3]
QID: P282

To decrease the flow rate through an operating positive displacement pump, an operator should...

A. throttle the pump discharge valve partially closed.

B. throttle the pump suction valve partially closed.

C. decrease the pump's available net positive suction head.

D. decrease the pump's speed.

ANSWER: D.

TOPIC: 193006
KNOWLEDGE: K1.15 [3.1/3.3]
QID: P981

Which one of the following will decrease the head loss occurring in an operating cooling water system?

A. Starting a second pump in parallel with the operating pump.

B. Shifting two heat exchangers from parallel to series operation.

C. Replacing a 10 foot section of 10-inch diameter pipe with a 20 foot section of 10-inch diameter pipe.

D. Replacing a 20 foot section of 10-inch diameter pipe with a 20 foot section of 12-inch diameter pipe.

ANSWER: D.

TOPIC: 193006
KNOWLEDGE: K1.15 [3.1/3.3]
QID: P1282

Two centrifugal pumps and two positive displacement pumps are able to be cross-connected to provide makeup water flow to a system. Each pump will produce 100 gpm at a system pressure of 1,000 psig.

If system pressure is 1,200 psig, which one of the following combinations will produce the greatest flow rate to the system?

A. Two positive displacement pumps in series

B. Two positive displacement pumps in parallel

C. Two centrifugal pumps in series

D. Two centrifugal pumps in parallel

ANSWER: B.

TOPIC: 193006
KNOWLEDGE: K1.15 [3.1/3.3]
QID: P1683

Two centrifugal pumps and two positive displacement pumps are able to be cross-connected to provide makeup water flow to a system. Each pump will produce 100 gpm at a system pressure of 1,000 psig backpressure.

If system pressure is 800 psig, which one of the following combinations will produce the greatest flow rate to the system?

A. Two centrifugal pumps in parallel.

B. Two centrifugal pumps in series.

C. Two positive displacement pumps in parallel.

D. Two positive displacement pumps in series.

ANSWER: A.

TOPIC: 193006
KNOWLEDGE: K1.15 [3.1/3.3]
QID: P1784 (B1725)

Two identical centrifugal pumps (CPs) and two identical positive displacement pumps (PDPs) are able to take suction on a vented water storage tank and provide makeup water flow to a cooling water system. The pumps are capable of being cross-connected to provide multiple configurations. In single pump alignment, each pump will supply 100 gpm at a system pressure of 1,000 psig.

Given the following information:

Centrifugal Pumps

Shutoff head = 1,500 psig
Maximum design pressure = 2,000 psig
Flow rate with no backpressure = 180 gpm

Positive Displacement Pumps

Maximum design pressure = 2,000 psig

Which one of the following pump configurations will supply the lowest makeup water flow rate to the system if system pressure is 1,700 psig?

A. Two CPs in series

B. Two CPs in parallel

C. One PDP and one CP in series (CP supplying PDP)

D. One PDP and one CP in parallel

ANSWER: B.

TOPIC: 193006
KNOWLEDGE: K1.15 [3.1/3.3]
QID: P1979

Two identical centrifugal pumps (CPs) and two identical positive displacement pumps (PDPs) are able to take suction on a vented water storage tank and provide makeup water flow to a cooling water system. The pumps are capable of being cross-connected to provide multiple configurations. In single pump alignment, each pump will supply 100 gpm at a system pressure of 1,000 psig.

Given the following information:

Centrifugal Pumps

Shutoff head	=	1,500 psig
Maximum design pressure	=	2,000 psig
Flow rate with no backpressure	=	180 gpm

Positive Displacement Pumps

Maximum design pressure	=	2,000 psig

Which one of the following pump configurations will supply the highest makeup flow rate to the system if system pressure is 800 psig?

A. One PDP and one CP in series (CP supplying PDP)

B. One PDP and one CP in parallel

C. Two CPs in series

D. Two CPs in parallel

ANSWER: D.

TOPIC: 193006
KNOWLEDGE: K1.15 [3.1/3.3]
QID: P2282 (B2281)

Water at 90°F and 50 psig is flowing through a 10-inch diameter pipe at 100 lbm/sec. The pipe then splits into two pipes, a 4-inch diameter pipe and an 8-inch diameter pipe.

Disregarding any flow restrictions other than pipe size, which one of the following lists the approximate flow rates through the 4-inch and 8-inch diameter pipes? (Assume that water velocity is the same in each pipe.)

	4-inch Pipe (lbm/sec)	8-inch Pipe (lbm/sec)
A.	20	80
B.	25	75
C.	30	70
D.	33	67

ANSWER: A.

TOPIC: 193006
KNOWLEDGE: K1.15 [3.1/3.3]
QID: P2383 (B2324)

Two identical centrifugal pumps (CPs) and two identical positive displacement pumps (PDPs) are able to take suction on a vented water storage tank and provide makeup water flow to a cooling water system. The pumps are capable of being cross-connected to provide multiple configurations. In single pump alignment, each pump will supply 100 gpm at a system pressure of 1,200 psig.

Given the following information:

Centrifugal Pumps

Shutoff head = 1,500 psig
Maximum design pressure = 2,000 psig
Flow rate with no backpressure = 180 gpm

Positive Displacement Pumps

Maximum design pressure = 2,000 psig

Which one of the following pump configurations will supply the highest makeup flow rate to the system if system pressure is 500 psig?

A. Two CPs in series

B. Two CPs in parallel

C. Two PDPs in parallel

D. One CP and one PDP in series (CP supplying PDP)

ANSWER: B.

TOPIC: 193006
KNOWLEDGE: K1.15 [3.1/3.3]
QID: P2481 (B2479)

Water at 90°F and 50 psig is flowing through a 10-inch diameter pipe at 100 lbm/sec. The pipe then splits into two pipes, a 3-inch diameter pipe and a 6-inch diameter pipe.

Disregarding any flow restrictions other than pipe size, which one of the following lists the approximate flow rates through the 3-inch and 6-inch diameter pipes. (Assume that water velocity is the same in each pipe.)

	3-inch Pipe (lbm/sec)	6-inch Pipe (lbm/sec)
A.	10	90
B.	20	80
C.	25	75
D.	33	67

ANSWER: B.

TOPIC: 193006
KNOWLEDGE: K1.15 [3.1/3.3]
QID: P2582 (B2581)

Water at 90°F and 50 psig is flowing through a 10-inch diameter pipe at 100 lbm/sec. The pipe then splits into two pipes, a 6-inch diameter pipe and an 8-inch diameter pipe.

Disregarding any flow restrictions other than pipe size, which one of the following lists the approximate flow rates through the 6-inch and 8-inch diameter pipes? (Assume that water velocity is the same in each pipe.)

	6-inch Pipe (lbm/sec)	8-inch Pipe (lbm/sec)
A.	24	76
B.	32	68
C.	36	64
D.	40	60

ANSWER: C.

TOPIC: 193006
KNOWLEDGE: K1.15 [3.1/3.3]
QID: P2783 (B2723)

Two identical centrifugal pumps (CPs) and two identical positive displacement pumps (PDPs) are able to take suction on a vented water storage tank and provide makeup water flow to a cooling water system. The pumps are capable of being cross-connected to provide multiple configurations. In single pump alignment, each pump will supply 100 gpm at a system pressure of 1,200 psig.

Given the following information:

Centrifugal Pumps

Shutoff head = 1,500 psig
Maximum design pressure = 2,000 psig
Flow rate with no backpressure = 180 gpm

Positive Displacement Pumps

Maximum design pressure = 2,000 psig

Which one of the following pump configurations will supply the highest makeup flow rate to the cooling water system if system pressure is 1,700 psig?

A. Two CPs in series

B. Two CPs in parallel

C. Two PDPs in parallel

D. One CP and one PDP in series (CP supplying PDP)

ANSWER: C.

TOPIC: 193006
KNOWLEDGE: K1.15 [3.1/3.3]
QID: P3183

A four-loop PWR nuclear power plant uses four identical reactor coolant pumps (RCPs) to supply reactor coolant flow through the reactor vessel. The plant is currently operating at 20 percent power with all RCPs in operation.

Which one of the following describes the stable RCS flow rate through the reactor vessel following the trip of one RCP? (Assume that no operator actions are taken and the reactor does not trip.)

A. Less than 75 percent of the original flow rate.

B. Exactly 75 percent of the original flow rate.

C. Greater than 75 percent of the original flow rate.

D. Unpredictable without pump curves for the RCPs.

ANSWER: C.

TOPIC: 193006
KNOWLEDGE: K1.15 [3.1/3.3]
QID: P3582

A reactor shutdown has been performed because of leakage from the reactor coolant system (RCS) to a steam generator (SG) via a tube leak.

Given the following current conditions:

- SG pressure is 1,000 psia.
- RCS pressure is 2,200 psia.
- RCS average temperature is 500°F.
- Leak rate from the RCS to the SG is 100 gpm.

If RCS pressure is decreased to 1,600 psia, with no other changes in plant parameters, what will be the approximate leak rate from the RCS to the SG?

A. 50 gpm

B. 71 gpm

C. 79 gpm

D. 85 gpm

ANSWER: B.

TOPIC: 193006
KNOWLEDGE: K1.15 [3.1/3.3]
QID: P3683 (B3681)

Two identical single-speed centrifugal pumps (CPs) and two identical single-speed positive displacement pumps (PDPs) are able to take suction on a vented water storage tank and provide makeup water flow to a cooling water system. The pumps are capable of being cross-connected to provide multiple configurations. In single pump alignment, each pump will supply 100 gpm at a system pressure of 1,200 psig.

Given the following information:

Centrifugal Pumps

Discharge pressure at shutoff head = 1,500 psig
Maximum design pressure = 2,000 psig
Flow rate with no backpressure = 180 gpm

Positive Displacement Pumps

Maximum design pressure = 2,000 psig

Which one of the following pump configurations will supply the highest initial flow rate to a cooling water system that is drained and depressurized?

A. Two CPs in series

B. Two CPs in parallel

C. Two PDPs in parallel

D. One CP and one PDP in series (CP supplying PDP)

ANSWER: B.

TOPIC: 193006
KNOWLEDGE: K1.15 [3.1/3.3]
QID: P4243 (B4242)

Refer to the drawing of a venturi in a main steam line (see figure below). The venturi inlet and outlet pipe diameters are equal.

A main steam line break downstream of the venturi causes the main steam mass flow rate through the venturi to increase. Soon, the steam reaches sonic velocity in the throat of the venturi.

How will the main steam mass flow rate through the venturi be affected as the steam pressure downstream of the venturi continues to decrease?

A. It will continue to increase at a rate that is dependent on the steam velocity in the throat of the venturi.

B. It will continue to increase at a rate that is dependent on the differential pressure (P1 - P2) across the venturi.

C. It will <u>not</u> continue to increase because the steam velocity <u>cannot</u> increase above sonic velocity in the throat of the venturi.

D. It will <u>not</u> continue to increase because the differential pressure (P1 - P2) across the venturi <u>cannot</u> increase further once the steam reaches sonic velocity in the throat of the venturi.

ANSWER: C.

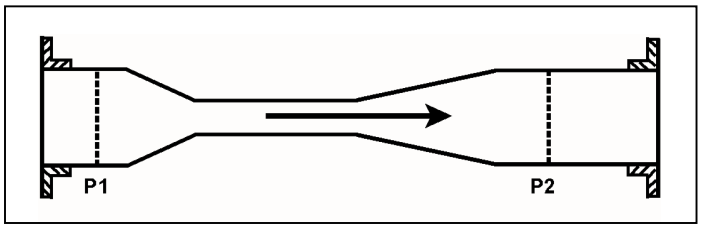

TOPIC: 193006
KNOWLEDGE: K1.15 [3.1/3.3]
QID: P4343 (B4342)

Two identical single-speed centrifugal pumps (CPs) and two identical single-speed positive displacement pumps (PDPs) are able to take suction on a vented water storage tank and provide makeup water flow to a cooling water system. The pumps are capable of being cross-connected to provide multiple configurations. In single pump alignment, each pump will supply 100 gpm at a system pressure of 1,200 psig.

Given the following information:

Centrifugal Pumps

Discharge pressure at shutoff head = 1,500 psig
Maximum design pressure = 2,000 psig
Flow rate with no backpressure = 180 gpm

Positive Displacement Pumps

Maximum design pressure = 2,000 psig

Which one of the following pump configurations will supply the lowest initial flow rate of makeup water to a cooling water system that is drained and depressurized?

A. Two CPs in series

B. Two CPs in parallel

C. Two PDPs in parallel

D. One CP and one PDP in series (CP supplying PDP)

ANSWER: D.

TOPIC: 193006
KNOWLEDGE: K1.15 [3.1/3.3]
QID: P4543 (B4542)

Refer to the drawing of a main water header that splits into two parallel headers (see figure below).

Header A has a 2-inch diameter and header B has a 3-inch diameter. The velocity of the water in both headers is the same.

If the main water header has a flow rate of 500 gpm, what is the approximate flow rate in each of the parallel headers?

	Header A (gpm)	Header B (gpm)
A.	125	375
B.	154	346
C.	200	300
D.	222	278

ANSWER: B.

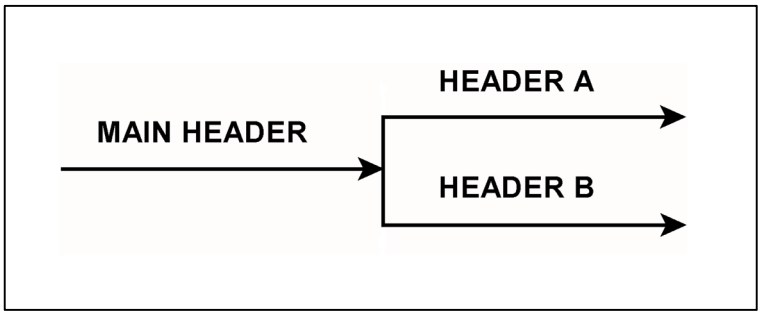

TOPIC: 193006
KNOWLEDGE: K1.15 [3.1/3.3]
QID: P4643 (B4642)

A length of pipe in a cooling water system uses a reducer fitting to decrease the pipe diameter from 6 inches to 4 inches. The flow rate in the 6-inch diameter section of pipe is 200 gpm. What is the flow rate in the 4-inch diameter section of pipe?

A. 133 gpm

B. 200 gpm

C. 300 gpm

D. 450 gpm

ANSWER: B.

TOPIC: 193006
KNOWLEDGE: K1.15 [3.1/3.3]
QID: P4743

A four-loop PWR nuclear power plant uses four identical single-speed reactor coolant pumps (RCPs) to supply reactor coolant flow through the reactor vessel. The plant is currently shut down with one RCP in operation.

Which one of the following describes the stable reactor coolant flow rate through the reactor vessel following the start of a second RCP?

A. Less than twice the original flow rate.

B. Exactly twice the original flow rate.

C. More than twice the original flow rate.

D. Cannot be determined without additional information.

ANSWER: A.

TOPIC: 193006
KNOWLEDGE: K1.15 [3.1/3.3]
QID: P5543 (B5542)

A vented water storage tank contains 60 feet of water at 70°F. A cracked weld at the bottom of the tank results in a leak rate of 12 gpm. If makeup water flow rate is 5 gpm, at what water level will the tank stabilize?

A. 38.7 feet

B. 25.0 feet

C. 10.4 feet

D. 0.0 feet

ANSWER: C.

TOPIC: 193006
KNOWLEDGE: K1.15 [3.1/3.3]
QID: P5943 (B5942)

A vented water storage tank contains 64 feet of water at 70°F. A cracked weld at the bottom of the tank results in a leak rate of 12 gpm. At what water level will the leak rate be 3 gpm?

A. 48 feet

B. 32 feet

C. 16 feet

D. 4 feet

ANSWER: D.

TOPIC: 193006
KNOWLEDGE: K1.15 [3.1/3.3]
QID: P6143 (B6142)

A plant shutdown will be performed because of leakage from the main condenser cooling water system into the main condenser via a tube leak.

Given the following initial conditions:

- Main condenser pressure is 1.7 psia.
- Atmospheric pressure is 14.7 psia
- Main condenser cooling water pressure at the location of the tube leak is 18 psig.
- Cooling water leak rate into the main condenser is 80 gpm.

If the main condenser is brought to atmospheric pressure, with no changes to the main condenser cooling water system parameters, what will be the approximate rate of cooling water leakage into the main condenser?

A. 36 gpm

B. 52 gpm

C. 61 gpm

D. 72 gpm

ANSWER: C.

TOPIC: 193006
KNOWLEDGE: K1.15 [3.1/3.3]
QID: P6543 (B6542)

An ideal positive displacement pump is operating in an open system with the following initial parameters:

Suction pressure = 10 psig
Discharge pressure = 25 psig
Flow rate = 100 gpm

If the pump discharge pressure increases to 40 psig, the pump flow rate will...

A. remain constant.

B. decrease in direct proportion to the change in pump differential pressure.

C. decrease in direct proportion to the square of the change in pump differential pressure.

D. decrease in direct proportion to the square root of the change in pump differential pressure.

ANSWER: A.

TOPIC: 193006
KNOWLEDGE: K1.15 [3.1/3.3]
QID: P6743 (B6742)

A centrifugal pump is operating at a constant speed in a closed system with the following initial parameters:

Suction pressure = 10 psig
Discharge pressure = 25 psig
Pump flow rate = 500 gpm

If the pump discharge flow control valve is throttled such that the pump discharge pressure increases to 40 psig, the change in pump flow rate will be...

A. directly proportional to the square of the change in pump differential pressure.

B. directly proportional to the square root of the change in pump differential pressure.

C. inversely proportional to the square root of the change in pump differential pressure.

D. impossible to determine from the provided information.

ANSWER: D.

TOPIC: 193006
KNOWLEDGE: K1.15 [3.1/3.3]
QID: P6843 (B6842)

Refer to the drawing of a venturi in a steam line (see figure below). The venturi inlet and outlet pipe diameters at P1 and P2 are equal.

Currently, steam is flowing through the venturi, reaching sonic velocity in the throat of the venturi. If the steam inlet pressure (P1) remains constant while the downstream pressure (P2) decreases, the mass flow rate of the steam will _____; and the velocity of the steam at the venturi outlet will _____.

A. increase; increase

B. increase; remain the same

C. remain the same; increase

D. remain the same; remain the same

ANSWER: C.

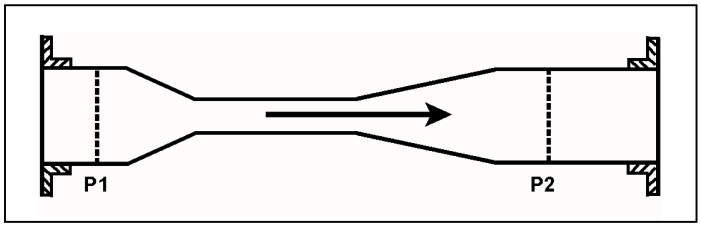

TOPIC: 193006
KNOWLEDGE: K1.15 [3.1/3.3]
QID: P7143

The following are current parameter values for an operating PWR nuclear power plant:

Steam generator (SG) pressure = 1,000 psia
Main feed pump (MFP) discharge pressure = 1,220 psia

If SG pressure does not change, what MFP discharge pressure will increase main feedwater mass flow rate by 10 percent? (Assume MFP inlet temperature remains the same. Also, assume all valves/components that contribute to head loss downstream of the MFP remain in their current configuration.)

A. 1,242 psia

B. 1,266 psia

C. 1,293 psia

D. 1,342 psia

ANSWER: B.

TOPIC: 193006
KNOWLEDGE: K1.15 [3.1/3.3]
QID: P7543 (B7542)

Which one of the following will increase the head loss occurring in an operating cooling water system?

A. Shifting two heat exchangers from parallel to series operation.

B. Increasing the flow rate in the system by throttling open a flow control valve.

C. Replacing a 20 foot section of 10-inch diameter pipe with a 10 foot section of 10-inch diameter pipe.

D. Replacing a 20 foot section of 10-inch diameter pipe with a 20 foot section of 12-inch diameter pipe.

ANSWER: A.

TOPIC: 193006
KNOWLEDGE: K1.15 [3.1/3.3]
QID: P7660 (B7660)

Which one of the following will decrease the head loss occurring in an operating cooling water system?

A. Shifting two heat exchangers from parallel to series operation.

B. Increasing the flow rate in the system by positioning a flow control valve more open.

C. Replacing a 10 foot length of 10-inch diameter pipe with a 20 foot length of 10-inch diameter pipe.

D. Replacing a 20 foot length of 12-inch diameter pipe with a 20 foot length of 10-inch diameter pipe.

ANSWER: B.

TOPIC: 193006
KNOWLEDGE: K1.15 [3.1/3.3]
QID: P7669 (B7669)

Refer to the drawing of a main water header that splits into two parallel headers (see figure below).

Header A has a 2-inch diameter and header B has a 4-inch diameter. The velocity of the water in both headers is the same.

If the main water header has a flow rate of 500 gpm, what is the approximate flow rate in each of the parallel headers?

	Header A (gpm)	Header B (gpm)
A.	100	400
B.	125	375
C.	167	333
D.	200	300

ANSWER: A.

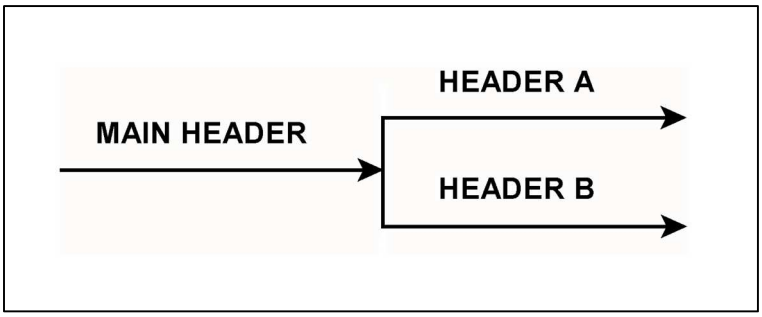

TOPIC: 193006
KNOWLEDGE: K1.15 [3.1/3.3]
QID: P7710 (B7710)

A vented water storage tank contains 30 feet of water at 70°F. A cracked weld at the bottom of the tank causes an initial leak rate of 12 gpm. If makeup water flow rate is 8 gpm, at what water level will the tank stabilize?

A. 24.5 feet

B. 20.0 feet

C. 13.3 feet

D. 0.0 feet

ANSWER: C.

TOPIC: 193007
KNOWLEDGE: K1.01 [2.5/2.5]
QID: P283

The transfer of heat from the reactor fuel pellets to the fuel cladding during normal plant operation is primarily accomplished via _____ heat transfer.

A. conduction

B. convection

C. radiant

D. two-phase

ANSWER: A.

TOPIC: 193007
KNOWLEDGE: K1.01 [2.5/2.5]
QID: P584 (B882)

Refer to the drawing of a fuel rod and coolant flow channel at the beginning of a fuel cycle (see figure below).

Which one of the following is the primary method of heat transfer through the gap between the fuel pellets and the fuel cladding?

A. Conduction

B. Convection

C. Radiation

D. Natural circulation

ANSWER: A.

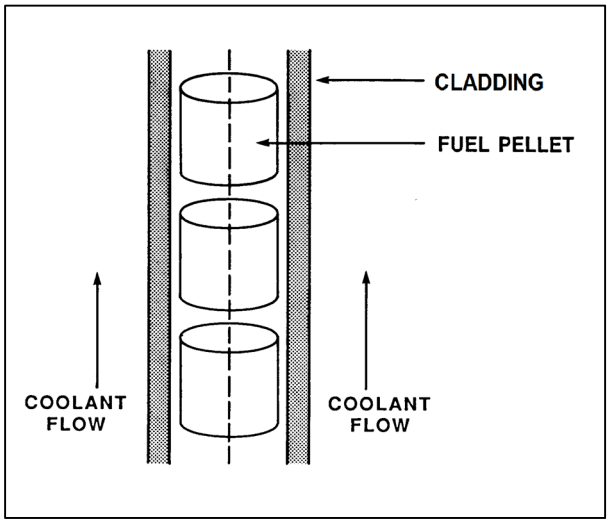

TOPIC: 193007
KNOWLEDGE: K1.01 [2.5/2.5]
QID: P784

During a loss-of-coolant accident, which one of the following heat transfer methods provides the most core cooling when fuel rods are not in contact with the coolant?

A. Radiation

B. Emission

C. Convection

D. Conduction

ANSWER: A.

TOPIC: 193007
KNOWLEDGE: K1.01 [2.5/2.5]
QID: P985 (B1982)

Reactor fuel rods are normally charged with _____ gas; which improves heat transfer by _____.

A. helium; convection

B. helium; conduction

C. nitrogen; convection

D. nitrogen; conduction

ANSWER: B.

TOPIC: 193007
KNOWLEDGE: K1.01 [2.5/2.5]
QID: P1884

A nuclear power plant is operating at 60 percent power. Which one of the following is the primary method of heat transfer from the outer surface of the steam generator tubes to the bulk feedwater?

A. Radiolysis

B. Radiation

C. Convection

D. Conduction

ANSWER: C.

TOPIC: 193007
KNOWLEDGE: K1.01 [2.5/2.5]
QID: P2284

Which one of the following describes a heat transfer process in which convection is the most significant mode of heat transfer?

A. From the fuel rods to the core barrel during core uncovery.

B. Through the tube walls in a steam generator during normal operation at 100 percent power.

C. From the fuel rods to the steam generators 24 hours after a trip of all reactor coolant pumps.

D. From the fuel pellet centerline to the fuel cladding during normal operation at 100 percent power.

ANSWER: C.

TOPIC: 193007
KNOWLEDGE: K1.01 [2.5/2.5]
QID: P2884 (B2882)

Which one of the following describes a heat transfer flow path in which conduction is the dominant mode of heat transfer?

A. From the fuel rods to the core barrel during core uncovery.

B. From the main turbine exhaust steam to the atmosphere via main condenser cooling water and a cooling tower during normal operation.

C. From the fuel rods to the steam outlet of the steam generators during a station blackout.

D. From a fuel pellet to the fuel cladding via the fuel rod fill gas during normal operation.

ANSWER: D.

TOPIC: 193007
KNOWLEDGE: K1.04 [2.8/3.0]
QID: P83

If excessive amounts of air are entrained/dissolved in the cooling water passing through a heat exchanger, the overall heat transfer coefficient of the heat exchanger will decrease because the...

A. laminar layer thickness will decrease.

B. laminar layer thickness will increase.

C. thermal conductivity of the cooling fluid will decrease.

D. thermal conductivity of the cooling fluid will increase.

ANSWER: C.

TOPIC: 193007
KNOWLEDGE: K1.04 [2.8/3.0]
QID: P1184 (B1882)

Why is bulk boiling in the tubes of a single-phase heat exchanger undesirable?

A. The bubble formation will break up the laminar layer in the heat exchanger tubes.

B. The thermal conductivity of the heat exchanger tubes will decrease.

C. The differential temperature across the tubes will decrease through the heat exchanger.

D. The turbulence will restrict fluid flow through the heat exchanger tubes.

ANSWER: D.

TOPIC: 193007
KNOWLEDGE: K1.04 [2.8/3.0]
QID: P2184 (B2184)

Which one of the following pairs of fluids undergoing heat transfer in similar cross-flow heat exchangers will yield the greatest heat exchanger overall heat transfer coefficient? (Assume comparable heat exchanger sizes and fluid flow rates.)

A. Oil to water in a lube oil cooler.

B. Air to water in an air compressor after-cooler.

C. Steam to water in a turbine exhaust steam condenser.

D. Water to water in a cooling water heat exchanger.

ANSWER: C.

TOPIC: 193007
KNOWLEDGE: K1.04 [2.8/3.0]
QID: P2384 (B2383)

Which one of the following pairs of fluids undergoing heat transfer in similar cross-flow design heat exchangers will yield the smallest heat exchanger overall heat transfer coefficient? (Assume comparable heat exchanger sizes and fluid flow rates.)

A. Oil to water in a lube oil cooler.

B. Air to water in an air compressor after-cooler.

C. Steam to water in a turbine exhaust steam condenser.

D. Water to water in a cooling water heat exchanger.

ANSWER: B.

TOPIC: 193007
KNOWLEDGE: K1.04 [2.8/3.0]
QID: P3084 (B3084)

A nuclear power plant is operating near 100 percent power. Main turbine extraction steam is being supplied to a feedwater heater. Extraction steam parameters are as follows:

Steam pressure = 414 psia
Steam flow rate = 7.5×10^5 lbm/hr
Steam enthalpy = 1,150 Btu/lbm

The extraction steam condenses to saturated water at 414 psia, and then leaves the feedwater heater via a drain line.

What is the heat transfer rate from the extraction steam to the feedwater in the feedwater heater?

A. 3.8×10^7 Btu/hr

B. 8.6×10^7 Btu/hr

C. 5.4×10^8 Btu/hr

D. 7.2×10^8 Btu/hr

ANSWER: C.

TOPIC: 193007
KNOWLEDGE: K1.04 [2.8/3.0]
QID: P3384 (B3383)

A nuclear power plant is initially operating at a steady-state power level with the following main condenser parameters:

Main condenser pressure = 1.2 psia
Cooling water inlet temperature = 60°F
Cooling water outlet temperature = 84°F

Due to increased condenser air inleakage, the overall heat transfer coefficient of the main condenser decreases by 25 percent. Main condenser heat transfer rate and cooling water temperatures are unchanged. Which one of the following is the steady-state main condenser pressure resulting from the reduced heat transfer coefficient?

A. 1.7 psia

B. 2.3 psia

C. 3.0 psia

D. 4.6 psia

ANSWER: A.

TOPIC: 193007
KNOWLEDGE: K1.04 [2.8/3.0]
QID: P3684 (B3684)

Which one of the following pairs of fluids undergoing heat transfer in similar cross-flow design heat exchangers will yield the greatest heat exchanger overall heat transfer coefficient? (Assume comparable heat exchanger sizes and fluid flow rates.)

A. Oil to water in a lube oil cooler.

B. Steam to water in a feedwater heater.

C. Water to air in a ventilation cooling unit.

D. Water to water in a cooling water heat exchanger.

ANSWER: B.

TOPIC: 193007
KNOWLEDGE: K1.04 [2.8/3.0]
QID: P5144 (B5143)

A nuclear power plant is operating near 100 percent power. Main turbine extraction steam is being supplied to a feedwater heater. Extraction steam parameters are as follows:

Steam pressure = 500 psia
Steam flow rate = 7.0×10^5 lbm/hr
Steam enthalpy = 1,135 Btu/lbm

The extraction steam condenses to saturated water at 500 psia, and then leaves the feedwater heater via a drain line.

What is the heat transfer rate from the extraction steam to the feedwater in the feedwater heater?

A. 3.2×10^8 Btu/hr

B. 4.8×10^8 Btu/hr

C. 5.3×10^8 Btu/hr

D. 7.9×10^8 Btu/hr

ANSWER: B.

TOPIC: 193007
KNOWLEDGE: K1.05 [2.7/2.9]
QID: P585

During steady state power operation, core thermal power can be most accurately determined by multiplying the total mass flow rate of the...

A. reactor coolant by the change in temperature across the core.

B. reactor coolant by the change in enthalpy in the steam generators.

C. feedwater by the change in enthalpy in the steam generators.

D. feedwater by the change in temperature across the core.

ANSWER: C.

TOPIC: 193007
KNOWLEDGE: K1.05 [2.7/2.9]
QID: P785

A reactor is producing 200 MW of core thermal power. Reactor coolant pumps are adding 10 MW of additional thermal power into the reactor coolant system based on heat balance calculations. The core is rated at 1,330 MW thermal power.

Which one of the following is the core thermal power in percent?

A. 14.0 percent

B. 14.3 percent

C. 15.0 percent

D. 15.8 percent

ANSWER: C.

TOPIC: 193007
KNOWLEDGE: K1.06 [3.1/3.3]
QID: P137

The power range nuclear instruments have been adjusted to 100 percent based on a heat balance calculation. Which one of the following would cause indicated reactor power to be greater than actual reactor power?

A. The reactor coolant pump heat input term was omitted from the heat balance calculation.

B. The feedwater flow rate used in the heat balance calculation was lower than actual feedwater flow rate.

C. The steam pressure used in the heat balance calculation was 50 psi higher than actual steam pressure.

D. The enthalpy of the feedwater was miscalculated to be 10 Btu/lbm higher than actual feedwater enthalpy.

ANSWER: A.

TOPIC: 193007
KNOWLEDGE: K1.06 [3.1/3.3]
QID: P332

Which one of the terms in the equation, $\dot{Q} = UA(T1-T2)$, is affected the most, and therefore most responsible for the initial increase in heat transfer rate from the reactor fuel during a minor (3 percent) steamline break? (Assume no initial change in reactor power.)

A. U

B. A

C. T1

D. T2

ANSWER: D.

TOPIC: 193007
KNOWLEDGE: K1.06 [3.1/3.3]
QID: P384 (B386)

The power range nuclear instruments have been adjusted to 100 percent based on a heat balance calculation. Which one of the following will result in indicated reactor power being greater than actual reactor power?

A. The feedwater temperature used in the heat balance calculation was higher than actual feedwater temperature.

B. The reactor coolant pump heat input term was omitted from the heat balance calculation.

C. The feedwater flow rate used in the heat balance calculation was lower than actual feedwater flow rate.

D. The steam pressure used in the heat balance calculation was higher than actual steam pressure.

ANSWER: B.

TOPIC: 193007
KNOWLEDGE: K1.06 [3.1/3.3]
QID: P1384

A secondary heat balance calculation is being performed at 90 percent reactor power to calibrate reactor power instrumentation. Which one of the following will result in a calculated reactor power that is less than actual reactor power?

A. Steam generator pressure is indicating 20 psi above actual steam generator pressure.

B. Steam generator water level is indicating 3 percent below actual steam generator water level.

C. Feedwater flow rate is indicating 3 percent above actual feedwater flow rate.

D. Feedwater temperature is indicating 20°F below actual feedwater temperature.

ANSWER: A.

TOPIC: 193007
KNOWLEDGE: K1.06 [3.1/3.3]
QID: P2185 (B2183)

The power range nuclear instruments have been adjusted to 100 percent based on a heat balance calculation. Which one of the following will result in indicated reactor power being lower than actual reactor power?

A. The feedwater temperature used in the heat balance calculation was 20°F higher than actual feedwater temperature.

B. The reactor coolant pump heat input term was omitted from the heat balance calculation.

C. The feedwater flow rate used in the heat balance calculation was 10 percent higher than actual feedwater flow rate.

D. The steam pressure used in the heat balance calculation was 50 psi lower than actual steam pressure.

ANSWER: A.

TOPIC: 193007
KNOWLEDGE: K1.06 [3.1/3.3]
QID: P2485 (B2684)

The power range nuclear instruments have been adjusted to 100 percent based on a heat balance calculation. Which one of the following will result in indicated reactor power being higher than actual reactor power?

A. The feedwater temperature used in the heat balance calculation was 20°F higher than actual feedwater temperature.

B. The reactor coolant pump heat input term was omitted from the heat balance calculation.

C. The feedwater flow rate used in the heat balance calculation was 10 percent lower than actual feedwater flow rate.

D. The ambient heat loss term was omitted from the heat balance calculation.

ANSWER: B.

TOPIC: 193007
KNOWLEDGE: K1.06 [3.1/3.3]
QID: P2685 (B2284)

The power range nuclear instruments have been adjusted to 100 percent based on a calculated heat balance. Which one of the following will result in indicated reactor power being lower than actual reactor power?

A. The feedwater temperature used in the heat balance calculation was 20°F higher than actual feedwater temperature.

B. The reactor coolant pump heat input value used in the heat balance was 10 percent lower than actual reactor coolant pump heat input.

C. The feedwater flow rate used in the heat balance calculation was 10 percent higher than actual feedwater flow rate.

D. The operator miscalculated the enthalpy of the steam exiting the reactor vessel to be 10 Btu/lbm higher than actual.

ANSWER: A.

TOPIC: 193007
KNOWLEDGE: K1.06 [3.1/3.3]
QID: P2885

The power range nuclear instruments have been adjusted to 100 percent based on a calculated heat balance. Which one of the following will result in indicated reactor power being lower than actual reactor power?

A. The feedwater temperature used in the heat balance calculation was 20°F lower than actual feed water temperature.

B. The reactor coolant pump heat input term was omitted from the heat balance calculation.

C. The ambient heat loss value used in the heat balance calculation was only one-half the actual ambient heat loss.

D. The feedwater flow rate used in the heat balance calculation was 10 percent higher than actual feedwater flow rate.

ANSWER: C.

TOPIC: 193007
KNOWLEDGE: K1.06 [3.1/3.3]
QID: P3944 (B1684)

The power range nuclear instruments have been adjusted to 100 percent based on a calculated heat balance. Which one of the following will result in indicated reactor power being lower than actual reactor power?

A. The feedwater temperature used in the heat balance calculation was 10°F lower than actual feedwater temperature.

B. The reactor coolant pump heat input term was omitted from the heat balance calculation.

C. The feedwater flow rate used in the heat balance calculation was 10 percent lower than actual feedwater flow rate.

D. The steam pressure used in the heat balance calculation was 50 psi lower than actual steam pressure.

ANSWER: C.

TOPIC: 193007
KNOWLEDGE: K1.06 [3.1/3.3]
QID: P5044

Two of the parameters listed below are used for calculating core thermal power using the standard heat balance method. Which one of the following identifies the two parameters?

	Reactor Coolant Mass Flow Rate	Feedwater Temperature	Steam Generator Pressure	Steam Generator Water Level
A.	Yes	No	Yes	No
B.	No	Yes	Yes	No
C.	Yes	No	No	Yes
D.	No	Yes	No	Yes

ANSWER: B.

TOPIC: 193007
KNOWLEDGE: K1.06 [3.1/3.3]
QID: P6044 (B6043)

The power range nuclear instruments have been adjusted to 100 percent based on a heat balance calculation. Which one of the following will result in indicated reactor power being higher than actual reactor power?

A. The steam pressure used in the heat balance calculation was 50 psi higher than actual steam pressure.

B. The ambient heat loss value used in the heat balance calculation was twice the actual ambient heat loss.

C. The feedwater flow rate used in the heat balance calculation was 10 percent lower than actual feedwater flow rate.

D. The feedwater temperature used in the heat balance calculation was 20°F higher than actual feedwater temperature.

ANSWER: B.

TOPIC: 193007
KNOWLEDGE: K1.06 [3.1/3.3]
QID: P6844

When performing a heat balance calculation to determine core thermal power, the measured thermal power is _____ by a value associated with the reactor coolant pumps (RCPs); the adjustment is needed because _____ of the flow energy added to the reactor coolant by the RCPs is converted to thermal energy of the reactor coolant.

A. decreased; nearly all

B. decreased; a small fraction

C. increased; nearly all

D. increased; a small fraction

ANSWER: A.

TOPIC: 193007
KNOWLEDGE: K1.08 [3.1/3.4]
QID: P84

In a two-loop PWR nuclear power plant, feedwater flow rate to each steam generator (SG) is 3.3×10^6 lbm/hr at an enthalpy of 419 Btu/lbm. The steam exiting each SG is at 800 psia with 100 percent steam quality.

Ignoring all other heat gain and loss mechanisms, what is the reactor core thermal power?

A. 677 MW

B. 755 MW

C. 1,334 MW

D. 1,510 MW

ANSWER: D.

TOPIC: 193007
KNOWLEDGE: K1.08 [3.1/3.4]
QID: P285

Reactor coolant enters a reactor core at 545°F and leaves at 595°F. The reactor coolant flow rate is 6.6×10^7 lbm/hour and the specific heat capacity of the coolant is 1.3 Btu/lbm-°F.

What is the reactor core thermal power?

A. 101 MW

B. 126 MW

C. 1,006 MW

D. 1,258 MW

ANSWER: D.

TOPIC: 193007
KNOWLEDGE: K1.08 [3.1/3.4]
QID: P485

A reactor is operating with the following parameters:

Reactor power	=	100 percent
Core ΔT	=	42°F
Reactor coolant system flow rate	=	100 percent
Average reactor coolant temperature	=	587°F

A station blackout occurs and natural circulation is established with the following stable parameters:

Decay heat rate	=	2 percent
Core ΔT	=	28°F
Average reactor coolant temperature	=	572°F

What is the core mass flow rate in percent?

A. 2.0 percent

B. 2.5 percent

C. 3.0 percent

D. 4.0 percent

ANSWER: C.

TOPIC: 193007
KNOWLEDGE: K1.08 [3.1/3.4]
QID: P685

A nuclear power plant is initially operating at 80 percent power with a core ΔT of 48°F when a station blackout occurs. Natural circulation is established and core ΔT stabilizes at 40°F. If reactor coolant mass flow rate is 3 percent, which one of the following is the current core decay heat level?

A. 1 percent

B. 2 percent

C. 3 percent

D. 4 percent

ANSWER: B.

TOPIC: 193007
KNOWLEDGE: K1.08 [3.1/3.4]
QID: P1485

During a nuclear power plant outage, 5 percent of all steam generator (SG) tubes were plugged due to wall thinning. Full power reactor coolant system flow rate and average reactor coolant temperature (T_{ave}) have <u>not</u> changed. Given the following 100 percent power conditions <u>before</u> the outage:

T_{ave} = 578°F
$T_{S/G}$ = 538°F

Which one of the following will be the approximate SG pressure <u>after</u> the outage when the plant is returned to 100 percent power? (Assume the overall heat transfer coefficients for the S/Gs did <u>not</u> change.)

A. 960 psia

B. 930 psia

C. 900 psia

D. 870 psia

ANSWER: B.

TOPIC: 193007
KNOWLEDGE: K1.08 [3.1/3.4]
QID: P1782

A nuclear power plant is operating with the following parameters:

Reactor power	=	100 percent
Core ΔT	=	60°F
Reactor coolant system flow rate	=	100 percent
Average coolant temperature	=	587°F

A station blackout occurs and natural circulation is established with the following stable parameters:

Decay heat	=	1 percent
Core ΔT	=	30°F
Average coolant temperature	=	572°F

What is the core mass flow rate in percent?

A. 2.0 percent

B. 2.5 percent

C. 3.0 percent

D. 4.0 percent

ANSWER: A.

TOPIC: 193007
KNOWLEDGE: K1.08 [3.1/3.4]
QID: P2085

During a nuclear power plant outage, 6 percent of all steam generator (SG) tubes were plugged. Full-power reactor coolant system flow rate and average reactor coolant temperature (T_{ave}) have not changed. Given the following 100 percent power conditions before the outage:

T_{ave} = 584°F
$T_{S/G}$ = 544°F

Which one of the following will be the approximate SG pressure after the outage when the plant is returned to 100 percent power?

A. 974 psia

B. 954 psia

C. 934 psia

D. 914 psia

ANSWER: A.

TOPIC: 193007
KNOWLEDGE: K1.08 [3.1/3.4]
QID: P2585

During a nuclear power plant outage, 5 percent of all steam generator (SG) tubes were plugged. Full-power reactor coolant system flow rate and average reactor coolant temperature (T_{ave}) have not changed. Given the following 100 percent power conditions before the outage:

T_{ave} = 588°F
$T_{S/G}$ = 542°F

Which one of the following will be the approximate SG pressure after the outage when the plant is returned to 100 percent power?

A. 998 psia

B. 979 psia

C. 961 psia

D. 944 psia

ANSWER: C.

TOPIC: 193007
KNOWLEDGE: K1.08 [3.1/3.4]
QID: P2985

A nuclear power plant is operating at power. Total feedwater flow rate to all steam generators is 7.0 x 10^6 lbm/hr at a temperature of 440°F. The steam exiting the steam generators is at 1,000 psia with 100 percent steam quality.

Ignoring all other heat gain and loss mechanisms, what is the reactor core thermal power?

A. 1,335 MW

B. 1,359 MW

C. 1,589 MW

D. 1,612 MW

ANSWER: C.

TOPIC: 193007
KNOWLEDGE: K1.08 [3.1/3.4]
QID: P7639

A nuclear power plant is operating with the following stable steam generator (SG) and feedwater (FW) parameters:

SG pressure	=	1,000 psia
Total SG steam flow rate	=	1.0×10^7 lbm/hr (dry, saturated steam)
Feedwater inlet temperature	=	470°F

Based on the above information, what is the thermal power output of the reactor?

A. 740 MW

B. 1,328 MW

C. 2,169 MW

D. 3,497 MW

ANSWER: C.

TOPIC: 193008
KNOWLEDGE: K1.01 [2.8/3.0]
QID: P986

Which one of the following is an example of significant radiative heat transfer?

A. Heat transfer from the fuel pellet to the fuel cladding via direct contact.

B. Heat transfer from the reactor coolant to the feedwater in a steam generator.

C. Heat transfer from the center to the edge of a fuel pellet at end of core life.

D. Heat transfer from the fuel cladding to the reactor coolant through a stable vapor layer.

ANSWER: D.

TOPIC: 193008
KNOWLEDGE: K1.01 [2.8/3.0]
QID: P1186 (B1986)

Refer to the drawing of a pool boiling curve (see figure below). In which region of the curve does the most efficient form of heat transfer occur?

A. Region I

B. Region II

C. Region III

D. Region IV

ANSWER: B.

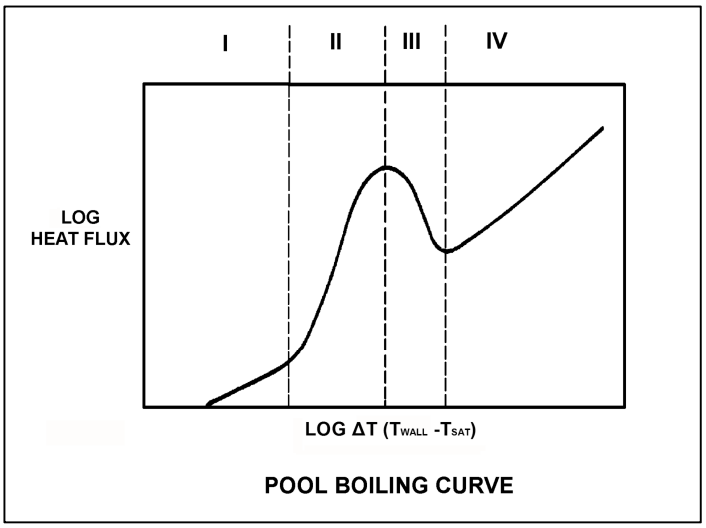

TOPIC: 193008
KNOWLEDGE: K1.01 [2.8/3.0]
QID: P1286 (B2088)

Refer to the drawing of a pool boiling curve (see figure below).

Which region of the curve contains the operating point at which the hottest locations of a reactor normally operate to transfer heat from the fuel cladding to the coolant at 100 percent power?

A. Region I

B. Region II

C. Region III

D. Region IV

ANSWER: B.

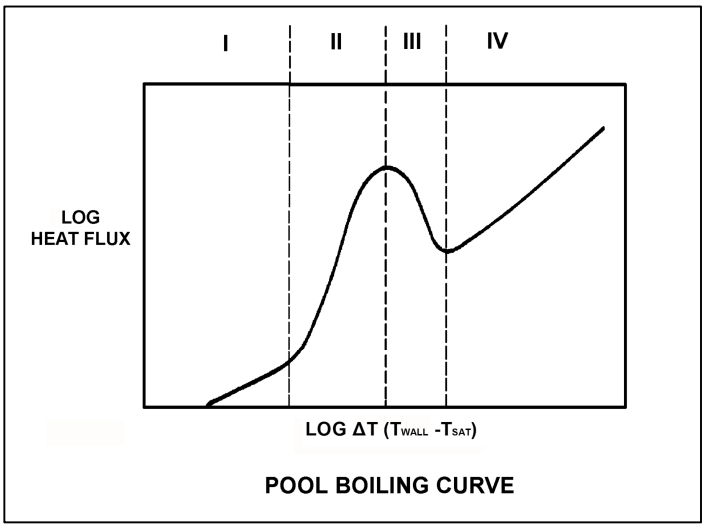

TOPIC: 193008
KNOWLEDGE: K1.02 [2.8/3.0]
QID: P85

Why does nucleate boiling improve heat transfer in a reactor core?

A. The formation of steam bubbles at nucleation sites on the fuel rod allows more heat to be transferred by conduction.

B. The formation of steam bubbles at nucleation sites on the fuel rod promotes local radiative heat transfer and allows more heat to be transferred by convection.

C. Heat is removed from the fuel rod as both sensible heat and latent heat of condensation, and the heat is transferred directly to the coolant by radiative heat transfer.

D. Heat is removed from the fuel rod as both sensible heat and latent heat of vaporization, and the motion of the steam bubbles causes rapid mixing of the coolant.

ANSWER: D.

TOPIC: 193008
KNOWLEDGE: K1.02 [2.8/3.0]
QID: P886

Convection heat transfer improves when nucleate boiling begins on the surface of a fuel rod because:

A. steam bubble formation decreases coolant flow rate along the fuel rod.

B. steam bubble formation increases coolant flow rate along the fuel rod.

C. a steam blanket begins to form along the surface of the fuel rod.

D. the motion of the steam bubbles causes rapid mixing of the coolant.

ANSWER: D.

TOPIC: 193008
KNOWLEDGE: K1.02 [2.8/3.0]
QID: P1086 (B2784)

How does the convective heat transfer coefficient vary from the bottom to the top of a fuel assembly if reactor coolant enters the fuel assembly as subcooled water and exits as superheated steam?

A. Increases continuously.

B. Increases, then decreases.

C. Decreases continuously.

D. Decreases, then increases.

ANSWER: B.

TOPIC: 193008
KNOWLEDGE: K1.02 [2.8/3.0]
QID: P1187

Nucleate boiling affects heat transfer from a fuel rod primarily by...

A. improving the conductive heat transfer from the fuel rod to the coolant.

B. improving the convective heat transfer from the fuel rod to the coolant.

C. degrading the conductive heat transfer from the fuel rod to the coolant.

D. degrading the convective heat transfer from the fuel rod to the coolant.

ANSWER: B.

TOPIC: 193008
KNOWLEDGE: K1.02 [2.8/3.0]
QID: P2386

Subcooled water enters the bottom of an operating reactor core. As the water flows upward past the fuel assemblies, steam bubbles form on the surface of a few fuel rods and are swept away.

If the coolant at the surface of the affected fuel rods had remained subcooled, average fuel temperature in the affected fuel rods would have been _____ because single-phase convection is a _____ efficient method of heat transfer than boiling.

A. higher; more

B. higher; less

C. lower; more

D. lower; less

ANSWER: B.

TOPIC: 193008
KNOWLEDGE: K1.02 [2.8/3.0]
QID: P2686 (B2486)

Case 1: Subcooled reactor coolant enters the bottom of a fuel assembly in a reactor operating at power. As the coolant flows upward through the fuel assembly, the water heats up and exits the fuel assembly still subcooled.

Case 2: Same as above except that reactor pressure is decreased such that the coolant begins to boil halfway up the fuel assembly, which results in a saturated steam-water mixture exiting the fuel assembly.

Assume that departure from nucleate boiling is avoided in both cases and that power level does not change. As compared to Case 1, the average fuel temperature for Case 2 will be _____ because boiling is a _____ efficient method of heat transfer.

A. higher; more

B. higher; less

C. lower; more

D. lower; less

ANSWER: C.

TOPIC: 193008
KNOWLEDGE: K1.02 [2.8/3.0]
QID: P2986 (B2986)

Subcooled reactor coolant enters the bottom of a fuel assembly and exits the top of the fuel assembly as a saturated steam-water mixture. How does the convective heat transfer coefficient change as the coolant travels upward through the fuel assembly?

A. Increases only

B. Increases, then decreases

C. Decreases only

D. Decreases, then increases

ANSWER: A.

TOPIC: 193008
KNOWLEDGE: K1.02 [2.8/3.0]
QID: P3786 (B3785)

Subcooled water enters a fuel assembly in a reactor operating at power. As the water flows upward through the fuel assembly, the water begins to boil and exits the fuel assembly as a saturated steam-water mixture.

If fuel assembly power is unchanged and system pressure is increased such that all of the water remains subcooled, the average fuel temperature in the fuel assembly would be _____ because boiling is a _____ efficient method of heat transfer.

A. higher; more

B. higher; less

C. lower; more

D. lower; less

ANSWER: A.

TOPIC: 193008
KNOWLEDGE: K1.02 [2.8/3.0]
QID: P5745 (B5744)

Initially, subcooled water is flowing into a fuel assembly with subcooled water exiting the fuel assembly several degrees hotter than when it entered. No boiling is occurring in the fuel assembly. Assume that fuel assembly thermal power and water flow rate remain the same.

System pressure is decreased, causing some of the water in contact with the fuel rods to boil during transit through the fuel assembly, but the water exiting the fuel assembly remains subcooled. Compared to the initial conditions, the average fuel temperature in the fuel assembly will be _____; and the temperature of the water exiting the fuel assembly will be _____.

A. higher; the same

B. higher; higher

C. lower; the same

D. lower; higher

ANSWER: D.

TOPIC: 193008
KNOWLEDGE: K1.03 [2.8/3.1]
QID: P86

Subcooled nucleate boiling is occurring along a heated surface. If the heat flux is increased slightly, what will be the effect on the differential temperature (ΔT) between the heated surface and the fluid? (Assume subcooled nucleate boiling is still occurring.)

A. Small increase in ΔT because of steam blanketing.

B. Large increase in ΔT because of steam blanketing.

C. Small increase in ΔT as vapor bubbles form and collapse.

D. Large increase in ΔT causing radiative heat transfer to become significant.

ANSWER: C.

TOPIC: 193008
KNOWLEDGE: K1.03 [2.8/3.1]
QID: P286 (B389)

Which one of the following characteristics will enhance steam bubble formation in water adjacent to a heated surface?

A. Chemicals dissolved in the water.

B. The absence of ionizing radiation exposure to the water.

C. A highly polished heat transfer surface with minimal scratches or cavities.

D. The presence of gases dissolved in the water.

ANSWER: D.

TOPIC: 193008
KNOWLEDGE: K1.03 [2.8/3.1]
QID: P387 (B388)

What type of boiling is described as follows?

The bulk temperature of the liquid is below saturation, but the temperature of the heat transfer surface is above saturation. Vapor bubbles form at the heat transfer surface, but condense in the bulk liquid so that no net generation of vapor is obtained.

A. Bulk boiling

B. Subcooled nucleate boiling

C. Transition boiling

D. Partial film boiling

ANSWER: B.

TOPIC: 193008
KNOWLEDGE: K1.03 [2.8/3.1]
QID: P1686 (B1087)

Which one of the following is a characteristic of subcooled nucleate boiling but not saturated nucleate boiling?

A. $T_{Cladding}$ equals T_{Sat}

B. $T_{Cladding}$ is greater than T_{Sat}

C. $T_{Bulk\ Coolant}$ equals T_{Sat}

D. $T_{Bulk\ Coolant}$ is less than T_{Sat}

ANSWER: D.

TOPIC: 193008
KNOWLEDGE: K1.03 [2.8/3.1]
QID: P1888 (B1786)

Which one of the following is a characteristic of saturated nucleate boiling but not subcooled nucleate boiling?

A. $T_{Cladding}$ equals T_{Sat}

B. $T_{Cladding}$ is greater than T_{Sat}

C. $T_{Bulk\ Coolant}$ equals T_{Sat}

D. $T_{Bulk\ Coolant}$ is less than T_{Sat}

ANSWER: C.

TOPIC: 193008
KNOWLEDGE: K1.03 [2.8/3.1]
QID: P2287 (B1086)

Which one of the following describes a reason for the increased heat transfer rate that occurs when nucleate boiling begins on the surface of a fuel rod?

A. Steam bubbles have a greater thermal conductivity than water.

B. The formation of steam bubbles increases coolant flow along the fuel rod.

C. Radiative heat transfer begins to supplement convective heat transfer.

D. The motion of the steam bubbles causes rapid mixing of the coolant.

ANSWER: D.

TOPIC: 193008
KNOWLEDGE: K1.03 [2.8/3.1]
QID: P2687 (B1287)

Which one of the following modes of heat transfer is characterized by steam bubbles moving away from a heated surface and collapsing in the bulk fluid?

A. Bulk boiling

B. Subcooled nucleate boiling

C. Saturated nucleate boiling

D. Saturated natural convection

ANSWER: B.

TOPIC: 193008
KNOWLEDGE: K1.03 [2.8/3.1]
QID: P2787 (B1285)

Which one of the following characteristics will enhance steam bubble formation in the coolant adjacent to a fuel rod?

A. Surface scratches or cavities in the fuel cladding.

B. Subsurface void defect in the fuel cladding.

C. Increased coolant velocity past the fuel rod.

D. Chemically inert material dissolved in the coolant.

ANSWER: A.

TOPIC: 193008
KNOWLEDGE: K1.03 [2.8/3.1]
QID: P3686 (B3685)

A nuclear power plant is currently shut down after several months of operation at 100 percent power. The shutdown cooling system is in operation, maintaining an average reactor coolant temperature of 280°F. A pressure control malfunction causes reactor coolant pressure to slowly and continuously decrease from 100 psia while reactor coolant temperature remains constant.

Which one of the following describes the location where nucleate boiling will first occur?

A. At a scratch on the surface of a fuel rod near the top of a fuel assembly.

B. At a scratch on the surface of a fuel rod near the bottom of a fuel assembly.

C. In the bulk fluid of a coolant channel near the top of a fuel assembly.

D. In the bulk fluid of a coolant channel near the bottom of a fuel assembly.

ANSWER: A.

TOPIC: 193008
KNOWLEDGE: K1.04 [3.1/3.3]
QID: P93

If departure from nucleate boiling occurs on the surface of a fuel rod, the surface temperature of the fuel rod will...

A. increase rapidly.

B. decrease rapidly.

C. increase gradually.

D. decrease gradually.

ANSWER: A.

TOPIC: 193008
KNOWLEDGE: K1.04 [3.1/3.3]
QID: P287 (B2987)

Which one of the following describes the heat transfer from a fuel rod experiencing departure from nucleate boiling? (ΔT refers to the difference between the fuel rod surface temperature and the coolant saturation temperature.)

A. Steam bubbles begin to blanket the fuel rod surface, causing a rapid increase in the ΔT for a given heat flux.

B. Steam bubbles completely blanket the fuel rod surface, causing a rapid decrease in the ΔT for a given heat flux.

C. Steam bubbles begin to form on the fuel rod surface, causing a rapid increase in the heat flux from the fuel rod for a given ΔT.

D. Steam bubbles completely blanket the fuel rod surface, causing a rapid increase in the heat flux from the fuel rod for a given ΔT.

ANSWER: A.

TOPIC: 193008
KNOWLEDGE: K1.04 [3.1/3.3]
QID: P1288 (B1985)

Departure from nucleate boiling should <u>not</u> be allowed to occur in the core because...

A. as steam bubbles begin to blanket the fuel rod, the radiative heat transfer decreases.

B. as steam bubbles in the coolant form and then collapse, water hammer occurs.

C. as steam bubbles begin to blanket the fuel rod, its temperature rises sharply.

D. as steam bubbles form in the coolant, voids-induced reactivity changes cause undesirable power changes.

ANSWER: C.

TOPIC: 193008
KNOWLEDGE: K1.04 [3.1/3.3]
QID: P3388 (B1288)

Which one of the following is indicated by a rapid increase in the temperature difference between the fuel cladding and the bulk coolant?

A. Bulk boiling is occurring.

B. Nucleate boiling is occurring.

C. Critical heat flux is increasing.

D. Departure from nucleate boiling is occurring.

ANSWER: D.

TOPIC: 193008
KNOWLEDGE: K1.05 [3.4/3.6]
QID: P138

Which one of the following reactor coolant system parameters has the <u>least</u> effect on margin to departure from nucleate boiling?

A. Pressurizer level

B. Local power density

C. Cold leg temperature

D. Coolant flow rate

ANSWER: A.

TOPIC: 193008
KNOWLEDGE: K1.05 [3.4/3.6]
QID: P144

An adequate subcooling margin during a loss of coolant accident is the most direct indication that _____ is being maintained.

A. steam generator water level

B. pressure level

C. core cooling

D. subcriticality

ANSWER: C.

TOPIC: 193008
KNOWLEDGE: K1.05 [3.4/3.6]
QID: P288

Which one of the following parameter changes will reduce the departure from nucleate boiling ratio?

A. Decreasing reactor power.

B. Increasing pressurizer pressure.

C. Increasing reactor coolant flow rate.

D. Increasing reactor coolant temperature.

ANSWER: D.

TOPIC: 193008
KNOWLEDGE: K1.05 [3.4/3.6]
QID: P1093

Which one of the following will increase the departure from nucleate boiling ratio?

A. Increasing reactor coolant temperature.

B. Increasing pressurizer pressure.

C. Increasing core bypass flow.

D. Increasing reactor power.

ANSWER: B.

TOPIC: 193008
KNOWLEDGE: K1.05 [3.4/3.6]
QID: P1787

A nuclear power plant is operating with the following initial conditions:

- Reactor power is 45 percent in the middle of a fuel cycle.
- Axial and radial power distributions are peaked in the center of the core.

Assuming reactor power level does <u>not</u> change, which one of the following will increase the steady-state departure from nucleate boiling ratio?

A. One reactor coolant pump trips with automatic rod control.

B. A spray valve malfunction decreases reactor coolant system pressure by 20 psig with <u>no</u> control rod motion.

C. The operator decreases reactor coolant boron concentration by 5 ppm with <u>no</u> control rod motion.

D. Core xenon-135 builds up in proportion to the axial and radial power distribution with automatic rod control.

ANSWER: D.

TOPIC: 193008
KNOWLEDGE: K1.05 [3.4/3.6]
QID: P1889

A nuclear power plant is operating with the following initial conditions:

- Reactor power is 45 percent in the middle of a fuel cycle.
- Axial and radial power distributions are peaked in the center of the core.

Which one of the following will decrease the steady-state departure from nucleate boiling ratio?

A. A reactor trip occurs and one control rod remains fully withdrawn from the core.

B. A pressurizer malfunction increases reactor coolant system pressure by 20 psig with no control rod motion.

C. The operator decreases reactor coolant boron concentration by 5 ppm with no control rod motion.

D. Core xenon-135 builds up in proportion to the axial and radial power distribution with automatic rod control.

ANSWER: C.

TOPIC: 193008
KNOWLEDGE: K1.05 [3.4/3.6]
QID: P2288

A nuclear power plant is operating with the following initial conditions:

- Reactor power is 55 percent in the middle of a fuel cycle.
- Axial and radial power distributions are peaked in the center of the core.

Which one of the following will decrease the steady-state departure from nucleate boiling ratio?

A. A reactor trip occurs and one control rod remains fully withdrawn from the core.

B. A pressurizer malfunction increases reactor coolant system pressure by 20 psig.

C. The operator increases reactor coolant boron concentration by 5 ppm with no control rod motion.

D. Core xenon-135 depletes in proportion to the axial and radial power distribution with no control rod motion.

ANSWER: D.

TOPIC: 193008
KNOWLEDGE: K1.05 [3.4/3.6]
QID: P2387

A nuclear power plant is operating with the following initial conditions:

- Reactor power is 45 percent in the middle of a fuel cycle.
- Axial and radial power distributions are peaked in the center of the core.

Which one of the following will decrease the steady-state departure from nucleate boiling ratio?

A. A reactor trip occurs and one control rod remains fully withdrawn from the core.

B. A pressurizer malfunction decreases reactor coolant system pressure by 20 psig with no control rod motion.

C. The operator increases reactor coolant boron concentration by 5 ppm with no control rod motion.

D. Core xenon-135 builds up in proportion to the axial and radial power distribution with automatic rod control.

ANSWER: B.

TOPIC: 193008
KNOWLEDGE: K1.05 [3.4/3.6]
QID: P2487

A reactor is shutdown with all control rods inserted. The reactor coolant system (RCS) is at normal operating temperature and pressure. Which one of the following will decrease the departure from nucleate boiling ratio for the reactor? (Assume the reactor remains shutdown.)

A. Fully withdrawing a bank of shutdown rods.

B. Diluting RCS boron concentration by 50 ppm.

C. Reducing RCS flow rate by one percent.

D. Increasing RCS pressure by 10 psig.

ANSWER: C.

TOPIC: 193008
KNOWLEDGE: K1.05 [3.4/3.6]
QID: P2587

A nuclear power plant is operating with the following initial conditions:

- Reactor power is 55 percent in the middle of a fuel cycle.
- Axial and radial power distributions are peaked in the center of the core.

Which one of the following will increase the steady-state departure from nucleate boiling ratio?

A. A reactor trip occurs and one control rod remains fully withdrawn from the core.

B. A pressurizer malfunction decreases reactor coolant system pressure by 20 psig.

C. The operator decreases reactor coolant boron concentration by 5 ppm with no rod motion.

D. Core xenon-135 depletes in proportion to the axial and radial power distribution with no rod motion.

ANSWER: A.

TOPIC: 193008
KNOWLEDGE: K1.05 [3.4/3.6]
QID: P2788

A nuclear power plant is operating with the following initial conditions:

- Reactor power is 45 percent in the middle of a fuel cycle.
- Axial and radial power distributions are peaked in the center of the core.

Which one of the following will increase the steady-state departure from nucleate boiling ratio?

A. Core xenon-135 decays with no change in the axial and radial power distributions.

B. A reactor trip occurs and one control rod remains fully withdrawn from the core.

C. The operator decreases reactor coolant boron concentration by 5 ppm with no control rod motion.

D. A pressurizer malfunction decreases reactor coolant system pressure by 20 psig with no control rod motion.

ANSWER: B.

TOPIC: 193008
KNOWLEDGE: K1.05 [3.4/3.6]
QID: P2989

A reactor is shut down at normal operating temperature and pressure with all control rods inserted. Which one of the following will decrease the departure from nucleate boiling ratio for this reactor? (Assume the reactor remains shutdown.)

A. Fully withdrawing a bank of shutdown rods.

B. Diluting reactor coolant boron concentration by 50 ppm.

C. Reducing reactor coolant temperature by 5°F.

D. Decreasing reactor coolant pressure by 10 psig.

ANSWER: D.

TOPIC: 193008
KNOWLEDGE: K1.06 [2.8/2.9]
QID: P87

Which one of the following parameter changes would move a reactor farther away from the critical heat flux?

A. Decrease pressurizer pressure.

B. Decrease reactor coolant flow.

C. Decrease reactor power.

D. Increase reactor coolant temperature.

ANSWER: C.

TOPIC: 193008
KNOWLEDGE: K1.06 [2.8/2.9]
QID: P145

How does the critical heat flux vary from the bottom to the top of a typical fuel assembly during normal 100 percent power operation?

A. Increases continuously.

B. Increases, then decreases.

C. Decreases continuously.

D. Decreases, then increases.

ANSWER: C.

TOPIC: 193008
KNOWLEDGE: K1.06 [2.8/2.9]
QID: P587

The heat flux that causes departure from nucleate boiling is the...

A. critical heat flux.

B. nucleate heat flux.

C. transition heat flux.

D. departure heat flux.

ANSWER: A.

TOPIC: 193008
KNOWLEDGE: K1.06 [2.8/2.9]
QID: P989

The critical heat flux is the heat transfer rate per unit _____ of fuel rod that will initially cause _____.

A. volume; nucleate boiling

B. area; nucleate boiling

C. volume; departure from nucleate boiling

D. area; departure from nucleate boiling

ANSWER: D.

TOPIC: 193008
KNOWLEDGE: K1.06 [2.8/2.9]
QID: P1087

How does critical heat flux (CHF) vary with core height during normal full power operation?

A. CHF increases from the bottom to the top of the core.

B. CHF decreases from the bottom to the core midplane, then increases from the midplane to the top of the core.

C. CHF decreases from the bottom to the top of the core.

D. CHF increases from the bottom to the core midplane, then decreases from the midplane to the top of the core.

ANSWER: C.

TOPIC: 193008
KNOWLEDGE: K1.06 [2.8/2.9]
QID: P1586

A reactor is operating at steady-state 75 percent power. Which one of the following parameter changes will cause the core to operate closer to the critical heat flux? (Assume reactor power does not change unless stated.)

A. Decrease reactor coolant flow rate by 5 percent.

B. Decrease reactor power by 10 percent.

C. Decrease reactor coolant temperature by 3°F.

D. Increase pressurizer pressure by 20 psia.

ANSWER: A.

TOPIC: 193008
KNOWLEDGE: K1.06 [2.8/2.9]
QID: P3587

Which one of the following is most likely to result in fuel cladding damage?

A. Operating at 110 percent of reactor vessel design pressure.

B. An inadvertent reactor trip from 100 percent power.

C. Operating at a power level that exceeds the critical heat flux.

D. Operating with saturated nucleate boiling occurring in a fuel assembly.

ANSWER: C.

TOPIC: 193008
KNOWLEDGE: K1.07 [2.6/2.6]
QID: P689

A small increase in differential temperature at the fuel cladding-to-coolant interface causes increased steam blanketing and a reduction in heat flux. This describes which type of boiling?

A. Subcooled boiling

B. Nucleate boiling

C. Partial film boiling

D. Total film boiling

ANSWER: C.

TOPIC: 193008
KNOWLEDGE: K1.07 [2.6/2.6]
QID: P1089

Refer to the drawing of a pool boiling curve (see figure below).

Choose the region of the curve where transition boiling is the primary heat transfer process.

A. Region I

B. Region II

C. Region III

D. Region IV

ANSWER: C.

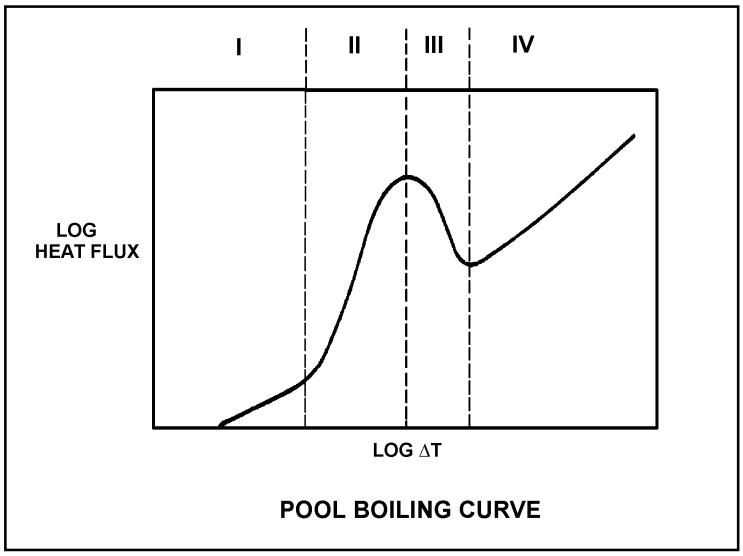

TOPIC: 193008
KNOWLEDGE: K1.07 [2.6/2.6]
QID: P1689 (B1386)

Refer to the drawing of a pool boiling curve (see figure below).

Which one of the points shown marks the onset of transition boiling?

A. A

B. B

C. C

D. D

ANSWER: B.

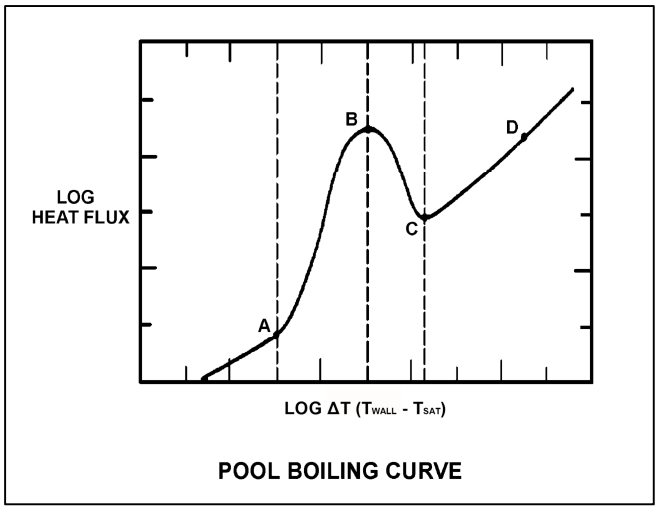

TOPIC: 193008
KNOWLEDGE: K1.07 [2.6/2.6]
QID: P1891 (B987)

Which one of the following describes the heat transfer conditions in a fuel assembly that is experiencing transition boiling?

A. Complete steam blanketing of the fuel rod surface.

B. Alternate wetting and drying of the fuel rod surface.

C. Saturated nucleate boiling.

D. Subcooled nucleate boiling.

ANSWER: B.

TOPIC: 193008
KNOWLEDGE: K1.07 [2.6/2.6]
QID: P1987 (B2288)

Which one of the following describes the conditions in a fuel assembly that is experiencing transition boiling?

A. Complete steam blanketing of the fuel rod surface.

B. Alternate wetting and drying of the fuel rod surface.

C. Steam bubbles form and collapse on the fuel rod surface.

D. Steam bubbles form on the fuel rod surface and are swept away by subcooled bulk coolant.

ANSWER: B.

TOPIC: 193008
KNOWLEDGE: K1.07 [2.6/2.6]
QID: P2188 (B2185)

Refer to the drawing of a pool boiling curve (see figure below).

Which one of the following describes the heat transfer conditions in a fuel assembly that is experiencing region III heat transfer?

A. Complete steam blanketing of the fuel rod surface.

B. Alternate wetting and drying of the fuel rod surface.

C. Saturated nucleate boiling.

D. Subcooled nucleate boiling.

ANSWER: B.

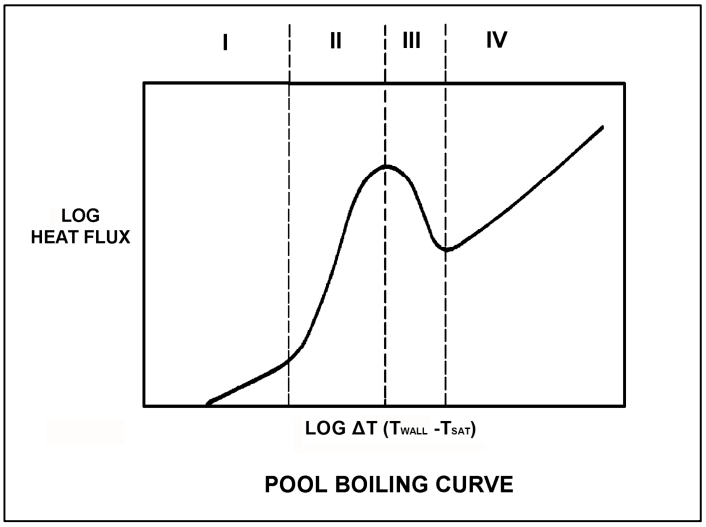

TOPIC: 193008
KNOWLEDGE: K1.07 [2.6/2.6]
QID: P2289 (B289)

Refer to the drawing of a pool-boiling curve (see figure below).

With heat flux continuously increasing, the point at which the critical heat flux is reached (point B), marks the beginning of...

A. nucleate boiling.

B. stable film boiling.

C. partial film boiling.

D. single-phase convection.

ANSWER: C.

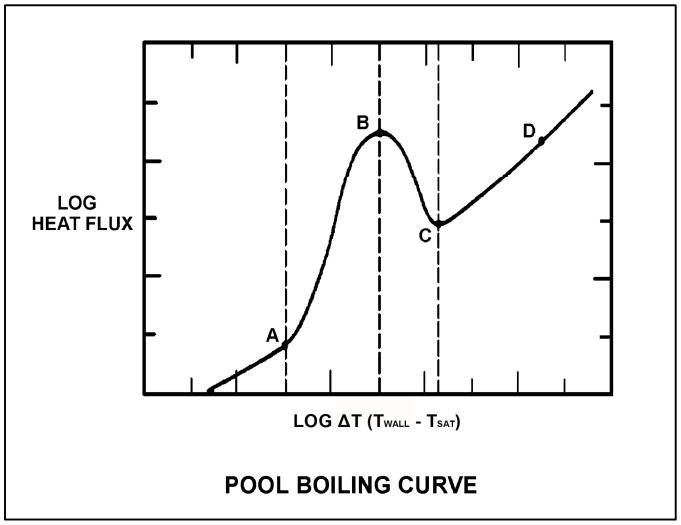

TOPIC: 193008
KNOWLEDGE: K1.07 [2.6/2.6]
QID: P2688 (B1486)

Refer to the drawing of a pool boiling curve (see figure below).

Which one of the following regions represents the most unstable mode of heat transfer?

A. Region I

B. Region II

C. Region III

D. Region IV

ANSWER: C.

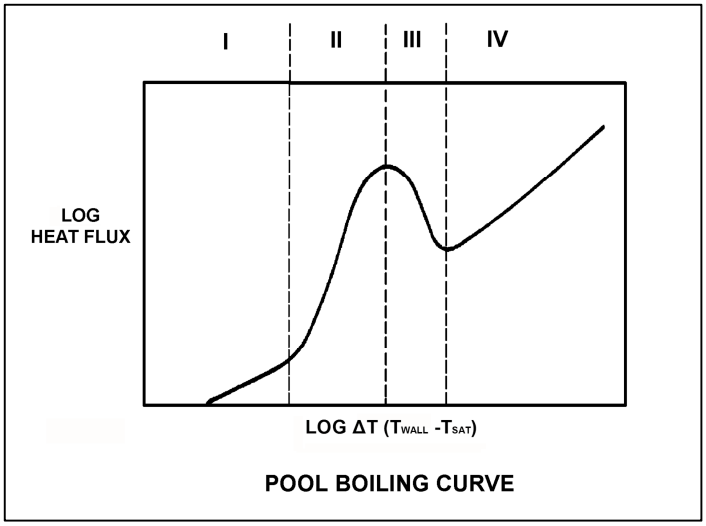

TOPIC: 193008
KNOWLEDGE: K1.08 [2.6/2.6]
QID: P88

Film boiling heat transfer is...

A. the most efficient method of boiling heat transfer.

B. heat transfer through an oxide film on the cladding.

C. heat transfer being accomplished with no enthalpy change.

D. heat transfer through a vapor blanket that covers the fuel cladding.

ANSWER: D.

TOPIC: 193008
KNOWLEDGE: K1.08 [2.6/2.6]
QID: P139

Reactor power is increased sufficiently to cause steam blanketing of several fuel rods. This condition is being caused by...

A. departure from nucleate boiling.

B. subcooled nucleate boiling.

C. saturated nucleate boiling.

D. onset of nucleate boiling.

ANSWER: A.

TOPIC: 193008
KNOWLEDGE: K1.08 [2.6/2.6]
QID: P889 (B1987)

If the fission rate in a reactor core steadily increases, the mode of heat transfer that occurs immediately after the critical heat flux is reached is called...

A. transition boiling.

B. subcooled nucleate boiling.

C. saturated nucleate boiling.

D. stable film boiling.

ANSWER: A.

TOPIC: 193008
KNOWLEDGE: K1.08 [2.6/2.6]
QID: P1587 (B1587)

Refer to the drawing of a pool boiling curve (see figure below).

Which one of the points shown marks the smallest ΔT at which stable film boiling can exist?

A. A

B. B

C. C

D. D

ANSWER: C.

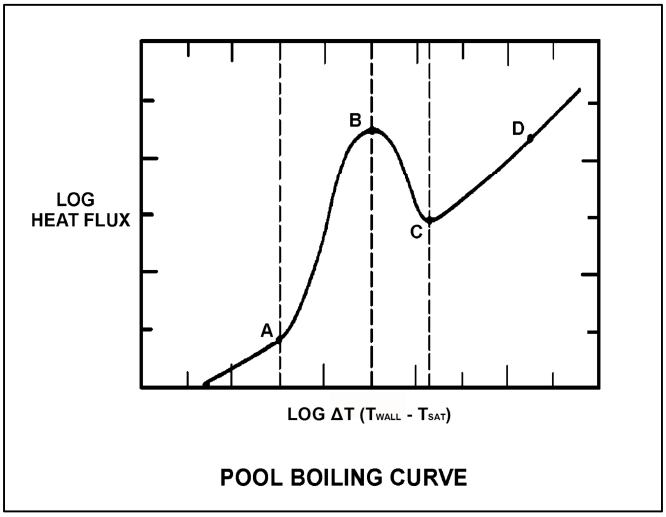

TOPIC: 193008
KNOWLEDGE: K1.08 [2.6/2.6]
QID: P2588 (B2588)

Refer to the drawing of a pool boiling curve (see figure below).

Which one of the following describes the conditions in a fuel assembly that is experiencing region IV heat transfer?

A. Complete steam blanketing of the fuel rod surface.

B. Alternate wetting and drying of the fuel rod surface.

C. Saturated nucleate boiling.

D. Subcooled nucleate boiling.

ANSWER: A.

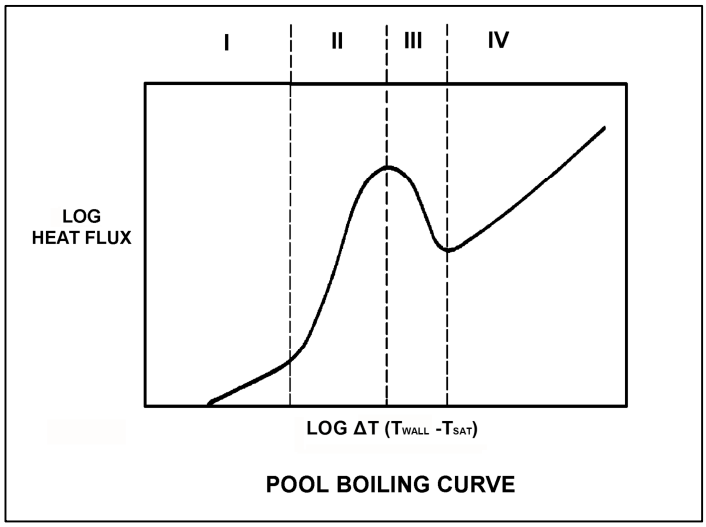

TOPIC: 193008
KNOWLEDGE: K1.08 [2.6/2.6]
QID: P3488 (B3485)

During a loss of coolant accident, some fuel rods may experience stable film boiling. Which one of the following types of heat transfer from the fuel cladding will increase significantly when stable film boiling begins?

A. Forced convection

B. Natural convection

C. Conduction

D. Radiation

ANSWER: D.

TOPIC: 193008
KNOWLEDGE: K1.10 [2.9/3.1]
QID: P89

The departure from nucleate boiling (DNB) ratio is defined as the...

A. actual heat flux divided by the critical heat flux.

B. critical heat flux divided by the actual heat flux.

C. actual core thermal power divided by the rated core thermal power.

D. rated core thermal power divided by the actual core thermal power.

ANSWER: B.

TOPIC: 193008
KNOWLEDGE: K1.10 [2.9/3.1]
QID: P289

In the definition of departure from nucleate boiling ratio, the term "actual heat flux" refers to the...

A. heat transfer rate per unit area at any point along the fuel rod.

B. average heat transfer rate per unit area across the core.

C. integrated heat transfer rate along the entire fuel rod.

D. total heat transfer rate along the entire fuel rod.

ANSWER: A.

TOPIC: 193008
KNOWLEDGE: K1.10 [2.9/3.1]
QID: P1190

A reactor is operating at steady-state 100 percent power near the end of a fuel cycle with all control rods fully withdrawn. At what axial location in a typical fuel assembly will the <u>maximum</u> departure from nucleate boiling ratio occur?

A. At the top of the fuel assembly.

B. At the bottom of the fuel assembly.

C. Between the bottom and midplane of the fuel assembly.

D. Between the midplane and the top of the fuel assembly.

ANSWER: B.

TOPIC: 193008
KNOWLEDGE: K1.10 [2.9/3.1]
QID: P2590

If a reactor is operating with the departure from nucleate boiling ratio at its limit, which one of the following is indicated?

A. None of the fuel rods are experiencing critical heat flux.

B. A small fraction of the fuel rods may be experiencing critical heat flux.

C. All radioactive fission products are being contained within the reactor fuel.

D. All radioactive fission products are being contained within either the reactor fuel or the reactor vessel.

ANSWER: B.

TOPIC: 193008
KNOWLEDGE: K1.14 [2.6/2.7]
QID: P389 (B588)

Core heat transfer rate is <u>maximized</u> by the presence of...

A. laminar flow with no nucleate boiling.

B. turbulent flow with no nucleate boiling.

C. laminar flow with nucleate boiling.

D. turbulent flow with nucleate boiling.

ANSWER: D.

TOPIC: 193008
KNOWLEDGE: K1.14 [2.6/2.7]
QID: P690

The heat transfer coefficient for the core will be directly increased if: (Assume bulk coolant subcooling.)

A. the coolant temperature is decreased.

B. the coolant flow rate is decreased.

C. nucleate boiling occurs in the coolant.

D. the coolant flow is laminar instead of turbulent.

ANSWER: C.

TOPIC: 193008
KNOWLEDGE: K1.14 [2.6/2.7]
QID: P891

Increasing coolant flow rate through a reactor core improves heat transfer from the fuel because a higher coolant flow rate _____ the laminar film thickness and _____ the temperature of the coolant adjacent to the fuel.

A. increases; raises

B. increases; lowers

C. decreases; raises

D. decreases; lowers

ANSWER: D.

TOPIC: 193008
KNOWLEDGE: K1.14 [2.6/2.7]
QID: P1691

Which one of the following will minimize core heat transfer?

A. Laminar flow with no nucleate boiling.

B. Turbulent flow with no nucleate boiling.

C. Laminar flow with nucleate boiling.

D. Turbulent flow with nucleate boiling.

ANSWER: A.

TOPIC: 193008
KNOWLEDGE: K1.15 [3.6/3.8]
QID: P90

A nuclear power plant is operating at 100 percent power. The reactor coolant subcooling margin will be <u>directly</u> reduced by…

A. increasing reactor coolant temperature.

B. increasing pressurizer pressure.

C. increasing reactor coolant flow rate.

D. increasing pressurizer level.

ANSWER: A.

TOPIC: 193008
KNOWLEDGE: K1.15 [3.6/3.8]
QID: P290

The difference between the actual temperature and the saturation temperature of a liquid is the...

A. critical heat flux.

B. saturation margin.

C. subcooling margin.

D. departure from nucleate boiling ratio.

ANSWER: C.

TOPIC: 193008
KNOWLEDGE: K1.15 [3.6/3.8]
QID: P393

Which one of the following must be present to assure adequate core cooling following a small loss of coolant accident?

A. Subcooling margin greater than zero.

B. Pressurizer level in the indicating range.

C. Emergency cooling injection flow greater than zero.

D. Pressurizer pressure greater than the safety injection actuation setpoint.

ANSWER: A.

TOPIC: 193008
KNOWLEDGE: K1.15 [3.6/3.8]
QID: P992

Which one of the following will increase the reactor coolant system (RCS) subcooling margin with the reactor operating at full power?

A. Decreased RCS pressure.

B. Decreased RCS hot leg temperature.

C. Increased RCS cold leg temperature.

D. Increased concentration of soluble gases in the RCS.

ANSWER: B.

TOPIC: 193008
KNOWLEDGE: K1.15 [3.6/3.8]
QID: P1491

A 60°F/hour reactor coolant system (RCS) cooldown and depressurization with natural circulation is in progress. After one hour, RCS subcooling will be minimum in the...

A. reactor core.

B. RCS loop hot leg.

C. RCS loop cold leg.

D. reactor vessel head.

ANSWER: D.

TOPIC: 193008
KNOWLEDGE: K1.15 [3.6/3.8]
QID: P2090

A reactor coolant system (RCS) cooldown and depressurization is in progress on natural circulation following a loss of offsite power. The following conditions currently exist:

RCS T_{cold} = 520°F, decreasing
RCS T_{hot} = 538°F, decreasing
Pressurizer pressure = 2,000 psia, decreasing

If the cooldown rate is being maintained at 50°F/hr, which one of the following locations is most likely to experience sustained steam voiding?

A. Reactor vessel head

B. RCS loop hot leg

C. Steam generator U-tubes

D. Reactor core

ANSWER: A.

TOPIC: 193008
KNOWLEDGE: K1.15 [3.6/3.8]
QID: P2591

Which one of the following is most likely to result in steam bubble formation in the reactor vessel head while maintaining a 60°F subcooling margin in the hottest reactor coolant system (RCS) hot leg?

A. Performing a 25°F/hr RCS cooldown with natural circulation.

B. Performing a 50°F/hr RCS cooldown with natural circulation.

C. Performing a 25°F/hr RCS heatup with forced circulation.

D. Performing a 50°F/hr RCS heatup with forced circulation.

ANSWER: B.

TOPIC: 193008
KNOWLEDGE: K1.15 [3.6/3.8]
QID: P2790

Which one of the following is most likely to result in steam bubble formation in a reactor vessel head while maintaining a 40°F subcooling margin in the hottest RCS hot leg?

A. Performing a 25°F/hr RCS cooldown with natural circulation.

B. Performing a 25°F/hr RCS cooldown with forced circulation.

C. Performing a 50°F/hr RCS cooldown with natural circulation.

D. Performing a 50°F/hr RCS cooldown with forced circulation.

ANSWER: C.

TOPIC: 193008
KNOWLEDGE: K1.15 [3.6/3.8]
QID: P2890

A nuclear power plant maintains the reactor coolant system (RCS) cold leg temperature (T_{cold}) at 557°F from 0 percent to 100 percent power. At 100 percent power, the reactor differential temperature (T_{hot} - T_{cold}) is 60°F.

If this plant also maintains RCS pressure constant at 2,235 psig, which one of the following is the approximate RCS subcooling margin at 50 percent power?

A. 30°F

B. 36°F

C. 66°F

D. 96°F

ANSWER: C.

TOPIC: 193008
KNOWLEDGE: K1.15 [3.6/3.8]
QID: P2991

Assume that a 30°F subcooling margin is maintained in the reactor coolant system (RCS) hot legs during each of the following shutdown reactor cooldown operations. Which one of the following will maintain the greatest subcooling margin in the reactor vessel head?

A. Performing a 25°F/hr RCS cooldown with natural circulation using one steam generator.

B. Performing a 25°F/hr RCS cooldown with all reactor coolant pumps running.

C. Performing a 100°F/hr RCS cooldown with natural circulation using all steam generators.

D. Performing a 100°F/hr RCS cooldown with one reactor coolant pump running.

ANSWER: B.

TOPIC: 193008
KNOWLEDGE: K1.16 [2.4/2.6]
QID: P391 (B1989)

Refer to the drawing of a fuel rod and adjacent coolant flow channel (see figure below).

With a nuclear power plant operating at steady-state 100 percent reactor power at the beginning of a fuel cycle, which one of the following has the greater temperature difference?

A. Fuel pellet centerline-to-pellet surface

B. Fuel pellet surface-to-cladding gap

C. Zircaloy cladding

D. Coolant laminar layer

ANSWER: A.

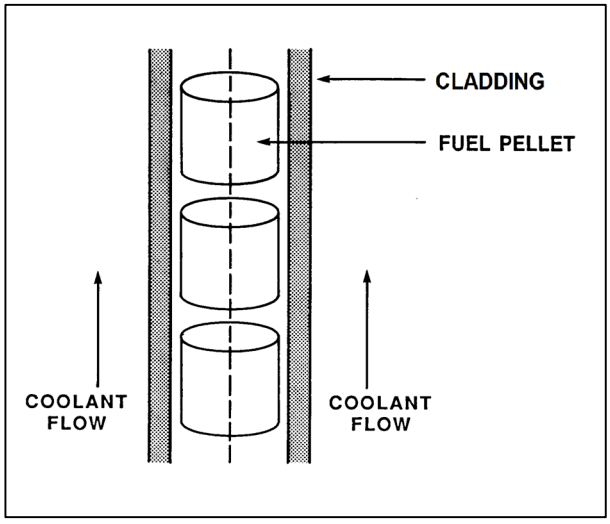

TOPIC: 193008
KNOWLEDGE: K1.17 [2.9/3.2]
QID: P692

During a plant cooldown and depressurization with forced circulation, reactor coolant system (RCS) loop flow indications and reactor coolant pump (RCP) motor current indications become erratic. These abnormal indications are most likely caused by...

A. RCP cavitation.

B. RCP runout.

C. RCS loop water hammer.

D. RCS hot leg saturation.

ANSWER: A.

TOPIC: 193008
KNOWLEDGE: K1.18 [2.3/2.5]
QID: P1790 (B1789)

Single-phase coolant flow resistance in a reactor core is directly proportional to the square of coolant _____; and inversely proportional to _____.

A. velocity; fuel assembly length

B. temperature; fuel assembly length

C. velocity; coolant channel cross-sectional area

D. temperature; coolant channel cross-sectional area

ANSWER: C.

TOPIC: 193008
KNOWLEDGE: K1.18 [2.3/2.5]
QID: P5446 (B5445)

Refer to the drawing of a section of pipe that contains flowing subcooled water (see figure below).

Given:

- Pressure at P_1 is 24 psig.
- Pressure at P_2 is 16 psig.
- Pressure change due to change in velocity is 2 psig.
- Pressure change due to change in elevation is 10 psig.

The pressure decrease due to friction head loss between P_1 and P_2 is _____; and the direction of flow is from _____.

A. 2 psig; left to right

B. 2 psig; right to left

C. 4 psig; left to right

D. 4 psig; right to left

ANSWER: D.

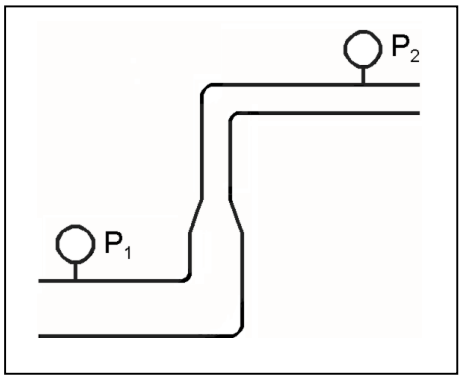

TOPIC: 193008
KNOWLEDGE: K1.18 [2.3/2.5]
QID: P5847 (B5845)

Refer to the drawing of a section of pipe that contains flowing subcooled water (see figure below).

Given:

- Pressure at P_1 is 26 psig.
- Pressure at P_2 is 34 psig.
- Pressure change due to change in velocity is 2 psig.
- Pressure change due to change in elevation is 8 psig.

The pressure decrease due to friction head loss between P_1 and P_2 is _____; and the direction of flow is from _____.

A. 2 psig; left to right

B. 2 psig; right to left

C. 4 psig; left to right

D. 4 psig; right to left

ANSWER: A.

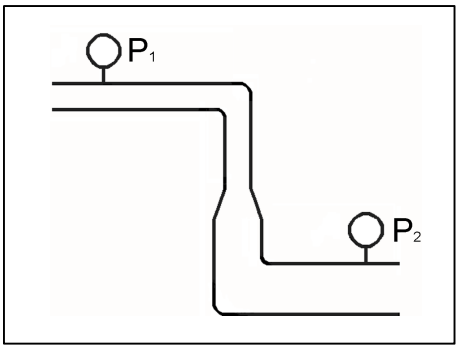

TOPIC: 193008
KNOWLEDGE: K1.18 [2.3/2.5]
QID: P6648 (B6646)

Refer to the drawing of a section of pipe that contains flowing subcooled water. (See figure below).

Given:

- Pressure at P_1 is 30 psig.
- Pressure at P_2 is 32 psig.
- Pressure change due to change in velocity is 2 psig.
- Pressure change due to change in elevation is 2 psig.

The pressure decrease due to friction head loss between P_1 and P_2 is _____; and the direction of flow is from _____.

A. 2 psig; left to right

B. 2 psig; right to left

C. 6 psig; left to right

D. 6 psig; right to left

ANSWER: B.

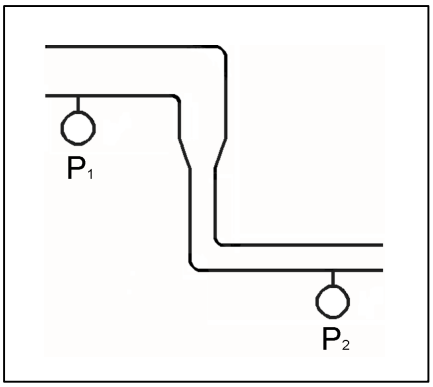

TOPIC: 193008
KNOWLEDGE: K1.18 [2.3/2.5]
QID: P7048 (B7046)

Refer to the drawing of a section of pipe that contains flowing subcooled water (see figure below).

Given:

- Pressure at P_1 is 34 psig.
- Pressure at P_2 is 20 psig.
- Pressure change due to change in velocity is 2 psig.
- Pressure change due to change in elevation is 8 psig.

The pressure decrease due to friction head loss between P_1 and P_2 is _____; and the direction of flow is from _____.

A. 2 psig; left to right

B. 2 psig; right to left

C. 4 psig; left to right

D. 4 psig; right to left

ANSWER: D.

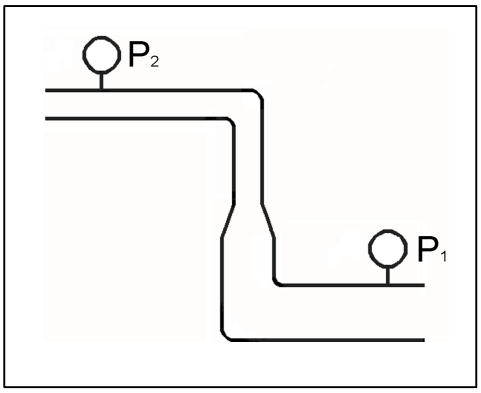

TOPIC: 193008
KNOWLEDGE: K1.18 [2.3/2.5]
QID: P7680 (B7680)

Refer to the drawing of a section of pipe that contains flowing subcooled water (see figure below).

Given:

- The pressure at P_1 is 20 psig.
- The pressure at P_2 is 20 psig.
- The pressure change caused by the change in velocity is 2 psig.
- The pressure change caused by the change in elevation is 8 psig.

The pressure decrease due to friction head loss between P_1 and P_2 is _____; and the direction of flow is from _____.

A. 6 psig; left to right

B. 6 psig; right to left

C. 10 psig; left to right

D. 10 psig; right to left

ANSWER: B.

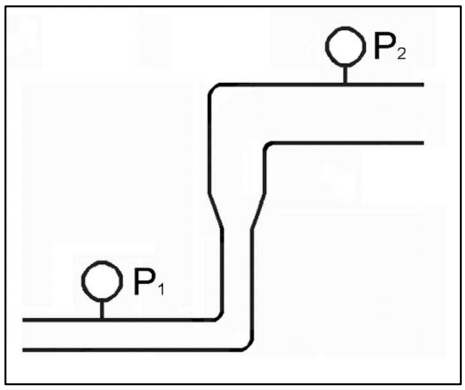

TOPIC: 193008
KNOWLEDGE: K1.19 [2.5/2.8]
QID: P1192

A reactor is producing 3,400 MW of thermal output with a reactor vessel differential temperature (ΔT) of 60°F and a reactor vessel mass flow rate of 1.4 x 10^8 lbm/hr. If core ΔT is 63.6°F, what is core bypass mass flow rate? (Assume bypass flow ΔT equals 0°F.)

A. 7.92 x 10^6 lbm/hr

B. 8.40 x 10^6 lbm/hr

C. 1.26 x 10^8 lbm/hr

D. 1.32 x 10^8 lbm/hr

ANSWER: A.

TOPIC: 193008
KNOWLEDGE: K1.19 [2.5/2.8]
QID: P1886

A reactor is producing 3,400 MW of thermal output with a reactor vessel differential temperature (ΔT) of 60°F and a reactor vessel mass flow rate of 1.0 x 10^8 lbm/hr. If core ΔT is 63.6°F, what is core bypass mass flow rate? (Assume bypass flow ΔT equals 0°F.)

A. 5.66 x 10^6 lbm/hr

B. 8.40 x 10^6 lbm/hr

C. 3.60 x 10^7 lbm/hr

D. 9.43 x 10^7 lbm/hr

ANSWER: A.

TOPIC: 193008
KNOWLEDGE: K1.19 [2.5/2.8]
QID: P2291

A reactor is producing 3,400 MW of thermal output with a reactor vessel differential temperature (ΔT) of 60°F and a reactor vessel mass flow rate of 1.1×10^8 lbm/hr. If core ΔT is 63.6°F, what is core bypass mass flow rate? (Assume bypass flow ΔT equals 0°F.)

A. 5.66×10^6 lbm/hr

B. 6.23×10^6 lbm/hr

C. 5.66×10^7 lbm/hr

D. 6.23×10^7 lbm/hr

ANSWER: B.

TOPIC: 193008
KNOWLEDGE: K1.20 [2.9/2.9]
QID: P590

Adequate core bypass flow is needed to...

A. cool the excore nuclear instrument detectors.

B. provide reactor coolant pump minimum flow requirements.

C. prevent stratification of reactor coolant inside the reactor vessel lower head.

D. equalize the temperatures between the reactor vessel and the reactor vessel upper head.

ANSWER: D.

TOPIC: 193008
KNOWLEDGE: K1.20 [2.9/2.9]
QID: P1391

Which one of the following describes a function of core bypass flow?

A. Provides a means of measuring core flow rate.

B. Prevents boron precipitation in the core baffle area.

C. Prevents excessive reactor vessel wall differential temperature.

D. Provides cooling to various reactor vessel internal components.

ANSWER: D.

TOPIC: 193008
KNOWLEDGE: K1.20 [2.9/2.9]
QID: P1488

Which one of the following is a function of core bypass flow?

A. Provides mixing of coolant in the reactor vessel head.

B. Provides even coolant flow distribution through the fuel.

C. Ensures natural circulation will be initiated when forced circulation is lost.

D. Ensures core exit thermocouple readings represent average fuel temperatures.

ANSWER: A.

TOPIC: 193008
KNOWLEDGE: K1.21 [3.9/4.2]
QID: P91

Maximizing the elevation difference between the core thermal center and the steam generator thermal center and minimizing flow restrictions in the reactor coolant system (RCS) piping are features of nuclear power plant designs that...

A. minimize the RCS volume.

B. maximize the RCS flow rate during forced circulation.

C. ensure a maximum RCS loop transit time.

D. ensure RCS natural circulation flow can be established.

ANSWER: D.

TOPIC: 193008
KNOWLEDGE: K1.21 [3.9/4.2]
QID: P292

Which one of the following must exist for natural circulation flow to occur?

A. The heat source must be larger than the heat sink.

B. The heat source must be located higher than the heat sink.

C. The heat sink must be larger than the heat source.

D. The heat sink must be located higher than the heat source.

ANSWER: D.

TOPIC: 193008
KNOWLEDGE: K1.21 [3.9/4.2]
QID: P893

The driving head for natural circulation flow through the core is developed by differences in _____ between the hot leg and the cold leg.

A. water density

B. water volume

C. pipe diameter

D. piping length

ANSWER: A.

TOPIC: 193008
KNOWLEDGE: K1.21 [3.9/4.2]
QID: P1387

If the steam generator thermal centers were at the same elevation as the reactor core thermal center, natural circulation flow in the reactor coolant system would...

A. not occur.

B. not be affected.

C. be greater than if they were at different elevations.

D. flow in the reverse direction.

ANSWER: A.

TOPIC: 193008
KNOWLEDGE: K1.21 [3.9/4.2]
QID: P1393

A reactor is shut down with natural circulation core cooling. Decay heat generation is equivalent to 1.0 percent of rated thermal power. Stable natural circulation mass flow rate is 1,000 gpm.

When decay heat generation decreases to 0.5 percent of rated thermal power, stable natural circulation flow rate will be approximately...

A. 125 gpm.

B. 250 gpm.

C. 707 gpm.

D. 794 gpm.

ANSWER: D.

TOPIC: 193008
KNOWLEDGE: K1.21 [3.9/4.2]
QID: P1692

A reactor is shut down with natural circulation core cooling. Decay heat generation is equivalent to 1.0 percent of rated thermal power. Core differential temperature (ΔT) has stabilized at 16°F.

When decay heat generation decreases to 0.5 percent of rated thermal power, core ΔT will be approximately...

A. 2°F.

B. 4°F.

C. 8°F.

D. 10°F.

ANSWER: D.

TOPIC: 193008
KNOWLEDGE: K1.21 [3.9/4.2]
QID: P1887

Sustained natural circulation requires that the heat sink is _____ in elevation than the heat source and that there is a _____ difference between the heat sink and the heat source.

A. lower; pressure

B. lower; temperature

C. higher; pressure

D. higher; temperature

ANSWER: D.

TOPIC: 193008
KNOWLEDGE: K1.21 [3.9/4.2]
QID: P1989 (B2386)

Which one of the following conditions must occur to sustain natural convection in a fluid system?

A. Subcooling of the fluid.

B. A phase change in the fluid.

C. A density change in the fluid.

D. Radiative heat transfer to the fluid.

ANSWER: C.

TOPIC: 193008
KNOWLEDGE: K1.21 [3.9/4.2]
QID: P2092

A reactor is shut down with natural circulation core cooling. Decay heat generation is equivalent to 1.0 percent of rated thermal power. Core differential temperature (ΔT) has stabilized at 16°F.

When decay heat generation decreases to 0.333 percent of rated thermal power, core ΔT will be approximately...

A. 2°F.

B. 4°F.

C. 8°F.

D. 10°F.

ANSWER: C.

TOPIC: 193008
KNOWLEDGE: K1.21 [3.9/4.2]
QID: P2392

A reactor is shut down with natural circulation core cooling. Decay heat generation is equivalent to 1.0 percent of rated thermal power. Core differential temperature (ΔT) has stabilized at 13°F.

When decay heat generation decreases to 0.5 percent of rated thermal power, core ΔT will be approximately...

A. 4°F.

B. 6°F.

C. 8°F.

D. 10°F.

ANSWER: C.

TOPIC: 193008
KNOWLEDGE: K1.21 [3.9/4.2]
QID: P2491

A reactor is shut down with natural circulation core cooling. Decay heat generation is equivalent to 1.0 percent of rated thermal power. Stable natural circulation flow rate is 800 gpm.

When decay heat generation decreases to 0.5 percent of rated thermal power, stable natural circulation flow rate will be approximately...

A. 400 gpm.

B. 565 gpm.

C. 635 gpm.

D. 696 gpm.

ANSWER: C.

TOPIC: 193008
KNOWLEDGE: K1.21 [3.9/4.2]
QID: P7447

Sustained natural circulation requires that the heat source is _____ in elevation than the heat sink; and that there is a _____ difference between the heat source and the heat sink.

A. lower; phase

B. lower; temperature

C. higher; phase

D. higher; temperature

ANSWER: B.

TOPIC: 193008
KNOWLEDGE: K1.22 [4.2/4.2]
QID: P1492

A nuclear power plant was operating at steady-state 100 percent power when a loss of offsite power occurred, resulting in a reactor trip and a loss of forced reactor coolant circulation. Thirty minutes later, reactor coolant system (RCS) hot leg temperature is greater than cold leg temperature and steam generator (SG) levels are stable.

Which one of the following combinations of parameter trends, observed 30 minutes after the trip, indicates that natural circulation is occurring? (CET = core exit thermocouple)

	RCS Hot Leg Temperature	RCS Cold Leg Temperature	SG Pressures	RCS CET Subcooling
A.	Decreasing	Stable	Stable	Increasing
B.	Increasing	Decreasing	Increasing	Decreasing
C.	Decreasing	Decreasing	Decreasing	Decreasing
D.	Increasing	Increasing	Decreasing	Increasing

ANSWER: A.

TOPIC: 193008
KNOWLEDGE: K1.22 [4.2/4.2]
QID: P1791

A nuclear power plant was operating at steady-state 100 percent power when a loss of offsite power occurred, resulting in a reactor trip and a loss of forced reactor coolant circulation. Two hours later, reactor coolant system (RCS) hot leg temperature is greater than cold leg temperature and steam generator (SG) levels are stable.

Which one of the following combinations of parameter trends, observed two hours after the trip, indicates that natural circulation is not occurring? (CET = core exit thermocouples)

	RCS Hot Leg Temperature	RCS Cold Leg Temperature	SG Pressures	RCS CET Subcooling
A.	Stable	Decreasing	Decreasing	Stable
B.	Stable	Stable	Decreasing	Decreasing
C.	Decreasing	Decreasing	Decreasing	Increasing
D.	Decreasing	Stable	Stable	Increasing

ANSWER: B.

TOPIC: 193008
KNOWLEDGE: K1.22 [4.2/4.2]
QID: P7670

A reactor had been operating at 100 percent power for 3 months when a loss of offsite power occurred, causing a reactor trip and a loss of forced reactor coolant flow. If forced reactor coolant flow is not restored, which one of the following describes the relationship between reactor coolant hot leg and cold leg temperatures one hour after the reactor trip?

A. Hot leg temperature will be greater than cold leg temperature because natural circulation cooling flow occurs in the same direction as forced reactor coolant flow.

B. Hot leg temperature will be less than cold leg temperature because natural circulation cooling flow occurs in the opposite direction as forced reactor coolant flow.

C. Hot leg temperature will be approximately the same as cold leg temperature because only the density of the reactor coolant changes during natural circulation cooling.

D. Hot leg temperature will be approximately the same as cold leg temperature because the reactor does not produce a significant amount of heat one hour after a reactor trip.

ANSWER: A.

TOPIC: 193008
KNOWLEDGE: K1.23 [3.9/4.1]
QID: P92

A reactor is shut down at normal operating temperature and pressure with all reactor coolant pumps stopped. Stable natural circulation cooling is in progress with 50°F of RCS subcooling. Which one of the following, if increased, will not affect natural circulation flow rate?

A. Reactor coolant pressure

B. Time after reactor trip

C. Feedwater flow rate

D. Steam generator pressure

ANSWER: A.

TOPIC: 193008
KNOWLEDGE: K1.23 [3.9/4.1]
QID: P293

Fully-developed natural circulation flow rate will be greatest when...

A. all reactor coolant pumps stop sequentially within 1 hour after a reactor trip.

B. all reactor coolant pumps stop at the same time as the reactor trip.

C. all reactor coolant pumps run for 1 hour after a reactor trip, and then stop.

D. only one reactor coolant pump runs for 1 hour after a reactor trip, and then stops.

ANSWER: B.

TOPIC: 193008
KNOWLEDGE: K1.23 [3.9/4.1]
QID: P392

Natural circulation flow can be enhanced by...

A. increasing the elevation of the heat source to equal that of the heat sink.

B. increasing the temperature difference between the heat source and the heat sink.

C. decreasing the temperature difference between the heat source and the heat sink.

D. decreasing the elevation difference between the heat source and the heat sink.

ANSWER: B.

TOPIC: 193008
KNOWLEDGE: K1.23 [3.9/4.1]
QID: P1493

Which one of the following will enhance natural circulation flow in the reactor coolant system?

A. Pressurizer level is decreased.

B. Steam generator level is increased.

C. Pressurizer pressure is decreased.

D. Steam generator pressure is increased.

ANSWER: B.

TOPIC: 193008
KNOWLEDGE: K1.23 [3.9/4.1]
QID: P1591

A nuclear power plant was operating at a constant power level for the last two weeks when a loss of offsite power occurred, which caused a reactor trip and a loss of forced reactor coolant flow. Natural circulation reactor coolant flow developed and stabilized 30 minutes after the trip.

Which one of the following combinations of initial reactor power and post-trip steam generator pressure will result in the highest stable natural circulation flow rate 30 minutes after the trip?

	Initial Reactor Power	Post-trip Steam Generator Pressure
A.	100 percent	1,100 psia
B.	25 percent	1,100 psia
C.	100 percent	1,000 psia
D.	25 percent	1,000 psia

ANSWER: C.

TOPIC: 193008
KNOWLEDGE: K1.23 [3.9/4.1]
QID: P1985

A nuclear power plant was operating at a constant power level for the last two weeks when a loss of offsite power occurred, which caused a reactor trip and a loss of forced reactor coolant flow. Natural circulation reactor coolant flow developed and stabilized 30 minutes after the trip.

Which one of the following combinations of initial reactor power and post-trip steam generator pressure will result in the lowest stable natural circulation flow rate 30 minutes after the trip?

	Initial Reactor Power	Post-trip Steam Generator Pressure
A.	100 percent	1,100 psia
B.	25 percent	1,100 psia
C.	100 percent	1,000 psia
D.	25 percent	1,000 psia

ANSWER: B.

TOPIC: 193008
KNOWLEDGE: K1.23 [3.9/4.1]
QID: P2492

A nuclear power plant was operating at steady-state 100 percent power when a loss of offsite power occurred, which caused a reactor trip and a complete loss of forced reactor coolant flow. Natural circulation reactor coolant flow developed and stabilized approximately 30 minutes after the trip.

Which one of the following combinations of reactor power history and post-trip steam generator pressure will result in the highest stable natural circulation flow rate?

	Days At Full Power	Post-trip Steam Generator Pressure
A.	12	1,100 psia
B.	100	1,100 psia
C.	12	1,000 psia
D.	100	1,000 psia

ANSWER: D.

TOPIC: 193008
KNOWLEDGE: K1.23 [3.9/4.1]
QID: P3292

A few minutes ago, a nuclear power plant experienced a loss of offsite power that caused a reactor trip and a loss of all reactor coolant pumps. Natural circulation flow is currently developing in the reactor coolant system (RCS).

Which one of the following operator actions will promote the development of natural circulation in the RCS?

A. Establish and maintain saturation conditions in the RCS.

B. Establish and maintain a steam bubble in the reactor vessel.

C. Establish and maintain steam generator pressure above RCS pressure.

D. Establish and maintain steam generator water level high in the normal operating range.

ANSWER: D.

TOPIC: 193008
KNOWLEDGE: K1.24 [2.7/3.1]
QID: P592

During the reflux boiling method of core cooling, steam from the reactor core is condensed in the _____ side of a steam generator and flows back into the core via the _____. (Assume the steam generators contain U-tubes.)

A. hot leg; hot leg

B. cold leg; hot leg

C. hot leg; cold leg

D. cold leg; cold leg

ANSWER: A.

TOPIC: 193008
KNOWLEDGE: K1.24 [2.7/3.1]
QID: P786

Which one of the following describes the method of core heat removal during reflux core cooling following a loss of coolant accident?

A. Convection with forced coolant flow.

B. Convection with natural circulation coolant flow.

C. Conduction with stagnant coolant flow.

D. Radiation with total core voiding.

ANSWER: B.

TOPIC: 193008
KNOWLEDGE: K1.24 [2.7/3.1]
QID: P2692

A nuclear power plant is experiencing natural circulation core cooling following a loss of coolant accident. Which one of the following, when it first occurs, marks the beginning of reflux core cooling? (Assume the steam generators contain U-tubes.)

A. Reactor core steam production results in two-phase coolant entering the hot legs and being delivered to the steam generators.

B. Hot leg steam quality is so high that the steam generators cannot fully condense it, and two-phase coolant is returned to the reactor vessel via the cold legs.

C. Steam condensation in the hot legs is unable to pass completely through the steam generators to enter the cold legs.

D. The steam generators are no longer able to condense any of the steam contained in the hot legs.

ANSWER: C.

TOPIC: 193008
KNOWLEDGE: K1.25 [3.3/3.4]
QID: P593

A reactor coolant system natural circulation cooldown is in progress with steam release from the steam generator (SG) atmospheric steam relief valves (operated in manual control). If high point voiding interrupts natural circulation, which one of the following will occur? (Assume feedwater flow rate, SG relief valve position, and core decay heat level are constant.)

A. SG level will increase and SG pressure will increase.

B. SG level will increase and SG pressure will decrease.

C. SG level will decrease and SG pressure will increase.

D. SG level will decrease and SG pressure will decrease.

ANSWER: B.

TOPIC: 193008
KNOWLEDGE: K1.25 [3.3/3.4]
QID: P793

A reactor coolant system natural circulation cooldown is in progress with steam release from the steam generator (SG) atmospheric steam relief valves (operated in manual control). Assume feedwater flow rate, SG relief valve position, and core decay heat level are constant.

If high point voiding interrupts natural circulation, SG levels will gradually _____; and core exit thermocouple indications will gradually _____.

A. decrease; increase

B. decrease; decrease

C. increase; increase

D. increase; decrease

ANSWER: C.

TOPIC: 193008
KNOWLEDGE: K1.25 [3.3/3.4]
QID: P2093

A reactor coolant system natural circulation cooldown is in progress with steam release from the steam generator (SG) atmospheric steam relief valves (operated in manual control).

If voids interrupt natural circulation, which one of the following will occur? (Assume feedwater flow rate, SG relief valve position, and decay heat level are constant.)

A. SG pressure will decrease and core exit thermocouple (CET) temperatures will increase.

B. SG pressure will decrease and CET temperatures will remain constant.

C. SG pressure will increase and CET temperatures will increase.

D. SG pressure will increase and CET temperatures will remain constant.

ANSWER: A.

TOPIC: 193008
KNOWLEDGE: K1.25 [3.3/3.4]
QID: P2493

A reactor coolant system natural circulation cooldown is in progress with steam release from the steam generator (SG) atmospheric steam relief valves (operated in manual control). Assume feedwater flow rate, SG relief valve position, and core decay heat level remain constant.

If high point voiding interrupts natural circulation, SG steam flow rate will _____ and core exit thermocouple temperatures will _____.

A. decrease; increase

B. decrease; remain constant

C. increase; increase

D. increase; remain constant

ANSWER: A.

TOPIC: 193009
KNOWLEDGE: K1.02 [2.3/2.8]
QID: P1195

A nuclear power plant is operating at steady-state 80 percent power in the middle of a fuel cycle. All control rods are fully withdrawn and in manual control. Core axial power distribution is peaked below the core midplane.

Which one of the following will cause the maximum axial peaking (or hot channel) factor to initially decrease?

A. One bank of control rods is inserted 10 percent.

B. Turbine load/reactor power is reduced by 10 percent.

C. Reactor coolant system boron concentration is reduced by 10 ppm.

D. A control rod located at the edge of the core fully inserts into the core.

ANSWER: B.

TOPIC: 193009
KNOWLEDGE: K1.02 [2.3/2.8]
QID: P7650

A reactor is operating at 80 percent power near the middle of a fuel cycle. All control rods are nearly fully withdrawn and in manual control. Core axial power distribution is peaked below the core midplane.

Which one of the following will increase the core maximum axial peaking (or hot channel) factor? (Assume <u>no</u> operator action is taken unless stated, and that main turbine load and core xenon distribution do <u>not</u> change unless stated.)

A. Turbine load/reactor power is reduced by 10 percent.

B. The controlling bank of control rods is withdrawn 4 inches.

C. Reactor coolant system boron concentration is reduced by 15 ppm.

D. A fully withdrawn control rod located at the edge of the core drops to the bottom of the core.

ANSWER: C.

TOPIC: 193009
KNOWLEDGE: K1.04 [2.3/2.7]
QID: P3295

A PWR core consists of 50,000 fuel rods; each fuel rod has an active length of 12 feet. The core is producing 1,800 MW of thermal power. If the total heat flux hot channel factor (also called the total core peaking factor) is 2.0, what is the maximum linear power density being produced in the core?

A. 4.5 kW/ft

B. 6.0 kW/ft

C. 9.0 kW/ft

D. 12.0 kW/ft

ANSWER: B.

TOPIC: 193009
KNOWLEDGE: K1.04 [2.3/2.7]
QID: P3794

A PWR core consists of 50,000 fuel rods; each fuel rod has an active length of 12 feet. The core is producing 1,800 MW of thermal power. If the total heat flux hot channel factor (also called the total core peaking factor) is 1.5, what is the maximum linear power density being produced in the core?

A. 4.5 kW/ft

B. 6.0 kW/ft

C. 9.0 kW/ft

D. 12.0 kW/ft

ANSWER: A.

TOPIC: 193009
KNOWLEDGE: K1.04 [2.3/2.7]
QID: P4949

A PWR core consists of 50,000 fuel rods; each fuel rod has an active length of 12 feet. The core is producing 1,800 MW of thermal power. If the total heat flux hot channel factor (also called the total core peaking factor) is 3.0, what is the maximum linear power density being produced in the core?

A. 4.5 kW/ft

B. 6.0 kW/ft

C. 9.0 kW/ft

D. 12.0 kW/ft

ANSWER: C.

TOPIC: 193009
KNOWLEDGE: K1.04 [2.3/2.7]
QID: P5249

A reactor is operating at 3,400 MW thermal power. The core linear power density limit is 12.2 kW/ft.

Given:

- The reactor core contains 198 fuel assemblies.
- Each fuel assembly contains 262 fuel rods, each with an active length of 12 feet.
- The highest total peaking factors measured in the core are as follows:

  Location A: 2.5
  Location B: 2.4
  Location C: 2.3
  Location D: 2.2

Which one of the following describes the operating conditions in the core relative to the linear power density limit?

A. All locations in the core are operating below the linear power density limit.

B. Location A has exceeded the linear power density limit while locations B, C, and D are operating below the limit.

C. Locations A and B have exceeded the linear power density limit while locations C and D are operating below the limit.

D. Locations A, B, and C have exceeded the linear power density limit while location D is operating below the limit.

ANSWER: D.

TOPIC: 193009
KNOWLEDGE: K1.04 [2.3/2.7]
QID: P6249 (B6247)

A reactor is operating at steady-state conditions in the power range with the following average temperatures in a core plane:

$T_{coolant}$ = 550°F
$T_{fuel\ centerline}$ = 1,680°F

Assume that the fuel rod heat transfer coefficients and reactor coolant temperatures are equal throughout the core plane. If the maximum total peaking factor in the core plane is 2.1, what is the maximum fuel centerline temperature in the core plane?

A. 2,923°F

B. 3,528°F

C. 4,078°F

D. 4,683°F

ANSWER: A.

TOPIC: 193009
KNOWLEDGE: K1.04 [2.3/2.7]
QID: P7690

A reactor is operating at 3,300 MW thermal power. The core linear power density limit is 12.4 kW/ft.

Given:

- The reactor core contains 198 fuel assemblies.
- Each fuel assembly contains 262 fuel rods, each with an active length of 12 feet.
- The highest total peaking factors measured in the core are as follows:

  Location A: 2.5
  Location B: 2.4
  Location C: 2.3
  Location D: 2.2

Which one of the following describes the operating conditions in the core relative to the linear power density limit?

A. All locations in the core are operating below the linear power density limit.

B. Location A has exceeded the linear power density limit while locations B, C, and D are operating below the limit.

C. Locations A and B have exceeded the linear power density limit while locations C and D are operating below the limit.

D. Locations A, B, and C have exceeded the linear power density limit while location D is operating below the limit.

ANSWER: C.

TOPIC: 193009
KNOWLEDGE: K1.05 [3.1/3.5]
QID: P56

What is the basis for the limit on maximum linear power density (kW/ft)?

A. To provide assurance of fuel integrity.

B. To prevent xenon-135 oscillations.

C. To allow for fuel pellet manufacturing tolerances.

D. To prevent nucleate boiling.

ANSWER: A.

TOPIC: 193009
KNOWLEDGE: K1.05 [3.1/3.5]
QID: P94

If a reactor is operated within the core thermal limits, then...

A. plant thermal efficiency is optimized.

B. fuel cladding integrity is ensured.

C. pressurized thermal shock will be prevented.

D. reactor vessel thermal stresses will be minimized.

ANSWER: B.

TOPIC: 193009
KNOWLEDGE: K1.05 [3.1/3.5]
QID: P396 (B1793)

The 2,200°F maximum fuel cladding temperature limit is imposed because...

A. 2,200°F is approximately 500°F below the fuel cladding melting temperature.

B. the rate of the zircaloy-steam reaction increases significantly at temperatures above 2,200°F.

C. any cladding temperature higher than 2,200°F correlates to a fuel centerline temperature above the fuel melting point.

D. the thermal conductivity of zircaloy decreases rapidly at temperatures above 2,200°F.

ANSWER: B.

TOPIC: 193009
KNOWLEDGE: K1.05 [3.1/3.5]
QID: P894

During normal operation, fuel cladding integrity is ensured by...

A. the primary system relief valves.

B. core bypass flow restrictions.

C. the secondary system relief valves.

D. operating within core thermal limits.

ANSWER: D.

TOPIC: 193009
KNOWLEDGE: K1.05 [3.1/3.5]
QID: P994

Maximum fuel cladding integrity is maintained by...

A. always operating below 110 percent of reactor coolant system design pressure.

B. actuation of the reactor protection system upon a reactor accident.

C. ensuring that actual heat flux is always less than critical heat flux.

D. ensuring operation above the critical heat flux during all operating conditions.

ANSWER: C.

TOPIC: 193009
KNOWLEDGE: K1.05 [3.1/3.5]
QID: P1194

Peaking (or hot channel) factors are used to establish a maximum reactor power level such that fuel pellet temperature is limited to prevent _____ of the fuel pellets; and fuel cladding temperature is limited to prevent _____ of the fuel cladding during most analyzed transients and abnormal conditions.

A. melting; melting

B. excessive expansion; melting

C. melting; excessive oxidation

D. excessive expansion; excessive oxidation

ANSWER: C.

TOPIC: 193009
KNOWLEDGE: K1.05 [3.1/3.5]
QID: P1295

Reactor thermal limits are established to...

A. ensure the integrity of the reactor fuel.

B. prevent exceeding reactor vessel mechanical limitations.

C. minimize the coolant temperature rise across the core.

D. establish control rod insertion limits.

ANSWER: A.

TOPIC: 193009
KNOWLEDGE: K1.05 [3.1/3.5]
QID: P1395 (B1893)

Thermal limits are established to protect the reactor, and thereby protect the public during nuclear power plant operations, which include...

A. normal operations only.

B. normal and abnormal operations only.

C. normal, abnormal, and postulated accident operations only.

D. normal, abnormal, postulated and unpostulated accident operations.

ANSWER: C.

TOPIC: 193009
KNOWLEDGE: K1.05 [3.1/3.5]
QID: P2194 (B2194)

Which one of the following describes the basis for the 2,200°F maximum fuel cladding temperature limit?

A. 2,200°F is approximately 500°F below the fuel cladding melting temperature.

B. The material strength of zircaloy decreases rapidly at temperatures above 2,200°F.

C. The rate of the zircaloy-water reaction increases significantly at temperatures above 2,200°F.

D. At the normal operating pressure of the reactor vessel, a cladding temperature above 2,200°F indicates that the critical heat flux has been exceeded.

ANSWER: C.

TOPIC: 193009
KNOWLEDGE: K1.05 [3.1/3.5]
QID: P2796

Given the following initial parameters for a segment of a fuel rod:

Power density = 3 kW/ft
$T_{coolant}$ = 579°F
$T_{fuel\ centerline}$ = 2,400°F

Reactor power is increased such that the following parameters now exist for the same fuel rod segment:

Power density = 5 kW/ft
$T_{coolant}$ = 590°F
$T_{fuel\ centerline}$ = ?

Assuming <u>no</u> boiling occurs and coolant flow rate is unchanged, what will be the new stable $T_{fuel\ centerline}$?

A. 3,035°F

B. 3,614°F

C. 3,625°F

D. 4,590°F

ANSWER: C.

TOPIC: 193009
KNOWLEDGE: K1.05 [3.1/3.5]
QID: P2995 (B2292)

Which one of the following describes the basis for the 2,200°F maximum fuel cladding temperature limit?

A. 2,200°F is approximately 500°F below the fuel cladding melting temperature.

B. The rate of the zircaloy-steam reaction increases significantly above 2,200°F.

C. If fuel cladding temperature reaches 2,200°F, the onset of transition boiling is imminent.

D. The differential expansion between the fuel pellets and the fuel cladding becomes excessive at temperatures greater than 2,200°F.

ANSWER: B.

TOPIC: 193009
KNOWLEDGE: K1.07 [3.1/3.5]
QID: P383 (B394)

Refer to the drawing of a fuel rod and coolant flow channel (see figure below).

Given the following initial core parameters:

Reactor power = 100 percent
$T_{coolant}$ = 500°F
$T_{fuel\ centerline}$ = 3,000°F

What would the fuel centerline temperature be if the total fuel-to-coolant thermal conductivity doubled? (Assume reactor power and $T_{coolant}$ are constant.)

A. 1,000°F

B. 1,250°F

C. 1,500°F

D. 1,750°F

ANSWER: D.

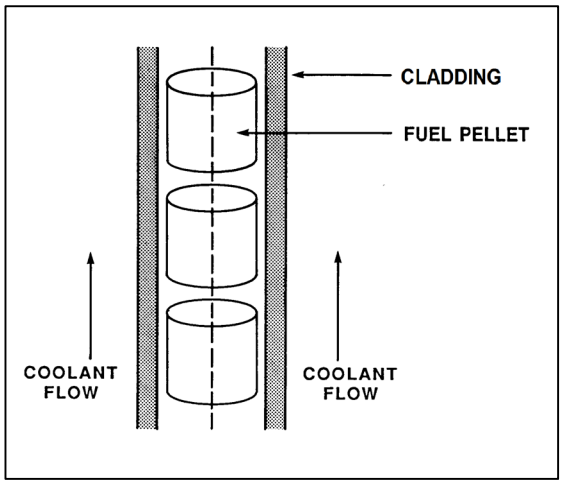

TOPIC: 193009
KNOWLEDGE: K1.07 [3.1/3.5]
QID: P394 (B396)

The pellet-to-cladding gap in fuel rod construction is designed to...

A. decrease fuel pellet densification and elongation.

B. reduce fission product gas pressure buildup.

C. increase heat transfer rate.

D. reduce internal cladding strain.

ANSWER: D.

TOPIC: 193009
KNOWLEDGE: K1.07 [3.1/3.5]
QID: P495 (B495)

Refer to the drawing of a fuel rod and coolant flow channel (see figure below).

Given the following initial core parameters:

Reactor power = 100 percent
$T_{coolant}$ = 500°F
$T_{fuel\ centerline}$ = 2,500°F

What would the fuel centerline temperature be if the total fuel-to-coolant thermal conductivity doubled? (Assume reactor power and $T_{coolant}$ are constant.)

A. 1,250°F

B. 1,300°F

C. 1,400°F

D. 1,500°F

ANSWER: D.

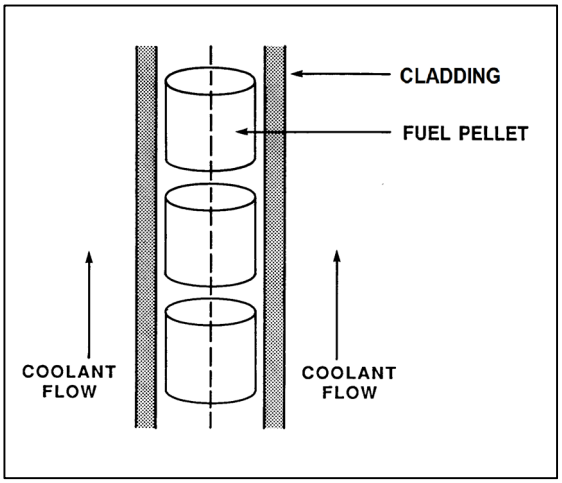

TOPIC: 193009
KNOWLEDGE: K1.07 [3.1/3.5]
QID: P1095

A reactor is operating at steady-state 80 percent power with all control rods fully withdrawn and in manual control. Compared to a 50 percent insertion of one control rod, a 50 percent insertion of a group (or bank) of control rods will cause a _____ increase in the maximum axial peaking factor and a _____ increase in the maximum radial peaking factor. (Assume reactor power remains constant.)

A. smaller; smaller

B. smaller; larger

C. larger; smaller

D. larger; larger

ANSWER: C.

TOPIC: 193009
KNOWLEDGE: K1.07 [3.1/3.5]
QID: P1594 (B1594)

Refer to the drawing of a fuel rod and coolant flow channel (see figure below).

Given the following initial core parameters:

Reactor power = 100 percent
$T_{coolant}$ = 500°F
$T_{fuel\ centerline}$ = 2,700°F

What would the fuel centerline temperature be if the total fuel-to-coolant thermal conductivity doubled? (Assume reactor power and $T_{coolant}$ are constant.)

A. 1,100°F

B. 1,350°F

C. 1,600°F

D. 1,850°F

ANSWER: C.

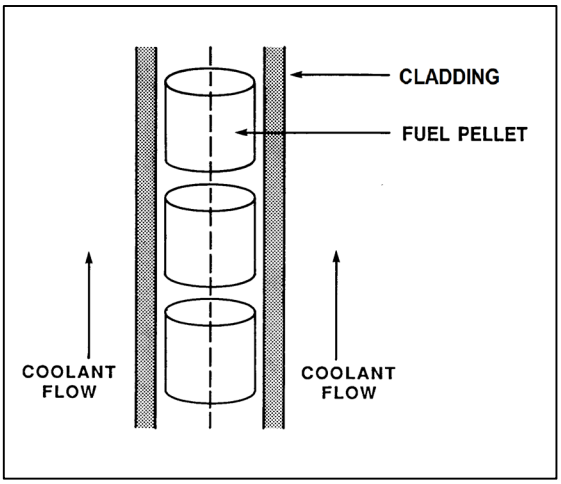

TOPIC: 193009
KNOWLEDGE: K1.07 [3.1/3.5]
QID: P1795

A reactor is operating at 80 percent power with all control rods fully withdrawn. Compared to a 50 percent insertion of a group (or bank) of control rods, a 50 percent insertion of a single control rod will cause a _____ increase in the maximum axial peaking factor and a _____ increase in the maximum radial peaking factor. (Assume reactor power remains constant.)

A. larger; larger

B. larger; smaller

C. smaller; larger

D. smaller; smaller

ANSWER: C.

TOPIC: 193009
KNOWLEDGE: K1.07 [3.1/3.5]
QID: P1894 (B1395)

Which one of the following describes the fuel-to-coolant thermal conductivity for a fuel rod at the end of a fuel cycle (EOC) when compared to the beginning of the same fuel cycle (BOC)?

A. Smaller at EOC, due to fuel pellet densification.

B. Smaller at EOC, due to contamination of fill gas with fission product gases.

C. Larger at EOC, due to reduction in gap between the fuel pellets and cladding.

D. Larger at EOC, due to a greater temperature difference between the fuel pellets and coolant.

ANSWER: C.

TOPIC: 193009
KNOWLEDGE: K1.07 [3.1/3.5]
QID: P1994 (B1995)

Refer to the drawing of a fuel rod and coolant flow channel (see figure below).

Given the following initial core parameters:

Reactor power = 80 percent
$T_{coolant}$ = 540°F
$T_{fuel\ centerline}$ = 2,540°F

What would the fuel centerline temperature be if the total fuel-to-coolant thermal conductivity doubled? (Assume reactor power and $T_{coolant}$ are constant.)

A. 1,270°F

B. 1,370°F

C. 1,440°F

D. 1,540°F

ANSWER: D.

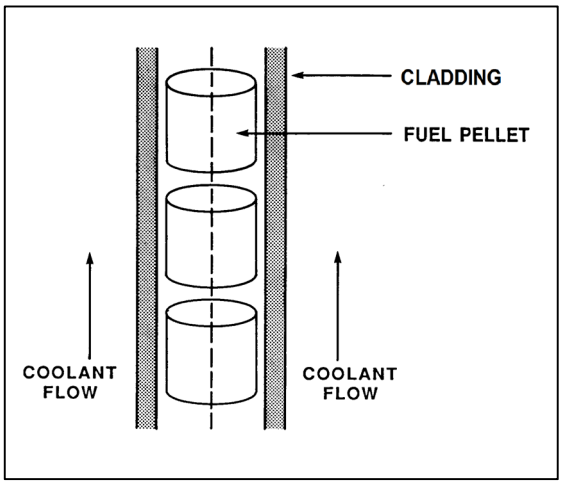

TOPIC: 193009
KNOWLEDGE: K1.07 [3.1/3.5]
QID: P2195 (B2192)

Which one of the following describes the fuel-to-coolant thermal conductivity for a fuel rod at the beginning of a fuel cycle (BOC) compared to the end of a fuel cycle (EOC)?

A. Larger at BOC, due to a higher fuel pellet density.

B. Larger at BOC, due to lower contamination of fuel rod fill gas with fission product gases.

C. Smaller at BOC, due to a larger gap between the fuel pellets and cladding.

D. Smaller at BOC, due to a smaller corrosion film on the surface of the fuel rods.

ANSWER: C.

TOPIC: 193009
KNOWLEDGE: K1.07 [3.1/3.5]
QID: P2296 (B2696)

Refer to the drawing of a fuel rod and coolant flow channel (see figure below).

Given the following initial core parameters:

Reactor power = 60 percent
$T_{coolant}$ = 560°F
$T_{fuel\ centerline}$ = 2,500°F

What would the fuel centerline temperature be if the total fuel-to-coolant thermal conductivity doubled? (Assume reactor power and $T_{coolant}$ are constant.)

A. 1,080°F

B. 1,250°F

C. 1,530°F

D. 1,810°F

ANSWER: C.

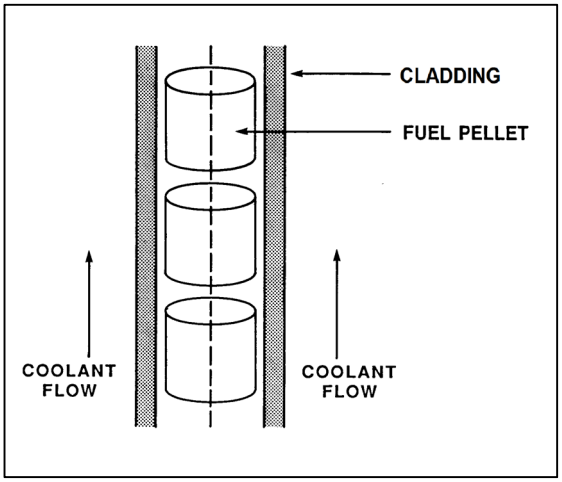

TOPIC: 193009
KNOWLEDGE: K1.07 [3.1/3.5]
QID: P2395 (B2394)

Refer to the drawing of a fuel rod and coolant flow channel (see figure below).

The reactor is shut down with the following parameter values:

$T_{coolant}$ = 320°F
$T_{fuel\ centerline}$ = 780°F

What would the fuel centerline temperature be if the total fuel-to-coolant thermal conductivity doubled? (Assume core decay heat level and $T_{coolant}$ are constant.)

A. 550°F

B. 500°F

C. 450°F

D. 400°F

ANSWER: A.

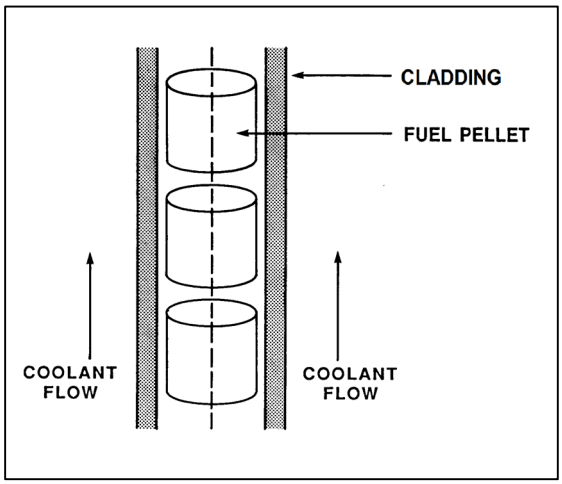

TOPIC: 193009
KNOWLEDGE: K1.07 [2.9/3.3]
QID: P3195 (B3193)

Refer to the drawing of a fuel rod and coolant flow channel (see figure below).

The reactor is shut down at the beginning of a fuel cycle with the following average parameter values:

$T_{coolant}$ = 440°F
$T_{fuel\ centerline}$ = 780°F

What will the fuel centerline temperature be at the end of the fuel cycle with the same coolant temperature and reactor decay heat conditions if the total fuel-to-coolant thermal conductivity doubles?

A. 610°F

B. 580°F

C. 550°F

D. 520°F

ANSWER: A.

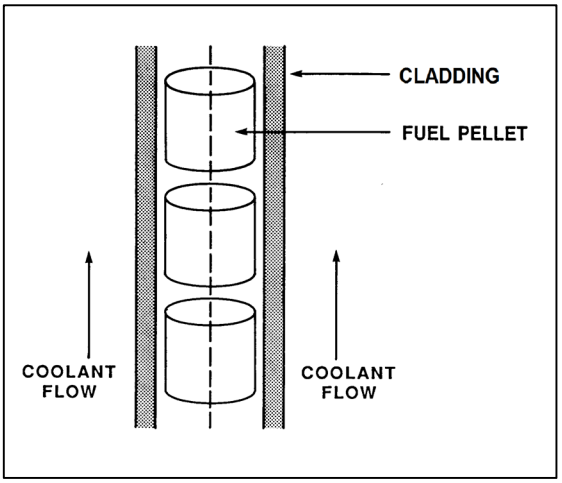

TOPIC: 193009
KNOWLEDGE: K1.07 [2.9/3.3]
QID: P3395 (B1697)

Refer to the drawing of a fuel rod and coolant flow channel (see figure below).

Given the following initial core parameters:

Reactor power = 50 percent
$T_{coolant}$ = 550°F
$T_{fuel\ centerline}$ = 2,750°F

What will the fuel centerline temperature be if the total fuel-to-coolant thermal conductivity doubles? (Assume reactor power and $T_{coolant}$ are constant.)

A. 1,100°F

B. 1,375°F

C. 1,525°F

D. 1,650°F

ANSWER: D.

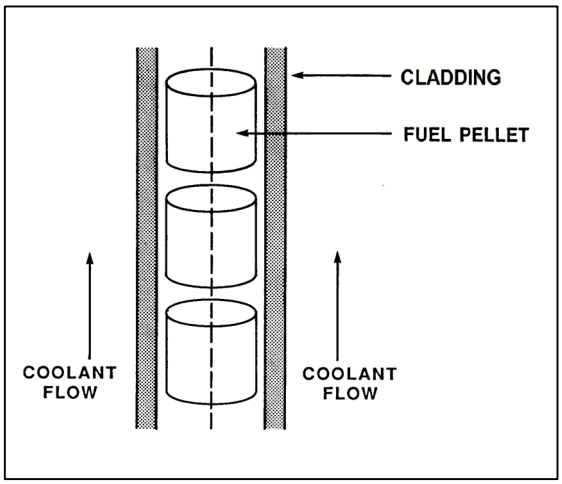

TOPIC: 193009
KNOWLEDGE: K1.07 [2.9/3.3]
QID: P3895

Refer to the drawing of a fuel rod and coolant flow channel (see figure below).

Given the following initial stable core parameters:

Reactor power = 50 percent
$T_{coolant}$ = 550°F
$T_{fuel\ centerline}$ = 2,250°F

Assume the total heat transfer coefficient and the reactor coolant temperature do not change. What will the stable fuel centerline temperature be if reactor power is increased to 75 percent?

A. 2,550°F

B. 2,800°F

C. 2,950°F

D. 3,100°F

ANSWER: D.

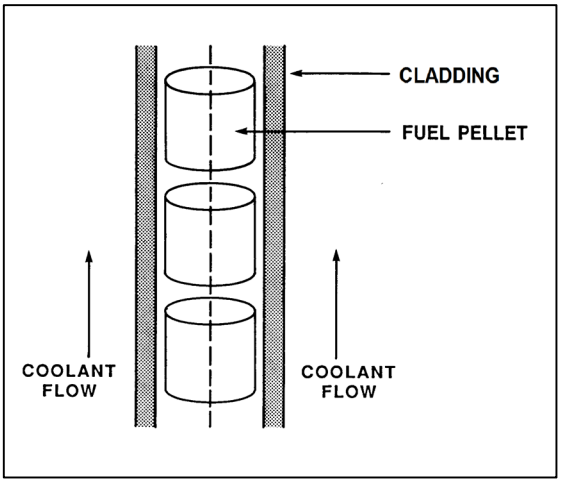

TOPIC: 193009
KNOWLEDGE: K1.07 [2.9/3.3]
QID: P6449 (B6449)

Consider a new fuel rod operating at a constant power level for several weeks. During this period, fuel pellet densification in the fuel rod causes the heat transfer rate from the fuel pellets to the cladding to _____; this change causes the average fuel temperature in the fuel rod to _____.

A. decrease; increase

B. decrease; decrease

C. increase; increase

D. increase; decrease

ANSWER: A.

TOPIC: 193009
KNOWLEDGE: K1.07 [2.9/3.3]
QID: P7630

If fuel pellet densification occurs in a fuel rod producing a constant power output, the average linear power density in the fuel rod will _____ because pellet densification causes fuel pellets to _____.

A. decrease; swell

B. decrease; shrink

C. increase; swell

D. increase; shrink

ANSWER: D.

TOPIC: 193010
KNOWLEDGE: K1.01 [2.8/3.2]
QID: P97 (B899)

The pressure stress on a reactor vessel wall is...

A. tensile across the entire wall.

B. compressive across the entire wall.

C. tensile on the inner wall, compressive on the outer wall.

D. compressive on the inner wall, tensile on the outer wall.

ANSWER: A.

TOPIC: 193010
KNOWLEDGE: K1.01 [2.8/3.2]
QID: P296

Brittle fracture is the fragmentation of metal resulting from the application of _____ stress at relatively _____ temperatures.

A. compressive; high

B. compressive; low

C. tensile; high

D. tensile; low

ANSWER: D.

TOPIC: 193010
KNOWLEDGE: K1.01 [2.8/3.2]
QID: P397 (B398)

The conditions for brittle fracture of the reactor vessel are most closely approached at…

A. 400°F, 10 psig.

B. 400°F, 400 psig.

C. 120°F, 10 psig.

D. 120°F, 400 psig.

ANSWER: D.

TOPIC: 193010
KNOWLEDGE: K1.01 [2.8/3.2]
QID: P497 (B499)

Which one of the following comparisons will result in a <u>higher</u> probability for brittle fracture of the reactor vessel?

A. A high gamma flux in the reactor rather than a high neutron flux.

B. A high oxygen content in the reactor coolant rather than a low oxygen content.

C. A high material strength in the reactor vessel rather than a high material ductility.

D. A rapid 100°F reactor cooldown at a high temperature rather than at a low temperature.

ANSWER: C.

TOPIC: 193010
KNOWLEDGE: K1.01 [2.8/3.2]
QID: P1200

Which one of the following reduces the probability of brittle fracture of the reactor vessel?

A. The presence of a preexisting flaw

B. The presence of a tensile stress

C. Operation at low temperatures

D. Small heatup and cooldown rates

ANSWER: D.

TOPIC: 193010
KNOWLEDGE: K1.01 [2.8/3.2]
QID: P1296

Which one of the following comparisons increases the probability of brittle fracture of a pressure vessel wall?

A. A high temperature rather than a low temperature.

B. A tensile stress rather than a compressive stress.

C. Performing a 100°F/hour heatup rather than a 100°F/hour cooldown.

D. Fabricating the vessel from stainless steel rather than carbon steel.

ANSWER: B.

TOPIC: 193010
KNOWLEDGE: K1.01 [2.8/3.2]
QID: P1396

Which one of the following statements describes the relationship between brittle fracture and the nil-ductility transition temperature?

A. Operation below the nil-ductility transition temperature will result in brittle fracture.

B. Operation above the nil-ductility transition temperature will result in brittle fracture.

C. Operation below the nil-ductility transition temperature will increase the probability of brittle fracture.

D. Operation above the nil-ductility transition temperature will increase the probability of brittle fracture.

ANSWER: C.

TOPIC: 193010
KNOWLEDGE: K1.01 [2.8/3.2]
QID: P1597 (B1899)

Which one of the following comparisons increases the probability for brittle fracture of a reactor vessel wall?

A. Using a vessel fabricated from stainless steel rather than carbon steel.

B. Subjecting the vessel wall to a compressive stress rather than a tensile stress.

C. A high reactor coolant temperature rather than a low reactor coolant temperature.

D. Performing a 100°F/hr cooldown of the reactor rather than a 100°F/hr heatup.

ANSWER: D.

TOPIC: 193010
KNOWLEDGE: K1.01 [2.8/3.2]
QID: P1696 (B2700)

Which one of the following comparisons increases the probability of brittle fracture for a reactor vessel wall?

A. Performing a 50°F/hr cooldown at 1,600 psia rather than a 50°F/hr cooldown at 1,200 psia.

B. A compressive stress across the vessel wall rather than a tensile stress.

C. A high reactor coolant temperature rather than a low reactor coolant temperature.

D. Changing the reactor vessel manufacturing process to increase toughness while maintaining the same yield strength.

ANSWER: A.

TOPIC: 193010
KNOWLEDGE: K1.01 [2.8/3.2]
QID: P1796

Brittle fracture of the reactor vessel wall is <u>least likely</u> to occur at...

A. 120°F; 2,200 psig.

B. 120°F; 400 psig.

C. 400°F; 2,200 psig.

D. 400°F; 400 psig.

ANSWER: D.

TOPIC: 193010
KNOWLEDGE: K1.01 [2.8/3.2]
QID: P1896 (B1299)

Brittle fracture of the reactor vessel (RV) is most likely to occur during a reactor _____ when RV temperature is _____ the nil-ductility transition temperature.

A. cooldown; above

B. heatup; above

C. cooldown; below

D. heatup; below

ANSWER: C.

TOPIC: 193010
KNOWLEDGE: K1.01 [2.8/3.2]
QID: P2096 (B2099)

Which one of the following will normally prevent brittle fracture failure of a reactor vessel?

A. Manufacturing the reactor vessel from low carbon steel.

B. Maintaining reactor vessel pressure below the maximum design limit.

C. Operating above the nil-ductility transition temperature.

D. Maintaining the number of reactor vessel heatup/cooldown cycles within limits.

ANSWER: C.

TOPIC: 193010
KNOWLEDGE: K1.01 [2.8/3.2]
QID: P2196

Brittle fracture of the reactor vessel (RV) is least likely to occur during a _____ of the RV when RV temperature is _____ the nil-ductility transition temperature.

A. cooldown; above

B. heatup; above

C. cooldown; below

D. heatup; below

ANSWER: B.

TOPIC: 193010
KNOWLEDGE: K1.01 [2.8/3.2]
QID: P2496 (B2499)

Brittle fracture of a low-carbon steel is more likely to occur when the temperature of the steel is _____ the nil-ductility transition temperature; and will normally occur when the applied stress is _____ the steel's yield strength (or yield stress) at room temperature.

A. less than; less than

B. less than; greater than

C. greater than; less than

D. greater than; greater than

ANSWER: A.

TOPIC: 193010
KNOWLEDGE: K1.01 [2.8/3.2]
QID: P2497 (B2500)

Which one of the following comparisons will result in a higher probability for brittle fracture of a reactor vessel?

A. A reactor coolant pH of 8.5 rather than 9.0.

B. A high oxygen content in the reactor coolant rather than a low oxygen content.

C. A 50°F/hr cooldown rather than a 100°F/hr heatup.

D. A high gamma flux in the reactor rather than a high neutron flux.

ANSWER: C.

TOPIC: 193010
KNOWLEDGE: K1.01 [2.8/3.2]
QID: P2896

Which one of the following comparisons will result in a lower probability of brittle fracture failure of the reactor vessel?

A. A reactor coolant pH of 9.0 rather than 8.5.

B. A low oxygen content in the reactor coolant rather than a high oxygen content.

C. A 50°F/hr cooldown rather than a 100°F/hr heatup.

D. A high gamma flux in the reactor rather than a high neutron flux.

ANSWER: D.

TOPIC: 193010
KNOWLEDGE: K1.02 [2.4/2.5]
QID: P98

The nil-ductility transition temperature for a reactor vessel is the temperature...

A. below which the probability of brittle fracture significantly increases.

B. determined by fracture mechanics to be equivalent to the reference transition temperature.

C. determined by Charpy V-notch test to be equivalent to the reference transition temperature.

D. below which the yield stress of the metal is inversely proportional to Young's modulus of elasticity.

ANSWER: A.

TOPIC: 193010
KNOWLEDGE: K1.02 [2.4/2.5]
QID: P597 (B2699)

The nil-ductility transition temperature of the reactor vessel (RV) is the temperature...

A. above which the RV metal will elastically deform as RV pressure decreases.

B. above which the RV metal loses its ability to elastically deform as RV pressure increases.

C. below which the RV metal will elastically deform as RV pressure decreases.

D. below which the RV metal loses its ability to elastically deform as RV pressure increases.

ANSWER: D.

TOPIC: 193010
KNOWLEDGE: K1.02 [2.4/2.5]
QID: P697 (B1500)

The nil-ductility transition temperature is the temperature above which...

A. a large compressive stress can result in brittle fracture.

B. a metal exhibits more ductile tendencies.

C. the probability of brittle fracture increases.

D. no appreciable deformation occurs prior to failure.

ANSWER: B.

TOPIC: 193010
KNOWLEDGE: K1.02 [2.4/2.5]
QID: P996 (B2299)

The nil-ductility transition temperature is that temperature...

A. below which vessel failure is imminent.

B. above which vessel failure is imminent.

C. below which the probability of brittle fracture significantly increases.

D. above which the probability of brittle fracture significantly increases.

ANSWER: C.

TOPIC: 193010
KNOWLEDGE: K1.04 [3.3/3.7]
QID: P96 (B100)

The likelihood of brittle fracture failure of the reactor vessel is reduced by...

A. reducing gamma flux exposure.

B. reducing vessel temperature.

C. reducing vessel pressure.

D. increasing vessel age.

ANSWER: C.

TOPIC: 193010
KNOWLEDGE: K1.04 [3.3/3.7]
QID: P142

Which one of the following reactor coolant system (RCS) conditions is <u>least</u> effective in preventing brittle fracture of the reactor vessel?

A. Operating within prescribed RCS heatup and cooldown rate limitations.

B. Operating with RCS temperature greater than the nil-ductility transition temperature.

C. Operating with low RCS pressure when RCS temperature is low.

D. Operating with a ramped RCS temperature as reactor power level increases.

ANSWER: D.

TOPIC: 193010
KNOWLEDGE: K1.04 [3.3/3.7]
QID: P297

Why are reactor coolant system cooldown rate limitations established?

A. Prevent excessive reactivity additions.

B. Prevent brittle fracture of the reactor vessel.

C. Prevent excessive reactor coolant system subcooling.

D. Prevent impurities from precipitating out of solution in the reactor vessel.

ANSWER: B.

TOPIC: 193010
KNOWLEDGE: K1.04 [3.3/3.7]
QID: P300

The thermal stress experienced by the reactor vessel during a reactor coolant system heatup is...

A. compressive at the inner wall and tensile at the outer wall of the vessel.

B. tensile at the inner wall and compressive at the outer wall of the vessel.

C. tensile across the entire vessel wall.

D. compressive across the entire vessel wall.

ANSWER: A.

TOPIC: 193010
KNOWLEDGE: K1.04 [3.3/3.7]
QID: P399 (B399)

The total stress on the reactor vessel inner wall is greater during cooldown than heatup because...

A. thermal stress during heatup totally offsets pressure stress at the inner wall.

B. both pressure stress and thermal stress are tensile at the inner wall during cooldown.

C. the tensile thermal stress at the inner wall is greater in magnitude than the compressive pressure stress at the same location during cooldown.

D. thermal stress during both cooldown and heatup is tensile at the inner wall, but the thermal stress during cooldown is greater in magnitude.

ANSWER: B.

TOPIC: 193010
KNOWLEDGE: K1.04 [3.3/3.7]
QID: P898

The likelihood of brittle fracture failure of the reactor vessel is reduced by...

A. increasing reactor vessel age.

B. reducing reactor vessel pressure.

C. reducing reactor vessel temperature.

D. increasing the reactor vessel gamma flux exposure.

ANSWER: B.

TOPIC: 193010
KNOWLEDGE: K1.04 [3.3/3.7]
QID: P1098

Which one of the following will increase the compressive stress on the outside surface of the reactor vessel wall?

A. Neutron irradiation

B. Gamma irradiation

C. Reactor coolant system cooldown

D. Reactor coolant system heatup

ANSWER: C.

TOPIC: 193010
KNOWLEDGE: K1.04 [3.3/3.7]
QID: P1298

Which one of the following applies a compressive stress to the inner wall of the reactor vessel during a reactor coolant system heatup?

A. Embrittlement stress

B. Yield stress

C. Pressure stress

D. Thermal stress

ANSWER: D.

TOPIC: 193010
KNOWLEDGE: K1.04 [3.3/3.7]
QID: P1397

Which one of the following is the most limiting component for establishing reactor coolant system heatup/cooldown rate limits?

A. Pressurizer

B. Reactor vessel

C. Fuel rod

D. Steam generator

ANSWER: B.

TOPIC: 193010
KNOWLEDGE: K1.04 [3.3/3.7]
QID: P1598

Which one of the following stresses is compressive on the outer wall of the reactor vessel during a reactor coolant system cooldown?

A. Yield stress

B. Thermal stress

C. Pressure stress

D. Embrittlement stress

ANSWER: B.

TOPIC: 193010
KNOWLEDGE: K1.04 [3.3/3.7]
QID: P1897 (B300)

Which one of the following will apply a compressive stress to the outside wall of the reactor vessel?

A. Decreasing reactor coolant system pressure.

B. Increasing reactor coolant system pressure.

C. Performing a reactor coolant system cooldown.

D. Performing a reactor coolant system heatup.

ANSWER: C.

TOPIC: 193010
KNOWLEDGE: K1.04 [3.3/3.7]
QID: P2397 (B2399)

Reactor coolant system pressure-temperature limit curves are derived by using a conservative value for the reactor vessel nil-ductility transition temperature (NDTT).

Early in core life, the conservative value of NDTT is _____ than actual NDTT; the actual NDTT is verified periodically over core life by _____.

A. higher; removing and testing irradiated specimens of reactor vessel material

B. higher; in-service inspection and analysis of the reactor vessel wall

C. lower; removing and testing irradiated specimens of reactor vessel material

D. lower; in-service inspection and analysis of the reactor vessel wall

ANSWER: A.

TOPIC: 193010
KNOWLEDGE: K1.04 [3.3/3.7]
QID: P2998

Which one of the following operating limitations is designed to prevent brittle fracture of the reactor vessel and/or the reactor coolant system (RCS)?

A. Maximum setpoint for the pressurizer safety valves.

B. Maximum differential pressure between the RCS and the steam generators.

C. Maximum RCS pressure versus RCS temperature for a given RCS heatup rate.

D. Maximum differential temperature between the RCS and the pressurizer.

ANSWER: C.

TOPIC: 193010
KNOWLEDGE: K1.04 [3.3/3.7]
QID: P3698 (B3700)

A reactor is shutdown with the shutdown cooling system maintaining reactor coolant temperature at 240°F immediately following an uncontrolled rapid cooldown from 500°F. If reactor coolant temperature is held constant at 240°F, which one of the following describes the change in tensile stress on the inner wall of the reactor vessel (RV) over the next few hours?

A. Decreases, because the temperature gradient across the RV wall will decrease.

B. Increases, because the temperature gradient across the RV wall will decrease.

C. Decreases, because the inner RV wall temperature will approach the nil-ductility transition temperature.

D. Increases, because the inner RV wall temperature will approach the nil-ductility transition temperature.

ANSWER: A.

TOPIC: 193010
KNOWLEDGE: K1.05 [2.9/3.0]
QID: P95

Fast neutron irradiation of the reactor vessel results in _____ stresses within the vessel metal, thereby _____ the nil-ductility transition temperature.

A. decreased; increasing

B. decreased; decreasing

C. increased; increasing

D. increased; decreasing

ANSWER: C.

TOPIC: 193010
KNOWLEDGE: K1.05 [2.9/3.0]
QID: P143

Fast neutron irradiation adversely affects the reactor vessel primarily by causing...

A. metal embrittlement.

B. brittle fracture.

C. flaw initiation.

D. flaw propagation.

ANSWER: A.

TOPIC: 193010
KNOWLEDGE: K1.05 [2.9/3.0]
QID: P298 (B599)

Prolonged exposure of a reactor vessel to a fast neutron flux will cause the nil-ductility transition temperature to...

A. decrease, due to the propagation of existing flaws.

B. increase, due to the propagation of existing flaws.

C. decrease, due to changes in the material properties of the vessel wall.

D. increase, due to changes in the material properties of the vessel wall.

ANSWER: D.

TOPIC: 193010
KNOWLEDGE: K1.05 [2.9/3.0]
QID: P398 (B400)

The likelihood of reactor vessel brittle fracture is <u>decreased</u> by minimizing...

A. the oxygen content in the reactor coolant.

B. operation at high reactor coolant temperatures.

C. the time taken to cool down the reactor.

D. the amount of copper contained in the metal used for the reactor vessel.

ANSWER: D.

TOPIC: 193010
KNOWLEDGE: K1.05 [2.9/3.0]
QID: P499 (B500)

Which one of the following types of radiation most significantly reduces the ductility of a reactor vessel?

A. Beta

B. Thermal neutrons

C. Gamma

D. Fast neutrons

ANSWER: D.

TOPIC: 193010
KNOWLEDGE: K1.05 [2.9/3.0]
QID: P899 (B1900)

After several years of operation, the maximum allowable stress to the reactor vessel is more limited by the inner wall than the outer wall because...

A. the inner wall has a smaller surface area than the outer wall.

B. the inner wall experiences more tensile stress than the outer wall.

C. the inner wall operates at a higher temperature than the outer wall.

D. the inner wall experiences more neutron-induced embrittlement than the outer wall.

ANSWER: D.

TOPIC: 193010
KNOWLEDGE: K1.05 [2.9/3.0]
QID: P998 (B1999)

Prolonged exposure to _____ will cause the nil-ductility transition temperature of the reactor vessel to _____.

A. neutron radiation; increase

B. neutron radiation; decrease

C. normal operating pressure; increase

D. normal operating pressure; decrease

ANSWER: A.

TOPIC: 193010
KNOWLEDGE: K1.05 [2.9/3.0]
QID: P1100 (B1100)

Two identical reactors have been in operation for the last 10 years. Reactor A has experienced 40 heatup/cooldown cycles with an average capacity factor of 50 percent. Reactor B has experienced 30 heatup/cooldown cycles with an average capacity factor of 60 percent.

Which reactor will have the <u>lower</u> reactor vessel nil-ductility transition temperature, and why?

A. Reactor A, due to the lower average capacity factor.

B. Reactor A, due to the greater number of heatup/cooldown cycles.

C. Reactor B, due to the higher average capacity factor.

D. Reactor B, due to the fewer number of heatup/cooldown cycles.

ANSWER: A.

TOPIC: 193010
KNOWLEDGE: K1.05 [2.9/3.0]
QID: P1498

The two factors that have the greatest effect on the nil-ductility transition temperature of the reactor vessel over its life are...

A. thermal neutron flux and vessel copper content.

B. thermal neutron flux and vessel carbon content.

C. fast neutron flux and vessel copper content.

D. fast neutron flux and vessel carbon content.

ANSWER: C.

TOPIC: 193010
KNOWLEDGE: K1.05 [2.9/3.0]
QID: P1699 (B1800)

Two identical reactors have been in operation for the last 10 years. Reactor A has experienced 30 heatup/cooldown cycles with an average capacity factor of 60 percent. Reactor B has experienced 40 heatup/cooldown cycles with an average capacity factor of 50 percent.

Which reactor will have the <u>lower</u> reactor vessel nil-ductility transition temperature, and why?

A. Reactor A, due to the higher average capacity factor.

B. Reactor A, due to the fewer number of heatup/cooldown cycles.

C. Reactor B, due to the lower average capacity factor.

D. Reactor B, due to the greater number of heatup/cooldown cycles.

ANSWER: C.

TOPIC: 193010
KNOWLEDGE: K1.05 [2.9/3.0]
QID: P1898 (B1200)

Which one of the following is the major contributor to embrittlement of a reactor vessel?

A. High-energy fission fragments

B. High operating temperature

C. High-energy gamma radiation

D. High-energy neutron radiation

ANSWER: D.

TOPIC: 193010
KNOWLEDGE: K1.05 [2.9/3.0]
QID: P1997 (B299)

Which one of the following describes the effect of fast neutron irradiation on a reactor vessel?

A. Increased fatigue crack growth rate

B. Increased plastic deformation prior to failure

C. Increased ductility

D. Increased nil-ductility transition temperature

ANSWER: D.

TOPIC: 193010
KNOWLEDGE: K1.05 [2.9/3.0]
QID: P2098 (B2100)

Two identical reactors have been in operation for the last 10 years. Reactor A has experienced 30 heatup/cooldown cycles and has an average capacity factor of 60 percent. Reactor B has experienced 40 heatup/cooldown cycles and has an average capacity factor of 50 percent.

Which reactor will have the <u>higher</u> reactor vessel nil-ductility transition temperature, and why?

A. Reactor A, due to the fewer number of heatup/cooldown cycles.

B. Reactor A, due to the higher average capacity factor.

C. Reactor B, due to the greater number of heatup/cooldown cycles.

D. Reactor B, due to the lower average capacity factor.

ANSWER: B.

TOPIC: 193010
KNOWLEDGE: K1.05 [2.9/3.0]
QID: P2298

Two identical reactors have been in operation for the last 10 years. Reactor A has experienced 40 heatup/cooldown cycles and has an average capacity factor of 50 percent. Reactor B has experienced 30 heatup/cooldown cycles and has an average capacity factor of 60 percent.

Which reactor will have the <u>higher</u> reactor vessel nil-ductility transition temperature?

A. Reactor A, due to the greater number of heatup/cooldown cycles.

B. Reactor A, due to the lower average capacity factor.

C. Reactor B, due to the fewer number of heatup/cooldown cycles.

D. Reactor B, due to the higher average capacity factor.

ANSWER: D.

TOPIC: 193010
KNOWLEDGE: K1.05 [2.9/3.0]
QID: P2599 (B2600)

Two identical reactors are currently shut down for refueling. Reactor A has an average lifetime capacity factor of 60 percent and has been operating for 15 years. Reactor B has an average lifetime capacity factor of 75 percent and has been operating for 12 years.

Which reactor, if any, will have the lower reactor vessel nil-ductility transition temperature, and why?

A. Reactor A, due to the lower average lifetime capacity factor.

B. Reactor B, due to the higher average lifetime capacity factor.

C. Both reactors will have approximately the same nil-ductility transition temperature because each reactor has produced approximately the same number of fissions.

D. Both reactors will have approximately the same nil-ductility transition temperature because fast neutron irradiation in a shutdown reactor is not significant.

ANSWER: C.

TOPIC: 193010
KNOWLEDGE: K1.05 [2.9/3.0]
QID: P2698 (B3000)

Two identical reactors are currently shut down for refueling. Reactor A has achieved an average lifetime capacity factor of 60 percent while operating for 15 years. Reactor B has achieved an average lifetime capacity factor of 60 percent while operating for 12 years.

Which reactor, if any, will have the lower reactor vessel nil-ductility transition temperature, and why?

A. Reactor A, because it has produced more total fissions.

B. Reactor B, because it has produced less total fissions.

C. Both reactors will have approximately the same nil-ductility transition temperature because they have equal average lifetime power capacities.

D. Both reactors will have approximately the same nil-ductility transition temperature because the fission rate in a shutdown reactor is not significant.

ANSWER: B.

TOPIC: 193010
KNOWLEDGE: K1.05 [2.9/3.0]
QID: P2799 (B2800)

Two identical reactors have been in operation for the last 10 years. Reactor A has experienced 30 heatup/cooldown cycles and has an average capacity factor of 60 percent. Reactor B has experienced 20 heatup/cooldown cycles and has an average capacity factor of 80 percent.

Which reactor will have the higher reactor vessel nil-ductility transition temperature, and why?

A. Reactor A, due to the lower average capacity factor.

B. Reactor A, due to the greater number of heatup/cooldown cycles.

C. Reactor B, due to the higher average capacity factor.

D. Reactor B, due to the fewer number of heatup/cooldown cycles.

ANSWER: C.

TOPIC: 193010
KNOWLEDGE: K1.05 [2.9/3.0]
QID: P3197 (B3200)

A reactor is shut down for refueling following 18 months of operation at an average power level of 85 percent. During the shutdown, a reactor vessel metal specimen was removed from the reactor vessel for testing. The testing determined that the nil-ductility transition (NDT) temperature of the specimen decreased from 44°F to 42°F since the previous refueling shutdown.

Which one of the following conclusions is warranted?

A. The test results are credible and the reactor vessel is more likely to experience brittle fracture now than after the previous refueling shutdown.

B. The test results are credible and the reactor vessel is less likely to experience brittle fracture now than after the previous refueling shutdown.

C. The test results are questionable because the specimen NDT temperature would not decrease during the described 18-month period of operation.

D. The test results are questionable because the specimen NDT temperature would decrease by more than 2°F during the described 18-month period of operation.

ANSWER: C.

TOPIC: 193010
KNOWLEDGE: K1.05 [2.9/3.0]
QID: P3297 (B3300)

A reactor is shut down for refueling following 18 months of operation at an average power level of 85 percent. During the shutdown, a reactor vessel metal specimen was removed from the reactor vessel for testing. The testing determined that the nil-ductility transition (NDT) temperature of the specimen increased from 42°F to 44°F since the previous refueling shutdown.

Which one of the following conclusions is warranted?

A. The test results are credible and the reactor vessel is <u>more</u> susceptible to brittle fracture now than after the previous refueling shutdown.

B. The test results are credible and the reactor vessel is <u>less</u> susceptible to brittle fracture now than after the previous refueling shutdown.

C. The test results are questionable because the vessel NDT temperature would <u>not</u> increase during the described 18-month period of operation.

D. The test results are questionable because the vessel NDT temperature would increase by <u>at least</u> 10°F during the described 18-month period of operation.

ANSWER: A.

TOPIC: 193010
KNOWLEDGE: K1.05 [2.9/3.0]
QID: P3598 (B3600)

A reactor is shut down for refueling following 18 months of operation at an average power level of 85 percent. During the shutdown, a reactor vessel metal specimen is removed from the reactor vessel for testing. The testing indicates that the nil-ductility transition (NDT) temperature of the specimen has decreased from 44°F to 32°F since the previous refueling shutdown.

Which one of the following conclusions is warranted?

A. The test results are credible and the reactor vessel is <u>more</u> likely to experience brittle fracture now than after the previous refueling shutdown.

B. The test results are credible and the reactor vessel is <u>less</u> likely to experience brittle fracture now than after the previous refueling shutdown.

C. The test results are questionable because the actual specimen NDT temperature would <u>not</u> decrease during the described 18-month period of operation.

D. The test results are questionable because the actual specimen NDT temperature would decrease by much <u>less</u> than indicated by the test results.

ANSWER: C.

TOPIC: 193010
KNOWLEDGE: K1.05 [2.9/3.0]
QID: P3898 (B3900)

Two identical reactors are currently shut down for refueling. Reactor A has an average lifetime capacity factor of 90 percent and has been operating for 10 years. Reactor B has an average lifetime capacity factor of 80 percent and has been operating for 15 years.

Which reactor will have the <u>higher</u> reactor vessel nil-ductility transition temperature, and why?

A. Reactor A, because it has the higher average lifetime capacity factor.

B. Reactor B, because it has the lower average lifetime capacity factor.

C. Reactor A, because it has produced significantly less fissions.

D. Reactor B, because it has produced significantly more fissions.

ANSWER: D.

TOPIC: 193010
KNOWLEDGE: K1.05 [2.9/3.0]
QID: P4250 (B4250)

A reactor is shut down for refueling following 18 months of operation at an average power level of 85 percent. During the shutdown, a reactor vessel metal specimen was removed from the reactor vessel for testing. The tests determined that the nil-ductility transition (NDT) temperature of the specimen increased from 42°F to 72°F since the previous refueling shutdown.

Which one of the following conclusions is warranted?

A. The test results are credible and the reactor vessel is <u>more</u> likely to experience brittle fracture now than after the previous refueling shutdown.

B. The test results are credible and the reactor vessel is <u>less</u> likely to experience brittle fracture now than after the previous refueling shutdown.

C. The test results are questionable because the specimen NDT temperature would <u>not</u> increase during the described 18-month period of operation.

D. The test results are questionable because the specimen NDT temperature would increase by <u>less</u> than indicated during the described 18-month period of operation.

ANSWER: D.

TOPIC: 193010
KNOWLEDGE: K1.05 [2.9/3.0]
QID: P4450 (B4450)

A reactor is shut down for refueling. During the shutdown, a reactor vessel metal specimen was removed from the reactor vessel for testing. The specimen was last tested six years ago and then returned to its original location in the reactor vessel. During the subsequent six years, the reactor has completed several 18 month fuel cycles with an average power level of 85 percent.

The tests determined that the nil-ductility transition (NDT) temperature of the specimen has remained unchanged at 44°F since it was last tested. Which one of the following conclusions is warranted?

A. The test results are credible; however, the reactor vessel is more susceptible to brittle fracture now than six years ago.

B. The test results are credible; however, the reactor vessel is less susceptible to brittle fracture now than six years ago.

C. The test results are questionable because the specimen NDT temperature should have increased since it was last tested.

D. The test results are questionable because the specimen NDT temperature should have decreased since it was last tested.

ANSWER: C.

TOPIC: 193010
KNOWLEDGE: K1.05 [2.9/3.0]
QID: P4650 (B4650)

Two identical reactors are currently shut down for refueling. Reactor A has achieved an average lifetime capacity factor of 60 percent while operating for 12 years. Reactor B has achieved an average lifetime capacity factor of 60 percent while operating for 15 years.

Which reactor, if any, will have the lower reactor vessel nil-ductility transition temperature?

A. Reactor A, because it has produced less total fissions.

B. Reactor B, because it has produced more total fissions.

C. Both reactors will have approximately the same nil-ductility transition temperature because they have equal average lifetime power capacities.

D. Both reactors will have approximately the same nil-ductility transition temperature because the fission rate in a shutdown reactor is not significant.

ANSWER: A.

TOPIC: 193010
KNOWLEDGE: K1.05 [2.9/3.0]
QID: P5550 (B5550)

Two identical reactors are currently shut down for refueling. Reactor A has an average lifetime capacity factor of 90 percent and has been operating for 24 years. Reactor B has an average lifetime capacity factor of 72 percent and has been operating for 30 years.

Which reactor, if any, will have the lower reactor vessel nil-ductility transition temperature?

A. Reactor A, because it has produced more total fissions.

B. Reactor B, because it has produced less total fissions.

C. Both reactors will have approximately the same nil-ductility transition temperature because fast neutron irradiation in a shutdown reactor is not significant.

D. Both reactors will have approximately the same nil-ductility transition temperature because each reactor has produced approximately the same number of fissions.

ANSWER: D.

TOPIC: 193010
KNOWLEDGE: K1.05 [2.9/3.0]
QID: P6350 (B6350)

Which one of the following comparisons yields a higher probability for brittle fracture of a reactor vessel?

A. A high fast neutron flux in the reactor rather than a high gamma flux.

B. A high material ductility of the reactor vessel rather than a high material strength.

C. A rapid 100°F reactor heatup at a high temperature rather than at a low temperature.

D. A rapid 100°F reactor cooldown at a high temperature rather than at a low temperature.

ANSWER: A.

TOPIC: 193010
KNOWLEDGE: K1.05 [2.9/3.0]
QID: P6950 (B6950)

Two identical reactors are currently shut down for refueling. Reactor A has an average lifetime capacity factor of 90 percent and has been operating for 16 years. Reactor B has an average lifetime capacity factor of 80 percent and has been operating for 18 years.

Which reactor, if any, will have the lower reactor vessel nil-ductility transition temperature, and why?

A. Reactor A, due to the higher average lifetime capacity factor.

B. Reactor B, due to the lower average lifetime capacity factor.

C. Both reactors will have approximately the same nil-ductility transition temperature because each reactor has produced approximately the same number of fissions.

D. Both reactors will have approximately the same nil-ductility transition temperature because fast neutron irradiation in a shutdown reactor is not significant.

ANSWER: C.

TOPIC: 193010
KNOWLEDGE: K1.05 [2.9/3.0]
QID: P7640 (B7640)

Which one of the following comparisons yields a lower probability for brittle fracture of a reactor vessel?

A. A high gamma flux in the reactor rather than a high fast neutron flux.

B. A high material strength of the reactor vessel rather than a high material ductility.

C. A rapid 100°F reactor heatup at a low temperature rather than at a high temperature.

D. A rapid 100°F reactor cooldown at a low temperature rather than at a high temperature.

ANSWER: A.

TOPIC: 193010
KNOWLEDGE: K1.06 [3.6/3.8]
QID: P99

A nuclear power plant is shut down with the reactor coolant system at 1,200 psia and 350°F. Which one of the following would be most likely to cause a pressurized thermal shock to the reactor vessel?

A. A rapid depressurization followed by a rapid heatup.

B. A rapid depressurization followed by a rapid cooldown.

C. A rapid cooldown followed by a rapid pressurization.

D. A rapid heatup followed by a rapid pressurization.

ANSWER: C.

TOPIC: 193010
KNOWLEDGE: K1.06 [3.6/3.8]
QID: P299

Pressurized thermal shock is a condition that can occur following a rapid _____ of the reactor coolant system if system pressure is rapidly _____.

A. cooldown; decreased

B. cooldown; increased

C. heatup; decreased

D. heatup; increased

ANSWER: B.

TOPIC: 193010
KNOWLEDGE: K1.06 [3.6/3.8]
QID: P2800

Which one of the following reactor coolant system (RCS) events would be <u>most</u> likely to cause a pressurized thermal shock to the reactor vessel?

A. Starting a reactor coolant pump in an idle RCS loop with the associated steam generator temperature less than the loop temperature.

B. Starting a reactor coolant pump in an idle RCS loop with the associated steam generator temperature greater than the loop temperature.

C. Continuous emergency coolant injection to the RCS during and after a complete and unisolable rupture of a steam generator steam outlet nozzle.

D. Continuous emergency coolant injection to the RCS during and after a complete and unisolable rupture of a reactor vessel coolant outlet nozzle.

ANSWER: C.

TOPIC: 193010
KNOWLEDGE: K1.07 [3.8/4.1]
QID: P100

During a severe reactor coolant system overcooling transient, a major concern is...

A. accelerated zirconium hydriding.

B. loss of reactor vessel water level.

C. loss of reactor coolant pump net positive suction head.

D. brittle fracture of the reactor vessel.

ANSWER: D.

TOPIC: 193010
KNOWLEDGE: K1.07 [3.8/4.1]
QID: P1000

An uncontrolled cooldown is a brittle fracture concern because it creates a large _____ stress at the _____ wall of the reactor vessel.

A. tensile; inner

B. tensile; outer

C. compressive; inner

D. compressive; outer

ANSWER: A.

TOPIC: 193010
KNOWLEDGE: K1.07 [3.8/4.1]
QID: P1099

During an uncontrolled cooldown of a reactor coolant system, the component most susceptible to brittle fracture is the...

A. reactor vessel.

B. steam generator tube sheet.

C. cold leg accumulator penetration.

D. loop resistance temperature detector penetration.

ANSWER: A.

TOPIC: 193010
KNOWLEDGE: K1.07 [3.8/4.1]
QID: P1199

Which one of the following describes the thermal stress placed on the reactor vessel wall during a cooldown of the reactor coolant system?

A. Tensile across the entire wall.

B. Compressive across the entire wall.

C. Tensile at the inner wall, compressive at the outer wall.

D. Compressive at the inner wall, tensile at the outer wall.

ANSWER: C.

TOPIC: 193010
KNOWLEDGE: K1.07 [3.8/4.1]
QID: P2797

A nuclear power plant heatup is in progress using reactor coolant pumps. The thermal stress applied to the reactor vessel is...

A. tensile across the entire wall.

B. tensile at the inner wall and compressive at the outer wall.

C. compressive across the entire wall.

D. compressive at the inner wall and tensile at the outer wall.

ANSWER: D.