TOPIC: 191008
KNOWLEDGE: K1.01 [2.6/2.8]
QID: P37

To completely deenergize an electrical component and its associated control and indication circuits, the component breaker should be...

A. open with the control switch in Pull-To-Lock.

B. open with the control switch tagged in the open position.

C. racked out and tagged in the racked-out position.

D. racked out with control power fuses removed.

ANSWER: D.

TOPIC: 191008
KNOWLEDGE: K1.02 [2.8/2.9]
QID: P838 (B1841)

Which one of the following describes the normal operation of a local breaker overcurrent trip flag indicator?

A. Actuates when no lockout is present; satisfies an electrical interlock to remotely close a breaker.

B. Actuates when a breaker overcurrent trip has occurred; can be manually reset when the overcurrent condition clears.

C. Actuates when a breaker has failed to trip on an overcurrent condition; can be manually reset when the overcurrent condition clears.

D. Actuates to cause a breaker trip when the overcurrent trip setpoint is reached; can be remotely reset when the overcurrent condition clears.

ANSWER: B.

TOPIC: 191008
KNOWLEDGE: K1.02 [2.8/2.9]
QID: P5020 (B1141)

Which one of the following describes the local overcurrent trip flag indicators for a breaker?

A. They actuate prior to breaker tripping to warn of imminent protective action.

B. They indicate breaker overcurrent trip actuation during and after breaker trip actuation.

C. When actuated, they indicate that the associated breaker has failed to trip open.

D. When actuated, they indicate that the breaker overcurrent trip relay has been reset.

ANSWER: B.

TOPIC: 191008
KNOWLEDGE: K1.03 [2.9/3.1]
QID: P40 (B1943)

Loss of breaker control power will cause...

A. breaker line voltage to indicate zero regardless of actual breaker position.

B. the remote breaker position to indicate open regardless of actual breaker position.

C. inability to operate the breaker locally and remotely.

D. failure of the closing spring to charge following local closing of the breaker.

ANSWER: D.

TOPIC: 191008
KNOWLEDGE: K1.03 [2.9/3.1]
QID: P118

Which one of the following results from a loss of control power to a breaker supplying a large motor?

A. The motor ammeter indication will be zero regardless of actual breaker position.

B. The breaker will trip open due to the actuation of its protective trip device.

C. The breaker position will remotely indicate closed regardless of actual position.

D. The breaker charging motor will not recharge the closing spring after the breaker closes.

ANSWER: D.

TOPIC: 191008
KNOWLEDGE: K1.03 [2.9/3.1]
QID: P240

Which one of the following will cause a loss of ability to remotely trip a breaker and a loss of remote breaker position indication?

A. Failure of the breaker control switch.

B. Racking the breaker to the TEST position.

C. Mechanical binding of the breaker tripping bar.

D. Loss of control power for the breaker.

ANSWER: D.

TOPIC: 191008
KNOWLEDGE: K1.03 [2.9/3.1]
QID: P338 (B40)

Which one of the following will cause a loss of indication from the remote breaker position indicating lights associated with a typical 480 VAC load supply breaker?

A. Locally opening the breaker.

B. Loss of breaker line voltage.

C. Removing the breaker control power fuses.

D. Burnout of the local breaker position indicating lights.

ANSWER: C.

TOPIC: 191008
KNOWLEDGE: K1.04 [2.9/3.0]
QID: P639

How is typical breaker operation affected when the associated breaker control power transfer switch is placed in the LOCAL position?

A. Control power will be available to provide protective trips, and the breaker can be electrically operated only from the control room.

B. Control power will be removed from both the open and close circuits, and the breaker can be electrically operated only from the control room.

C. Control power will be available to provide protective trips, and the breaker can be electrically operated only from the breaker cabinet.

D. Control power will be removed from both the open and close circuits, and the breaker can be electrically operated only from the breaker cabinet.

ANSWER: C.

TOPIC: 191008
KNOWLEDGE: K1.04 [2.9/3.0]
QID: P840 (B840)

A typical 120 VAC manual circuit breaker tripped due to overload. To close this circuit breaker, the handle must be moved from the...

A. OFF position directly to the ON position; trip latch reset is not required.

B. midposition directly to the ON position; trip latch reset is not required.

C. OFF position to the midposition to reset the trip latch, and then to the ON position.

D. midposition to the OFF position to reset the trip latch, and then to the ON position.

ANSWER: D.

TOPIC: 191008
KNOWLEDGE: K1.04 [2.9/3.0]
QID: P2041 (B3344)

Two identical 1,000 MW generators are operating in parallel, supplying the same isolated electrical bus. The generator output breakers provide identical protection for the generators. Generator A and B output indications are as follows:

Generator A	Generator B
22.5 KV	22.5 KV
60.2 Hertz	60.2 Hertz
750 MW	750 MW
25 MVAR (out)	50 MVAR (out)

A malfunction causes the voltage regulator setpoint for generator B to slowly and continuously increase. If no operator action is taken, which one of the following describes the electrical current indications for generator A?

A. Current will decrease continuously until the output breaker for generator A trips on reverse power.

B. Current will decrease continuously until the output breaker for generator B trips on reverse power.

C. Current will initially decrease, and then increase until the output breaker for generator A trips on overcurrent.

D. Current will initially decrease, and then increase until the output breaker for generator B trips on overcurrent.

ANSWER: D.

TOPIC: 191008
KNOWLEDGE: K1.04 [2.9/3.0]
QID: P2439 (B2444)

Two identical 1,000 MW generators are operating in parallel, supplying all the loads on an isolated electrical bus. The generator output breakers provide identical protection for the generators. Generator A and B output indications are as follows:

Generator A	Generator B
28 KV	28 KV
60 Hertz	60 Hertz
150 MW	100 MW
25 MVAR (out)	50 MVAR (out)

A malfunction causes the voltage regulator setpoint for generator B to slowly and continuously decrease. If no operator action is taken, the electrical current indication for generator B will...

A. initially decrease, and then increase until the output breaker for generator A trips on overcurrent.

B. initially decrease, and then increase until the output breaker for generator B trips on overcurrent.

C. decrease continuously until the output breaker for generator A trips on overcurrent.

D. decrease continuously until the output breaker for generator B trips on reverse power.

ANSWER: A.

TOPIC: 191008
KNOWLEDGE: K1.04 [2.9/3.0]
QID: P2540 (B2543)

Two identical 1,000 MW generators are operating in parallel supplying the same isolated electrical bus. The generator output breakers also provide identical protection for the generators. Generator A and B output indications are as follows:

Generator A	Generator B
22 KV	22 KV
60.2 Hertz	60.2 Hertz
200 MW	200 MW
25 MVAR (out)	50 MVAR (out)

A malfunction causes the voltage regulator setpoint for generator A to slowly and continuously increase. If no operator action is taken, generator B output current will...

A. initially decrease, and then increase until the output breaker for generator A trips on overcurrent.

B. initially decrease, and then increase until the output breaker for generator B trips on overcurrent.

C. increase continuously until the output breaker for generator A trips on overcurrent.

D. increase continuously until the output breaker for generator B trips on overcurrent.

ANSWER: A.

TOPIC: 191008
KNOWLEDGE: K1.04 [2.9/3.0]
QID: P2639

Two identical 1,000 MW electrical generators are operating in parallel supplying the same isolated electrical bus. The generator output breakers provide identical protection for the generators. Generator A and B output indications are as follows:

Generator A	Generator B
22 KV	22 KV
60.2 Hertz	60.2 Hertz
200 MW	200 MW
25 MVAR (out)	50 MVAR (out)

A malfunction causes the voltage regulator setpoint for generator A to slowly and continuously decrease. If no operator action is taken, generator B output current will increase until...

A. the output breaker for generator A trips on overcurrent.

B. the output breaker for generator B trips on overcurrent.

C. the output breaker for generator A trips on reverse power.

D. the output breaker for generator B trips on reverse power.

ANSWER: B.

TOPIC: 191008
KNOWLEDGE: K1.04 [2.9/3.0]
QID: P4620 (B4615)

Two identical 1,000 MW generators are operating in parallel supplying the same isolated electrical bus. The generator output breakers provide identical protection for the generators. Generator A and B output indications are as follows:

Generator A	Generator B
22 KV	22 KV
60.2 Hertz	60.2 Hertz
200 MW	200 MW
25 MVAR (out)	50 MVAR (out)

A malfunction causes the voltage regulator setpoint for generator B to slowly and continuously increase. If no operator action is taken, generator A output current will...

A. increase continuously until the output breaker for generator A trips on overcurrent.

B. decrease continuously until the output breaker for generator B trips on overcurrent.

C. initially decrease, and then increase until the output breaker for generator A trips on overcurrent.

D. initially decrease, and then increase until the output breaker for generator B trips on overcurrent.

ANSWER: D.

TOPIC: 191008
KNOWLEDGE: K1.06 [2.3/2.6]
QID: P540 (B541)

Refer to the drawing of a valve motor control circuit (see figure below).

What is the purpose of depressing the S1 pushbutton?

A. To deenergize the K3 relay after the initiating condition has cleared.

B. To prevent energizing the K3 relay when the initiating condition occurs.

C. To manually energize the K3 relay in the absence of the initiating condition.

D. To maintain the K3 relay energized after the initiating condition has cleared.

ANSWER: A.

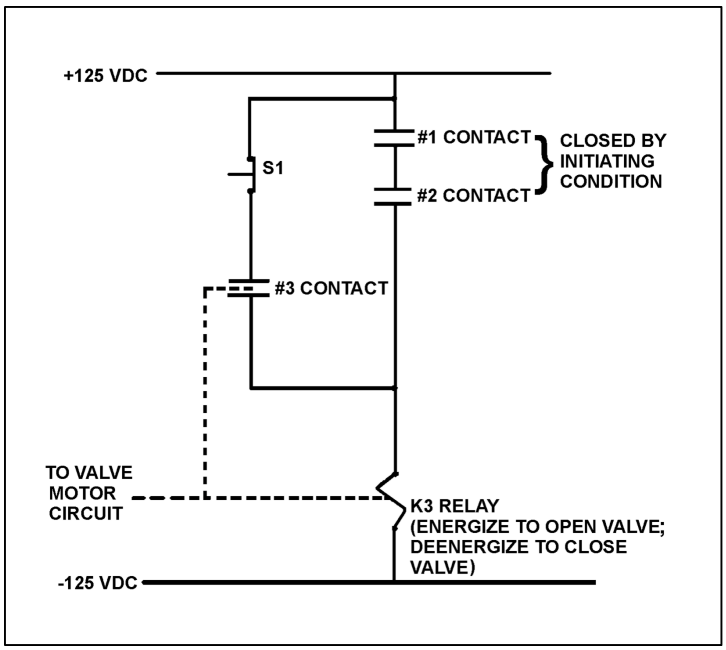

TOPIC: 191008
KNOWLEDGE: K1.06 [2.3/2.6]
QID: P640 (B116)

Refer to the drawing of a valve motor control circuit (see figure below).

One purpose of the K3 relay is to...

A. hold the valve open after one or both initiating conditions have cleared, even if the reset pushbutton (S1) is depressed.

B. hold the valve open even if one or both initiating conditions have cleared.

C. close the valve as soon as either initiating condition has cleared.

D. close the valve as soon as both initiating conditions have cleared.

ANSWER: B.

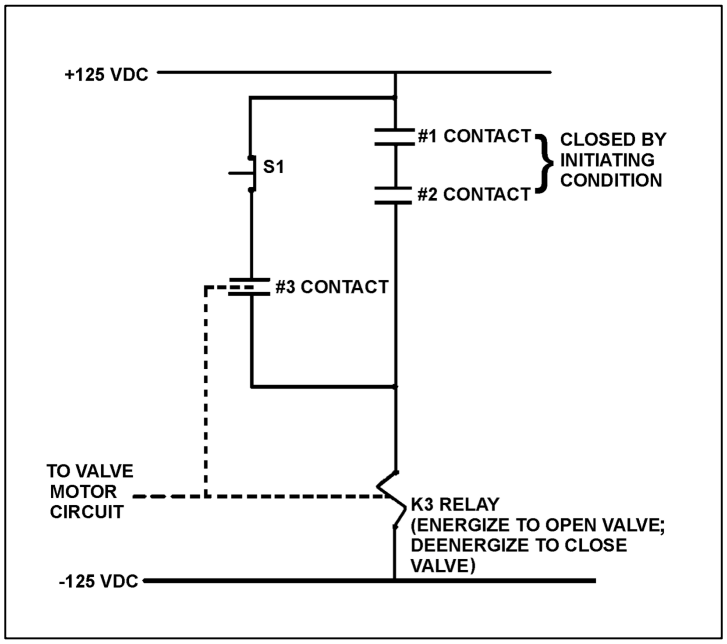

TOPIC: 191008
KNOWLEDGE: K1.06 [2.3/2.6]
QID: P742 (B742)

Refer to the drawing of a valve motor control circuit (see figure below).

The valve is currently open with the contact configuration as shown. If the S1 pushbutton is depressed, the valve will _____; and when the S1 pushbutton is subsequently released, the valve will _____.

A. remain open; remain open

B. close; remain closed

C. remain open; close

D. close; open

ANSWER: B.

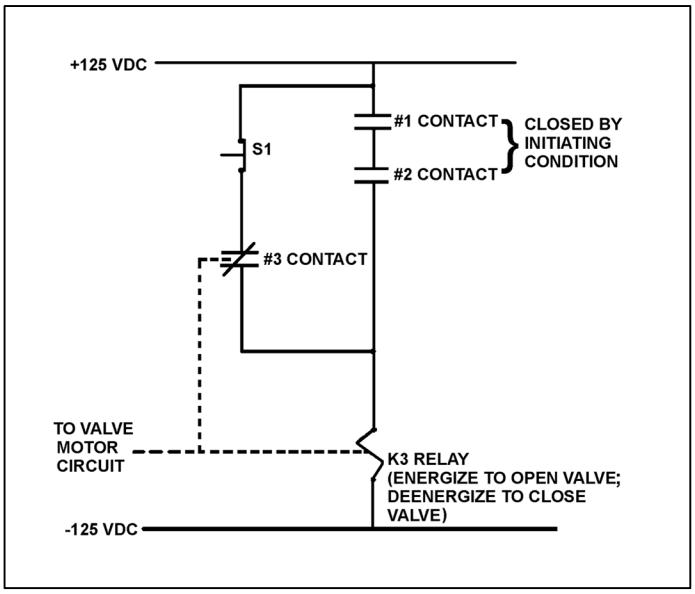

TOPIC: 191008
KNOWLEDGE: K1.06 [2.3/2.6]
QID: P941 (B942)

Refer to the drawing of a valve motor control circuit (see figure below).

Which one of the following describes the function of the #3 contact?

A. To keep the K3 relay energized after the initiating condition clears.

B. To provide a method for manually energizing the K3 relay.

C. To increase circuit reliability because any one of the three contacts can energize the K3 relay.

D. To ensure the K3 relay can always be deenergized even with the initiating condition present.

ANSWER: A.

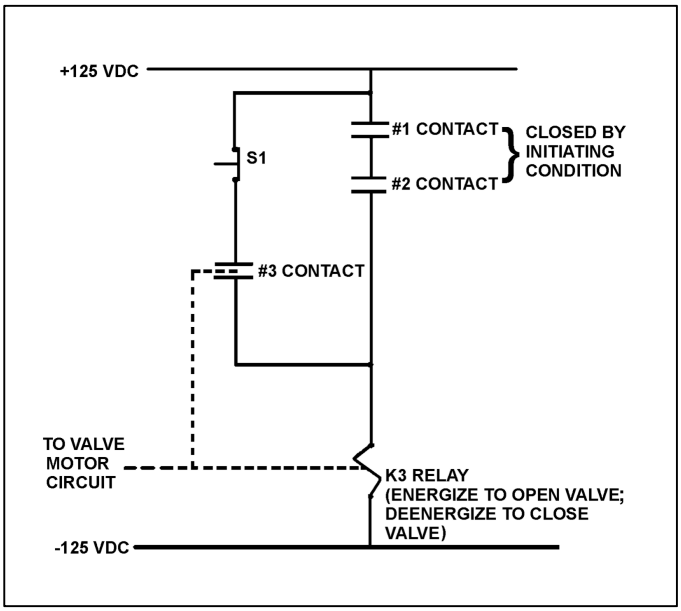

TOPIC: 191008
KNOWLEDGE: K1.06 [2.3/2.6]
QID: P1040 (B1042)

Refer to the drawing of a valve motor control circuit (see figure below).

The initiating condition occurs and closes the #1 and #2 contacts to energize the K3 relay and open the valve. Which one of the following will close the valve?

A. Loss of 125 VDC.

B. Both #1 and #2 contacts open.

C. Either #1 or #2 contact opens.

D. Depressing the S1 pushbutton with the initiating condition present.

ANSWER: A.

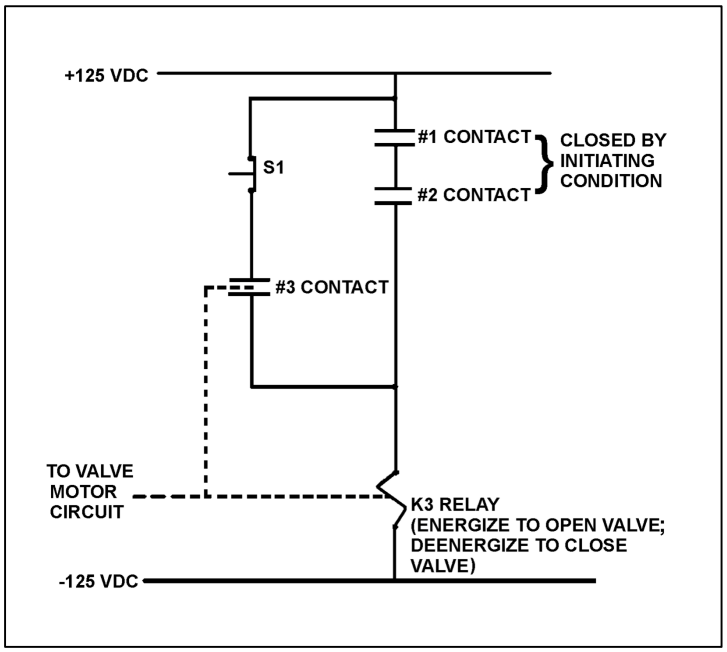

TOPIC: 191008
KNOWLEDGE: K1.06 [2.3/2.6]
QID: P1239 (B5022)

Refer to the drawing of a valve motor control circuit (see figure below).

Note: Limit switch (LS) contacts are shown open regardless of valve position, but relay contacts are shown open/closed according to the standard convention for control circuit drawings.

If the valve is currently closed, when will the alarm actuate?

A. As soon as PB2 is pushed.

B. Ten seconds after PB2 is pushed if the valve is still closed.

C. Immediately upon pushing PB2 and for the next 10 seconds if the valve remains closed.

D. Ten seconds after PB2 is pushed if the valve is still stroking open.

ANSWER: B.

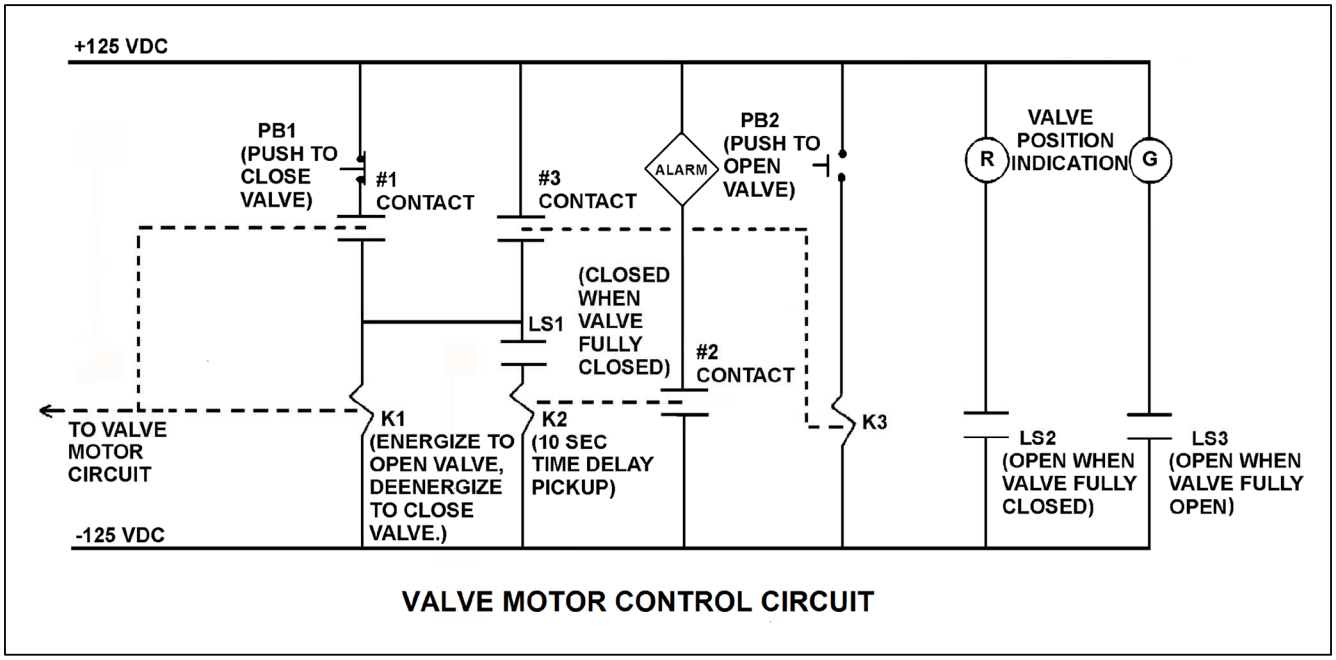

VALVE MOTOR CONTROL CIRCUIT

TOPIC: 191008
KNOWLEDGE: K1.06 [2.3/2.6]
QID: P1340 (B1341)

Refer to the drawing of a valve motor control circuit for a valve that is currently fully closed (see figure below).

Note: Limit switch (LS) contacts are shown open regardless of valve position, but relay contacts are shown open/closed according to the standard convention for control circuit drawings.

Which one of the following describes when the motor-operated valve will begin to stroke open?

A. At the same time the alarm actuates.

B. 10 seconds after PB2 is depressed.

C. Immediately after PB2 is depressed.

D. Immediately after PB1 is depressed if contact #1 is closed.

ANSWER: C.

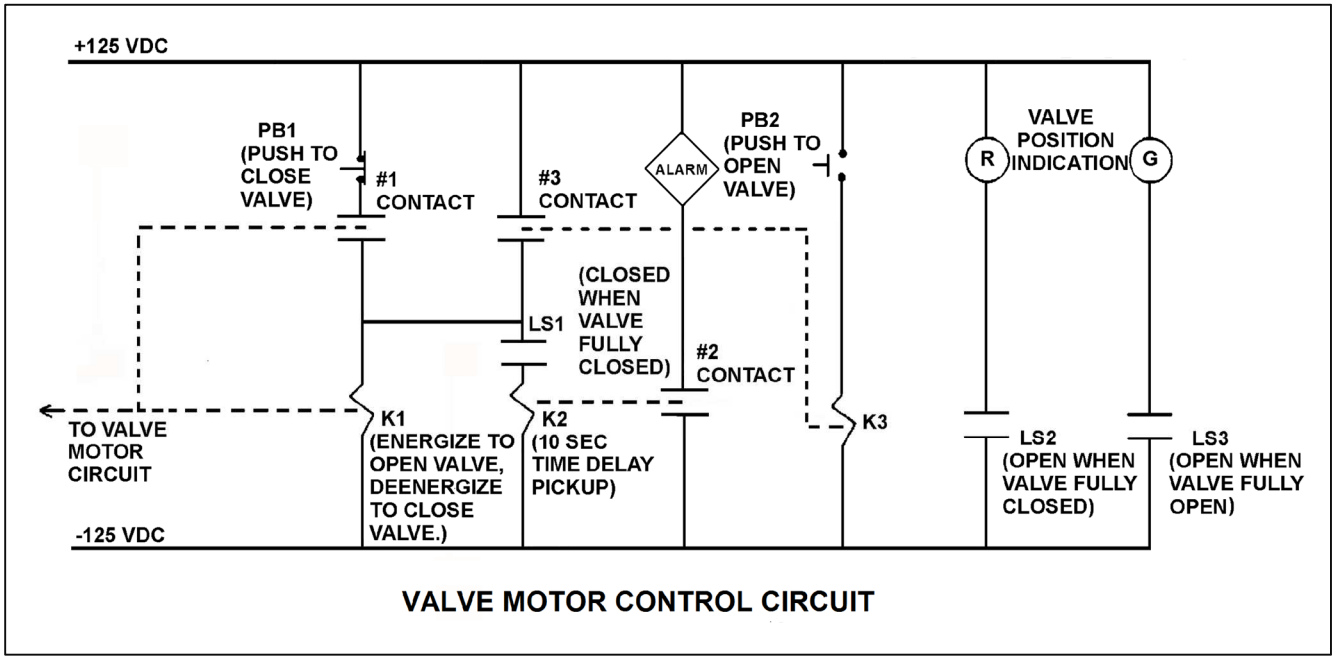

VALVE MOTOR CONTROL CIRCUIT

TOPIC: 191008
KNOWLEDGE: K1.06 [2.3/2.6]
QID: P1440 (B1441)

Refer to the drawing of a valve motor control circuit (see figure below).

Pushbutton PB2 was depressed to open the valve, and the current contact and pushbutton status is as shown with the following exceptions:

LS1 is closed.
LS3 is closed.
#1 contact is closed.
#2 contact is closed.

Which one of the following describes the condition of the valve and its control circuit?

A. The valve is closed and the valve motor circuit has just been energized to open the valve.

B. The valve is closed and an open demand signal has existed for at least 10 seconds.

C. The valve is partially open and the valve motor circuit is deenergized because PB2 was prematurely released.

D. The valve is partially open and an open demand signal has existed for at least 10 seconds.

ANSWER: B.

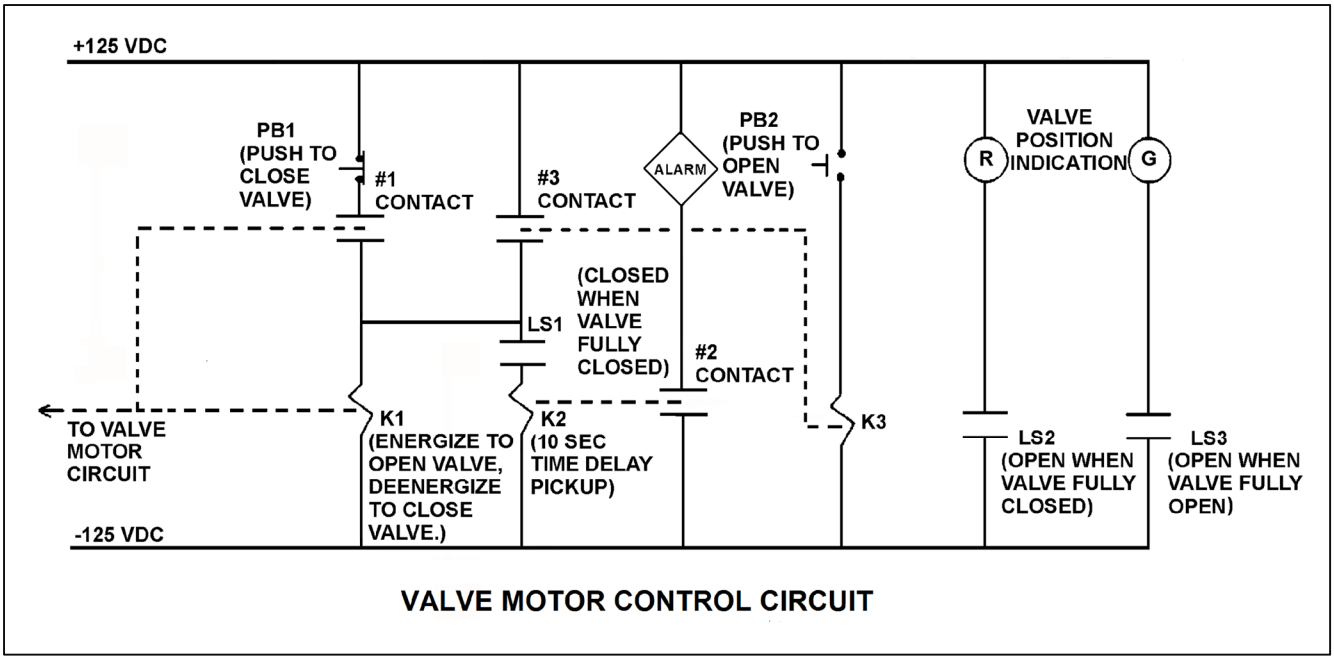

VALVE MOTOR CONTROL CIRCUIT

TOPIC: 191008
KNOWLEDGE: K1.06 [2.3/2.6]
QID: P1540 (B1542)

Refer to the drawing of a valve motor control circuit (see figure below).

Note: Limit switch (LS) contacts are shown open regardless of valve position, but relay contacts are shown open/closed according to the standard convention for control circuit drawings.

Which one of the following describes the purpose of the alarm?

A. Alert the operator when the valve motor circuit has been energized for 10 seconds after pushbutton PB2 is depressed.

B. Alert the operator when the valve has not moved off its closed seat within 10 seconds of depressing pushbutton PB2.

C. Alert the operator that the valve is opening by sounding the alarm for 10 seconds after PB2 is depressed.

D. Alert the operator if the valve has not reached full open within 10 seconds of depressing pushbutton PB2.

ANSWER: B.

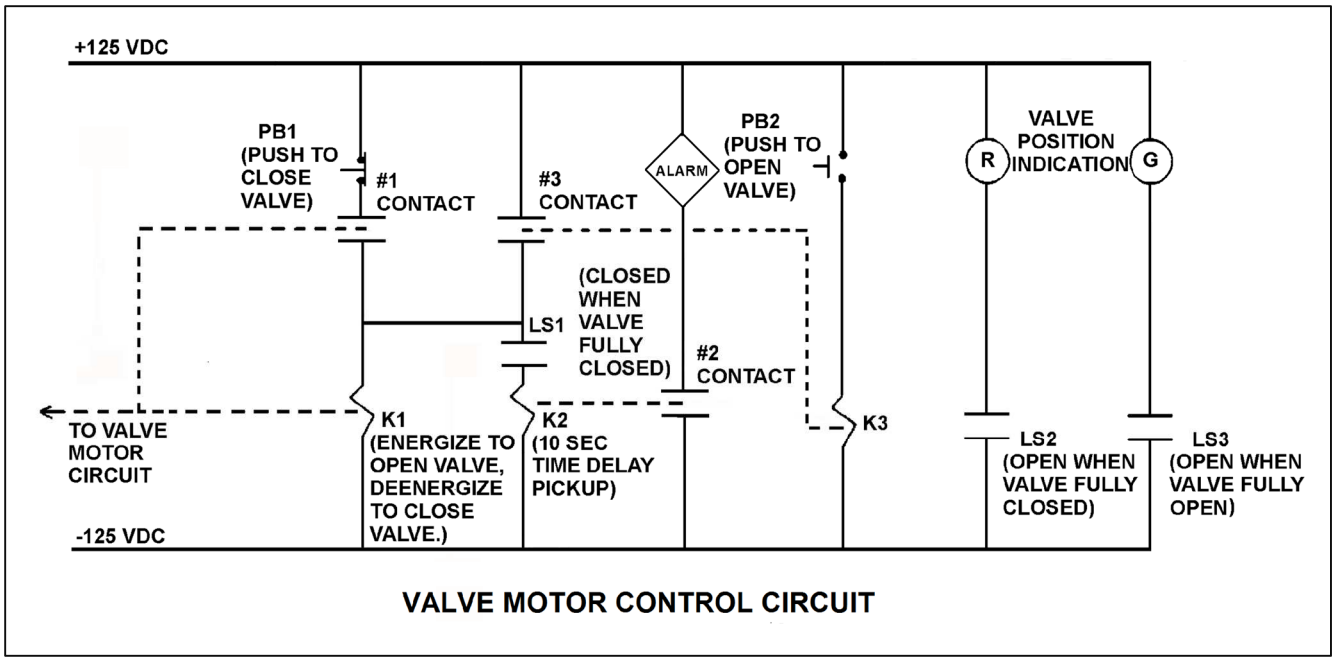

VALVE MOTOR CONTROL CIRCUIT

TOPIC: 191008
KNOWLEDGE: K1.06 [2.3/2.6]
QID: P1640 (B1644)

Refer to the drawing of a valve motor control circuit (see figure below).

Note: Limit switch (LS) contacts are shown open regardless of valve position, but relay contacts are shown open/closed according to the standard convention for control circuit drawings.

The valve is half open and moving to the open position. Which one of the following describes the current condition of the valve position indicating lights?

A. Red light on, green light on

B. Red light on, green light off

C. Red light off, green light on

D. Red light off, green light off

ANSWER: A.

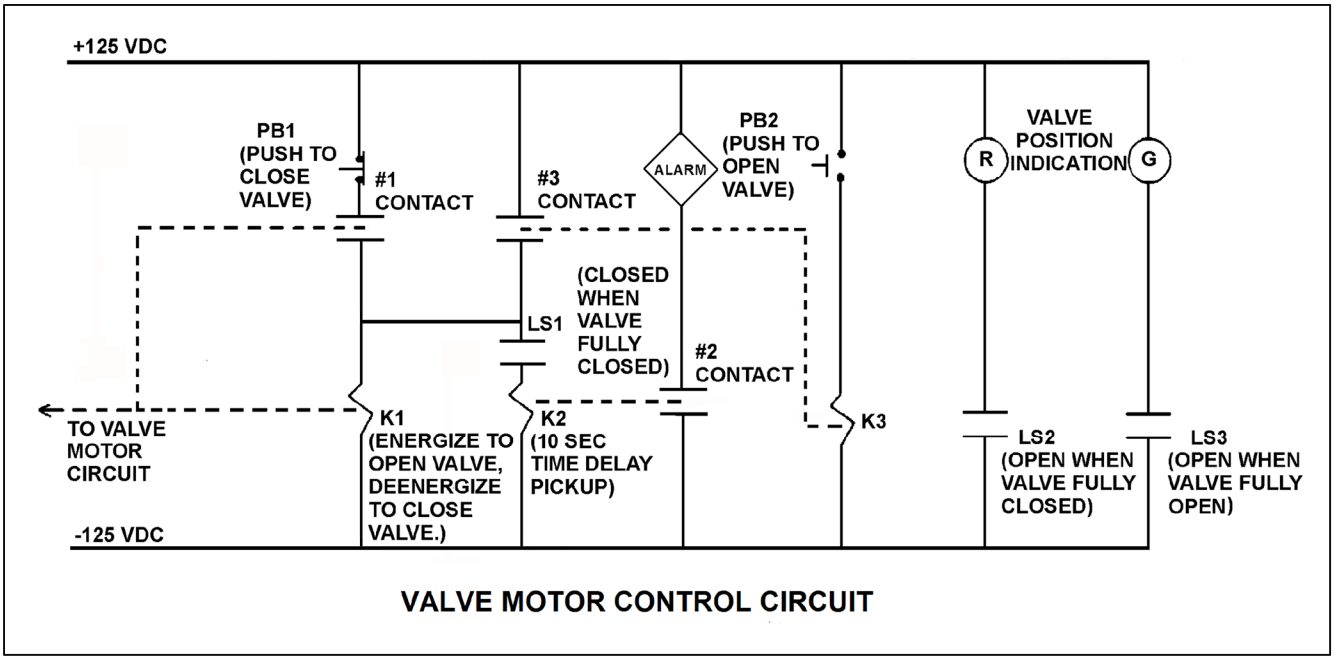

VALVE MOTOR CONTROL CIRCUIT

TOPIC: 191008
KNOWLEDGE: K1.06 [2.3/2.6]
QID: P1739 (B1742)

Refer to the drawing of a valve motor control circuit (see figure below).

Note: Limit switch (LS) contacts are shown open regardless of valve position, but relay contacts are shown open/closed according to the standard convention for control circuit drawings.

Pushbutton PB2 has been momentarily depressed and then released, and the valve is currently at mid-stroke and moving to the open position. Under these conditions, which one of the following describes the position of contacts #1, #2, and #3?

A. #1 closed; #2 open; #3 open

B. #1 open; #2 closed; #3 closed

C. #1 open; #2 closed; #3 open

D. #1 closed; #2 open; #3 closed

ANSWER: A.

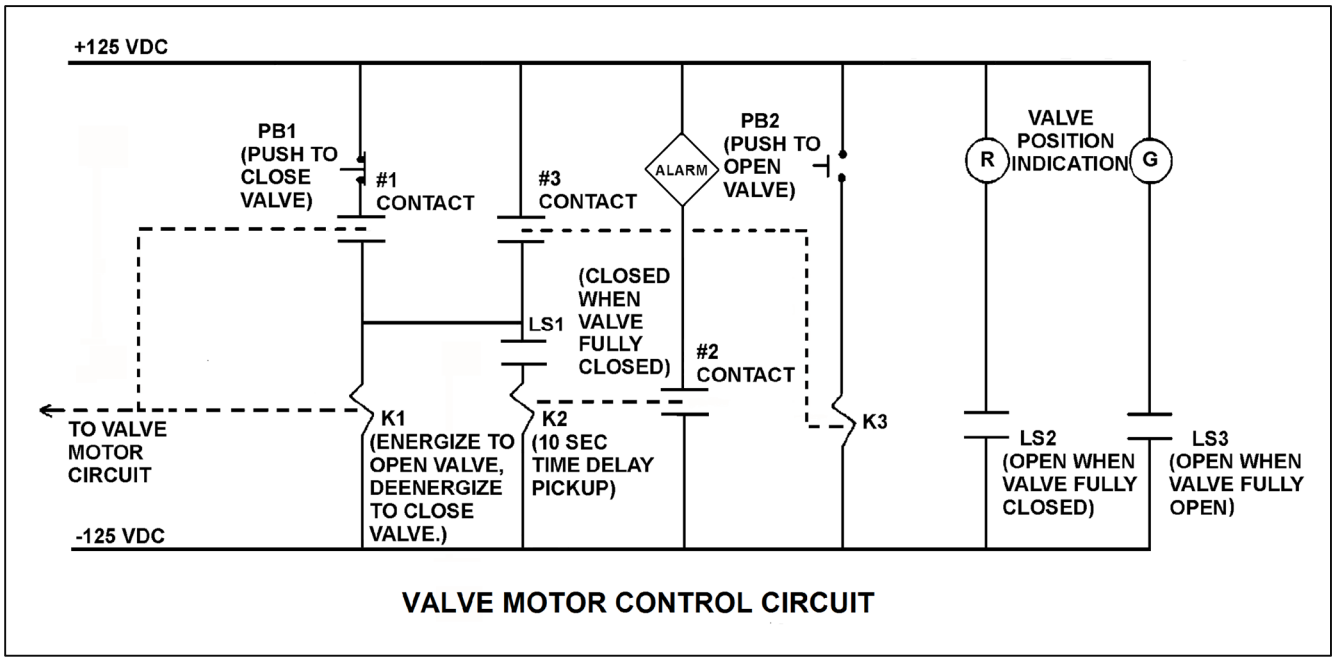

VALVE MOTOR CONTROL CIRCUIT

TOPIC: 191008
KNOWLEDGE: K1.06 [2.3/2.6]
QID: P2239 (B2341)

Refer to the drawing of a valve motor control circuit (see figure below) for a valve that is currently fully open and has a 10-second stroke time.

Note: Limit switch (LS) contacts are shown open regardless of valve position, but relay contacts are shown open/closed according to the standard convention for control circuit drawings.

Which one of the following describes the valve response if the control switch is taken to the CLOSE position for two seconds and then released?

A. The valve will not move.

B. The valve will close fully.

C. The valve will begin to close and then stop moving.

D. The valve will begin to close and then open fully.

ANSWER: C.

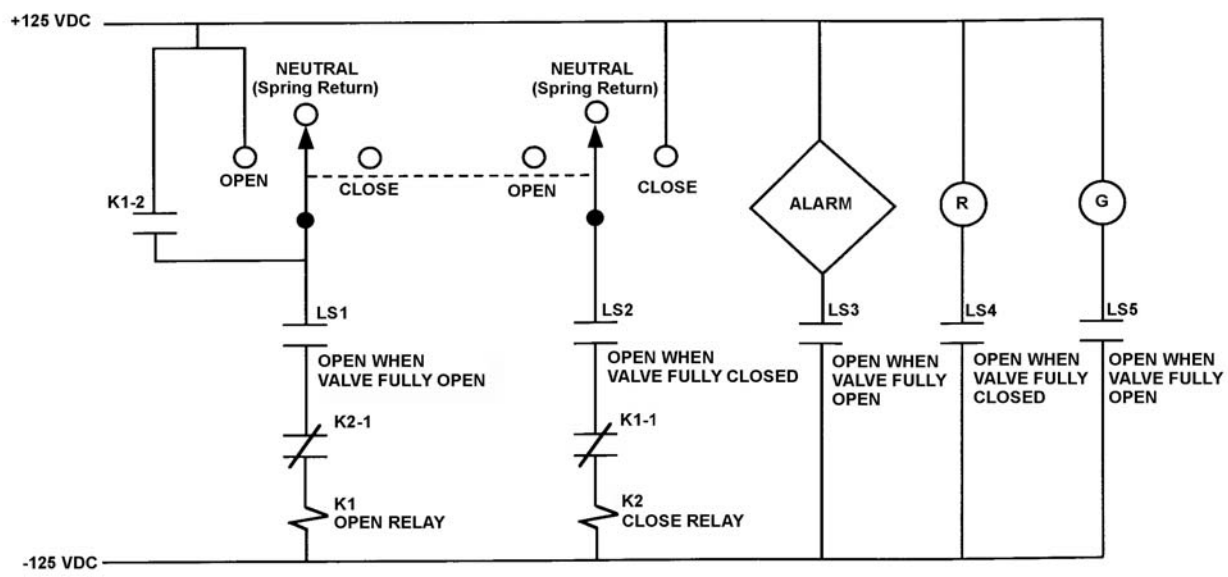

VALVE MOTOR CONTROL CIRCUIT

TOPIC: 191008
KNOWLEDGE: K1.06 [2.3/2.6]
QID: P2341 (B2442)

Refer to the drawing of a valve motor control circuit (see figure below) for a valve that is currently fully closed and has a 10-second stroke time.

Note: Limit switch (LS) contacts are shown open regardless of valve position, but relay contacts are shown open/closed according to the standard convention for control circuit drawings.

Which one of the following describes the valve response if the control switch is taken to the OPEN position for two seconds and then released?

A. The valve will not move.

B. The valve will open fully.

C. The valve will begin to open and then stop moving.

D. The valve will begin to open and then close fully.

ANSWER: B.

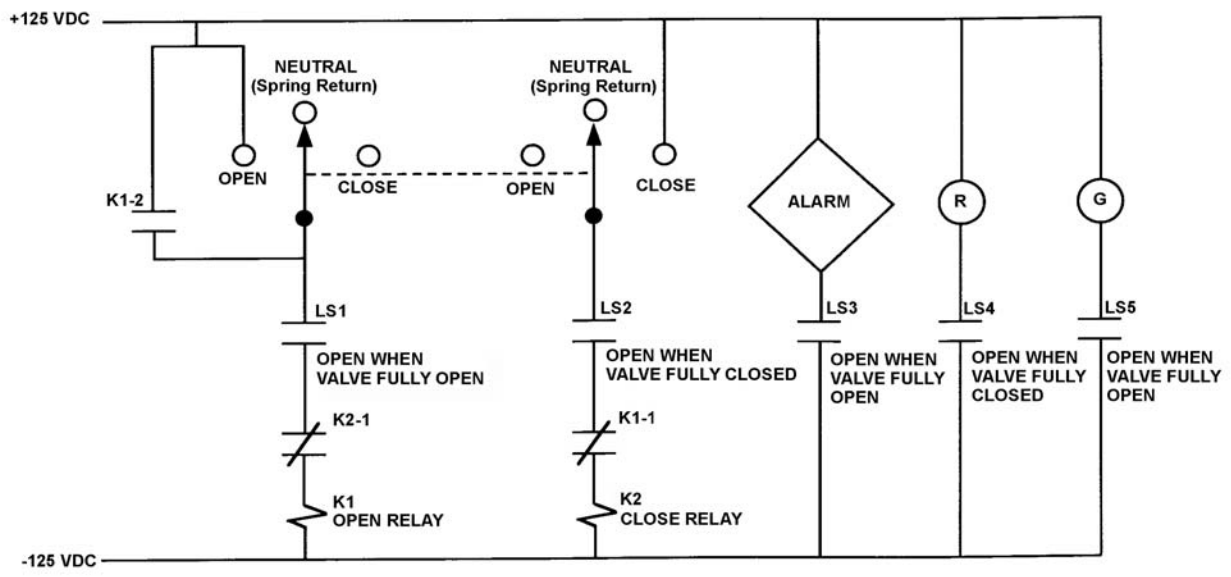

VALVE MOTOR CONTROL CIRCUIT

TOPIC: 191008
KNOWLEDGE: K1.06 [2.3/2.6]
QID: P2539 (B2542)

Refer to the drawing of a valve motor control circuit (see figure below) for a valve that is currently fully open and has a 10-second stroke time. Limit switch LS2 has failed open .

Note: Limit switch (LS) contacts are shown open regardless of valve position, but relay contacts are shown open/closed according to the standard convention for control circuit drawings.

Which one of the following describes the valve response if the control switch is taken to the CLOSE position for 2 seconds and then released?

A. The valve will <u>not</u> move.

B. The valve will close fully.

C. The valve will begin to close and then stop moving.

D. The valve will begin to close and then open fully.

ANSWER: A.

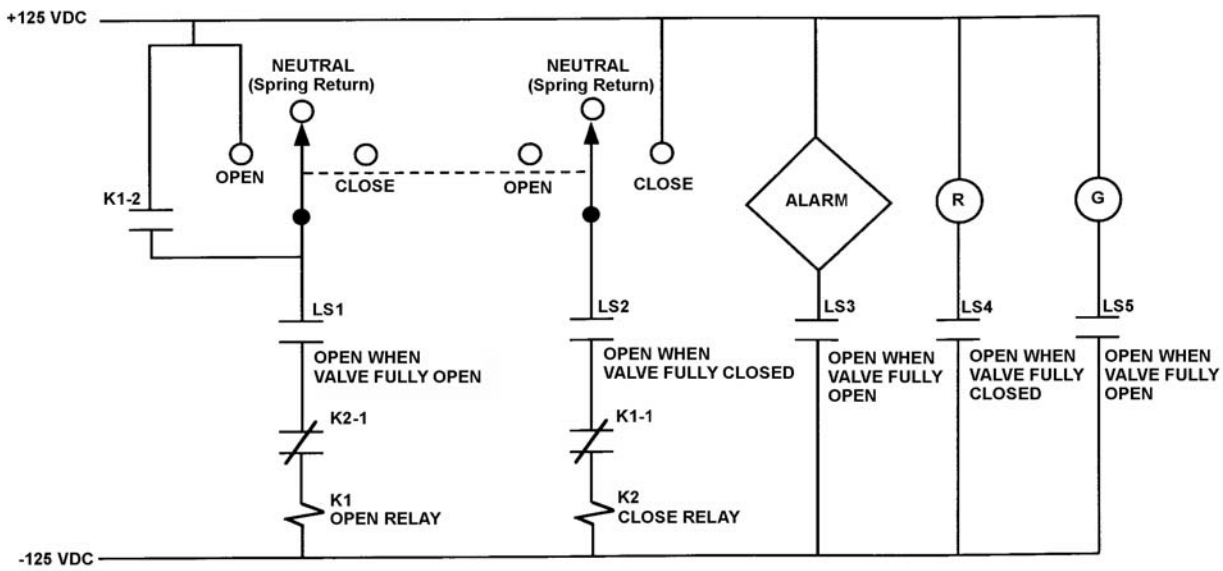

VALVE MOTOR CONTROL CIRCUIT

TOPIC: 191008
KNOWLEDGE: K1.06 [2.3/2.6]
QID: P2640 (B2841)

Refer to the drawing of a valve motor control circuit (see figure below) for a valve that is currently fully closed and has a 10-second stroke time.

Note: Limit switch (LS) contacts are shown open regardless of valve position, but relay contacts are shown open/closed according to the standard convention for control circuit drawings.

The operator takes the control switch to OPEN momentarily and the valve begins to open. Five seconds later, the operator takes the switch to CLOSE momentarily and then releases the switch. Which one of the following describes the valve response after the switch is released?

A. The valve will stop opening and remain partially open.

B. The valve will stop opening and then go fully closed.

C. The valve will open fully and remain fully open.

D. The valve will open fully and then go fully closed.

ANSWER: C.

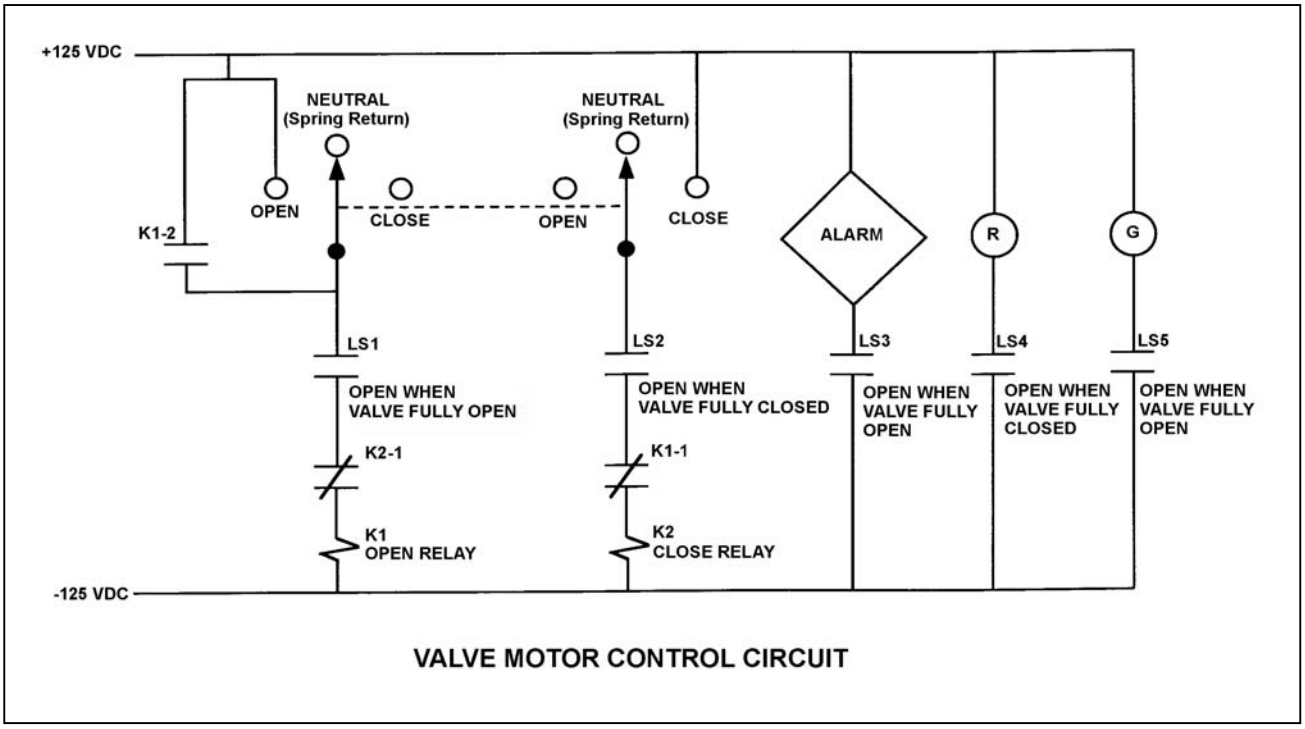

VALVE MOTOR CONTROL CIRCUIT

TOPIC: 191008
KNOWLEDGE: K1.06 [2.3/2.6]
QID: P2739 (B2741)

Refer to the drawing of a valve motor control circuit (see figure below) for a valve that is currently fully closed and has a 10-second stroke time.

Note: Limit switch (LS) contacts are shown open regardless of valve position, but relay contacts are shown open/closed according to the standard convention for control circuit drawings.

An operator takes the control switch to OPEN momentarily and the valve begins to open. Five seconds later, the operator places and holds the switch in the CLOSE position. Which one of the following describes the valve response with the switch held in the CLOSE position?

A. The valve will stop opening and remain partially open.

B. The valve will stop opening and then go fully closed.

C. The valve will open fully and remain fully open.

D. The valve will open fully and then go fully closed.

ANSWER: D.

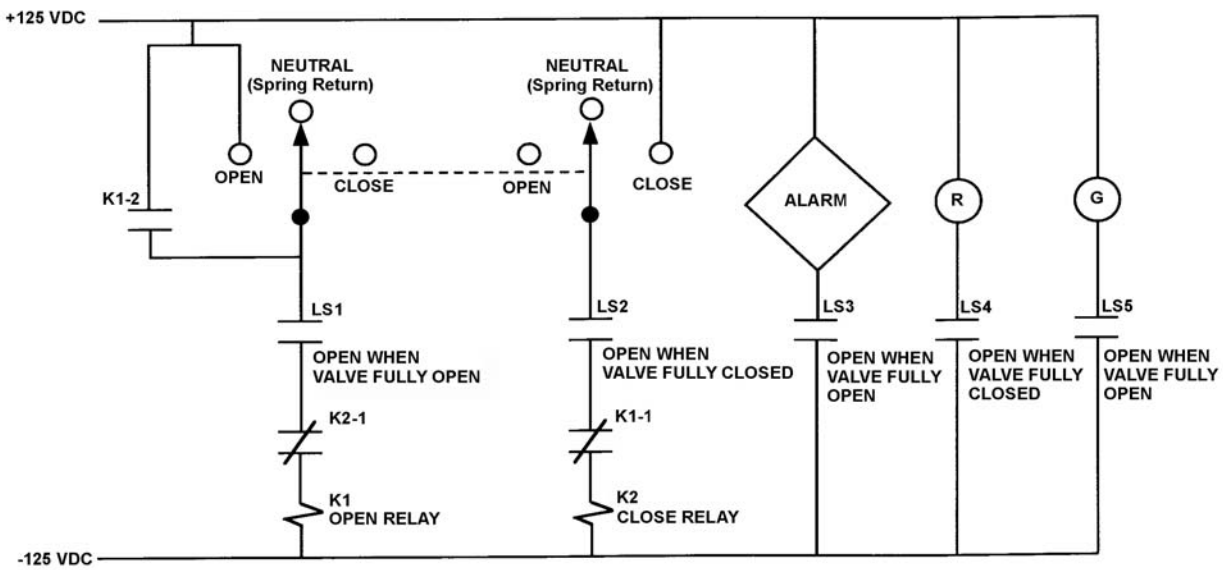

VALVE MOTOR CONTROL CIRCUIT

TOPIC: 191008
KNOWLEDGE: K1.06 [2.3/2.6]
QID: P2839

Refer to the drawing of a valve motor control circuit (see figure below) for a valve that is currently fully closed and has a 10-second stroke time.

Note: Limit switch (LS) contacts are shown open regardless of valve position, but relay contacts are shown open/closed according to the standard convention for control circuit drawings.

An operator takes the control switch to OPEN. Two seconds later, after verifying the valve is opening, the operator releases the control switch. Which one of the following describes the valve motor control circuit alarm response after the switch is released?

A. The alarm will continue to actuate for approximately 8 seconds.

B. The alarm will continue to actuate until additional operator action is taken.

C. The alarm will actuate after approximately 8 seconds.

D. The alarm will <u>not</u> actuate until additional operator action is taken.

ANSWER: A.

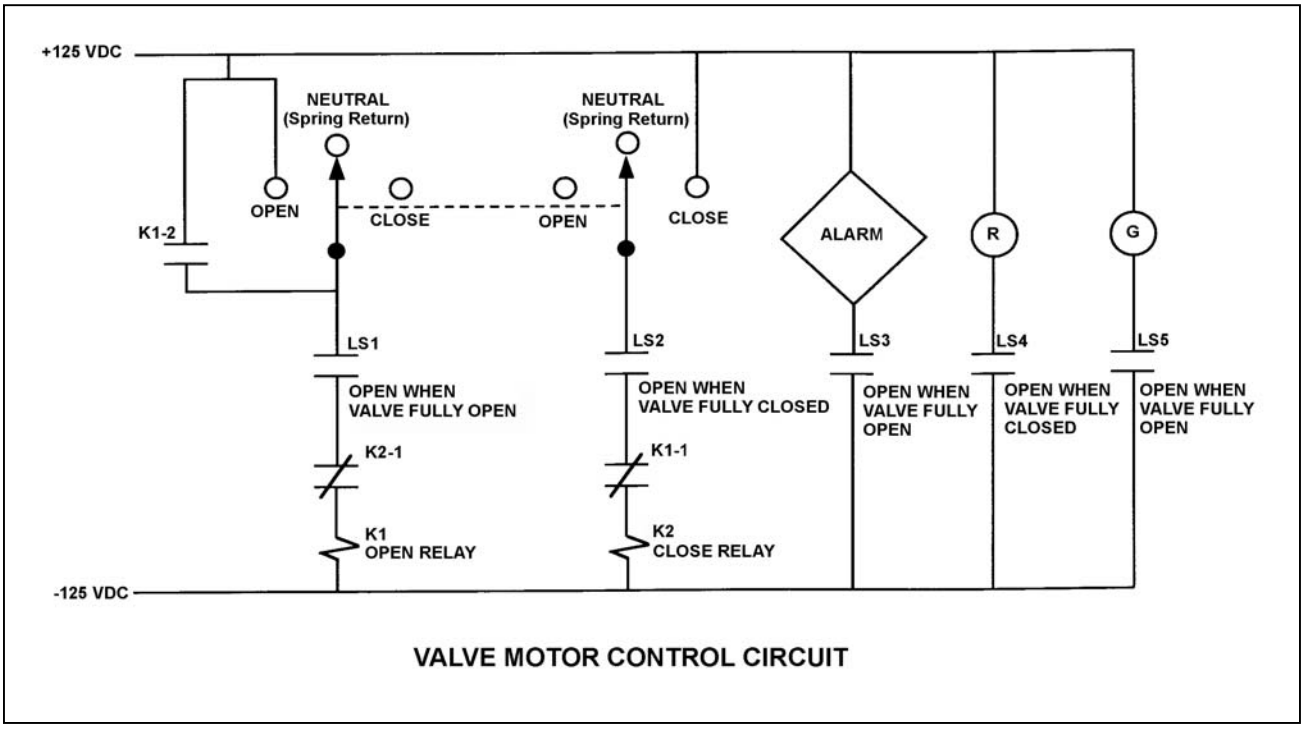

VALVE MOTOR CONTROL CIRCUIT

TOPIC: 191008
KNOWLEDGE: K1.06 [2.3/2.6]
QID: P2942 (B2940)

Refer to the drawing of a motor and its control circuit (see figure below).

Note: Relay contacts are shown open/closed according to the standard convention for control circuit drawings.

What is the purpose of the Time Delay Coil (TD) in the motor controller circuit?

A. Ensures the motor cannot be started until the overload relays are reset.

B. Ensures the motor cannot be started until the accelerating coil is energized.

C. Allows the motor to come up to speed before bypassing the starting resistors.

D. Allows the motor to come up to speed before placing the starting resistors in the circuit.

ANSWER: C.

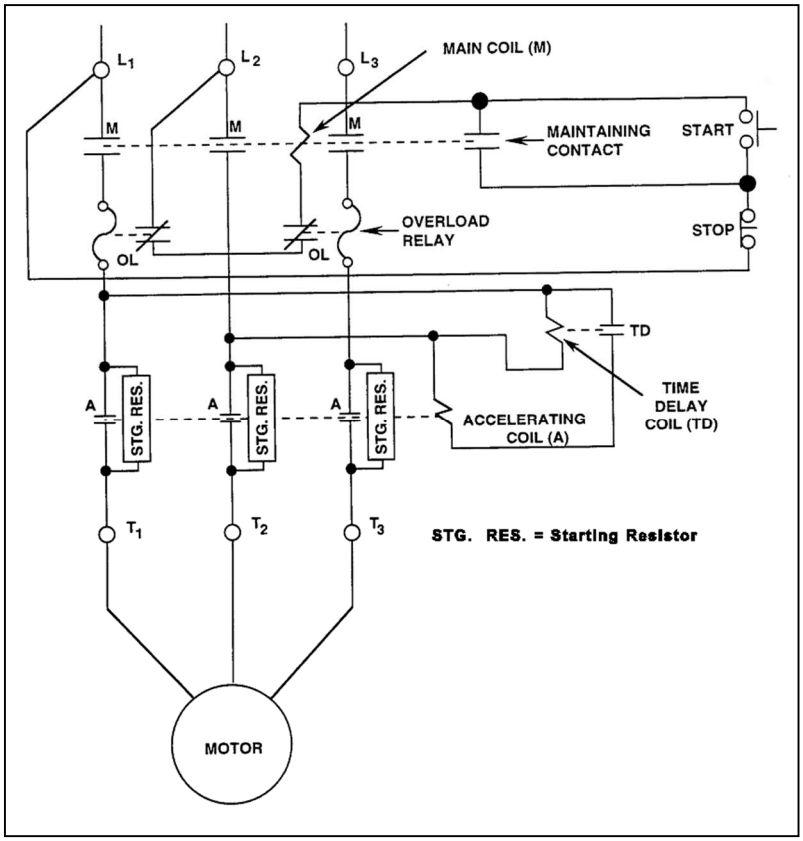

TOPIC: 191008
KNOWLEDGE: K1.06 [2.3/2.6]
QID: P3640 (B3641)

Refer to the drawing of a motor and its control circuit (see figure below).

Note: Relay contacts are shown open/closed according to the standard convention for control circuit drawings.

The motor receives overload protection from _____ overload relays; and _____ overload relay(s) must actuate to deenergize the motor.

A. two; one

B. two; two

C. three; one

D. three; two

ANSWER: A.

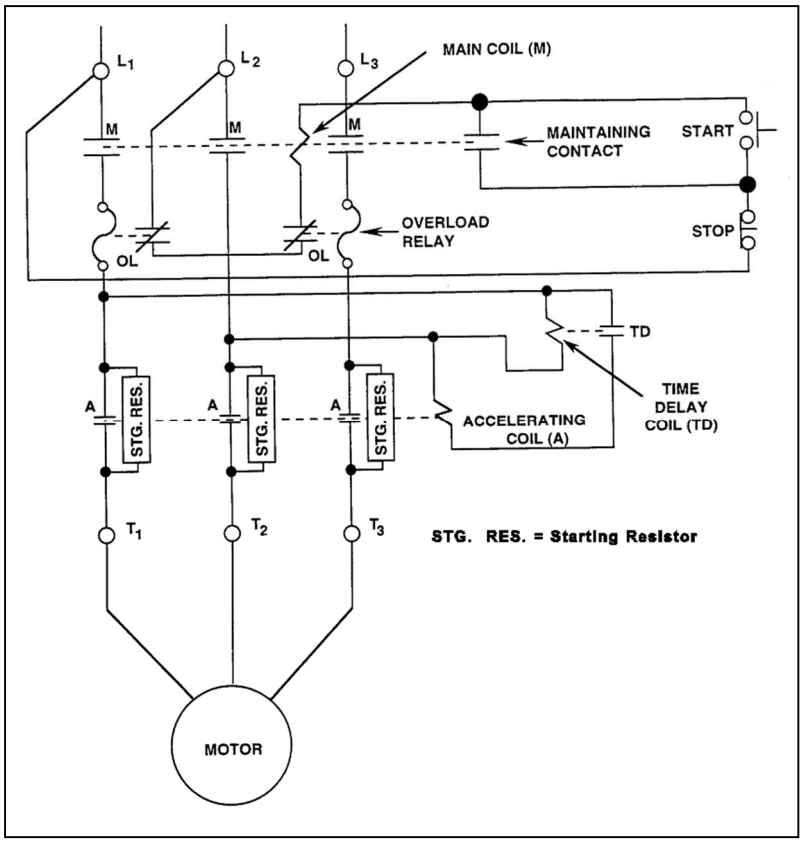

TOPIC: 191008
KNOWLEDGE: K1.06 [2.3/2.6]
QID: P3921 (B3921)

Refer to the drawing of a valve motor control circuit (see figure below) for a valve that is currently fully closed and has a 10-second stroke time.

Note: Limit switch (LS) contacts are shown open regardless of valve position, but relay contacts are shown open/closed according to the standard convention for control circuit drawings.

The operator takes the control switch to OPEN for 5 seconds and then releases the switch. After one minute, the operator takes the control switch to CLOSE for 5 seconds and then releases the switch. Which one of the following describes the valve position immediately after the control switch is released the second time?

A. Approximately fully open.

B. Approximately fully closed.

C. Approximately 50 percent open.

D. Cannot be determined without additional information.

ANSWER: B.

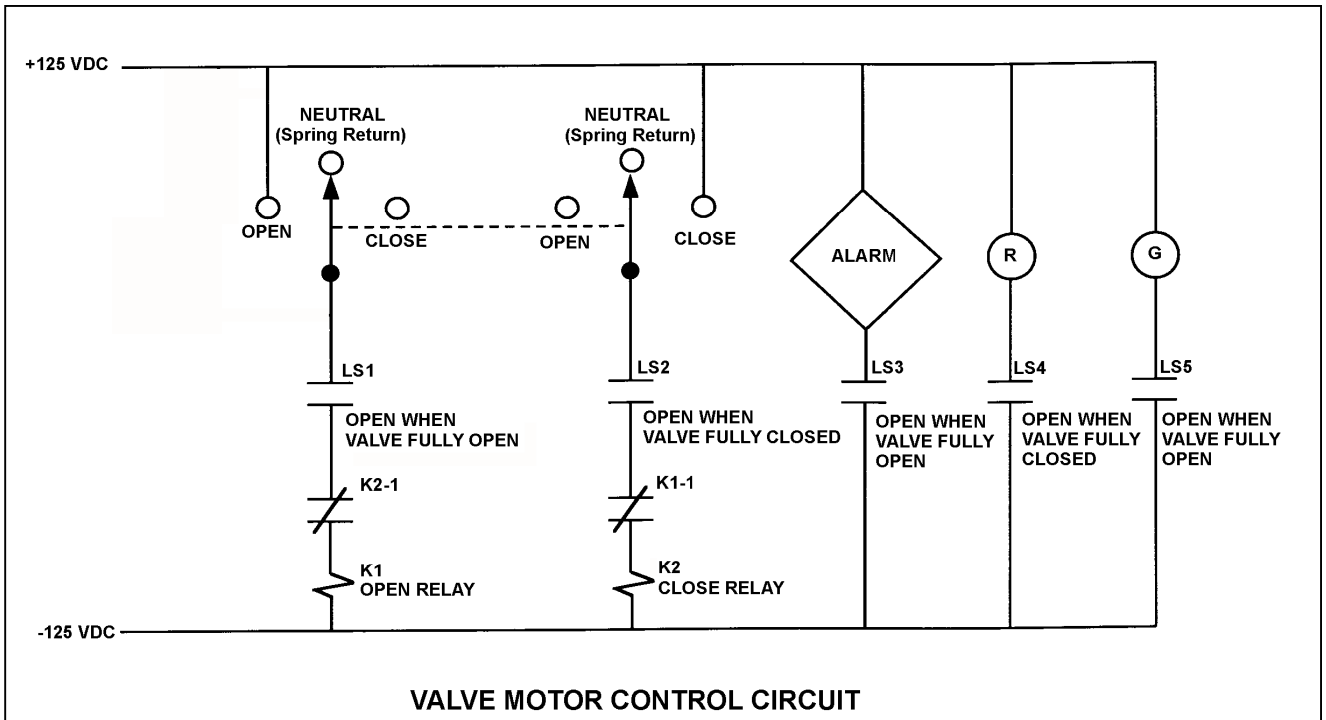

VALVE MOTOR CONTROL CIRCUIT

TOPIC: 191008
KNOWLEDGE: K1.06 [2.3/2.6]
QID: P4221 (B4221)

Refer to the drawing of a motor and its control circuit (see figure below).

Note: Relay contacts are shown open/closed according to the standard convention for control circuit drawings.

How are the starting resistors employed before and after the motor is energized?

A. Inserted before the motor is energized; simultaneously bypassed after the motor gains speed.

B. Inserted before the motor is energized; sequentially bypassed as the motor gains speed.

C. Bypassed before the motor is energized; simultaneously inserted after the motor gains speed.

D. Bypassed before the motor is energized; sequentially inserted as the motor gains speed.

ANSWER: A.

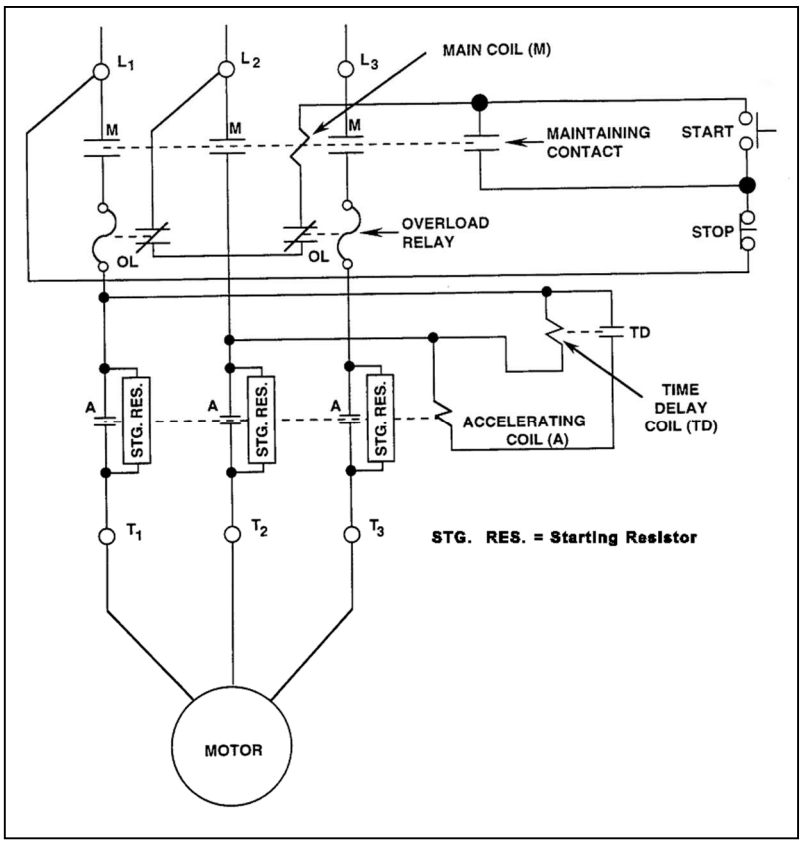

TOPIC: 191008
KNOWLEDGE: K1.06 [2.3/2.6]
QID: P4421 (B4421)

Refer to the drawing of a motor and its control circuit (see figure below).

Note: Relay contacts are shown open/closed according to the standard convention for control circuit drawings.

The motor has been operating for several hours when it is decided to stop the motor. What is the status of the starting resistors before and after the motor STOP pushbutton is depressed?

A. Initially inserted in the motor circuit; bypassed immediately after the STOP pushbutton is depressed.

B. Initially inserted in the motor circuit; bypassed following a preset time delay after the STOP pushbutton is depressed.

C. Initially bypassed; bypass is removed immediately after the STOP pushbutton is depressed.

D. Initially bypassed; bypass is removed following a preset time delay after the STOP pushbutton is depressed.

ANSWER: C.

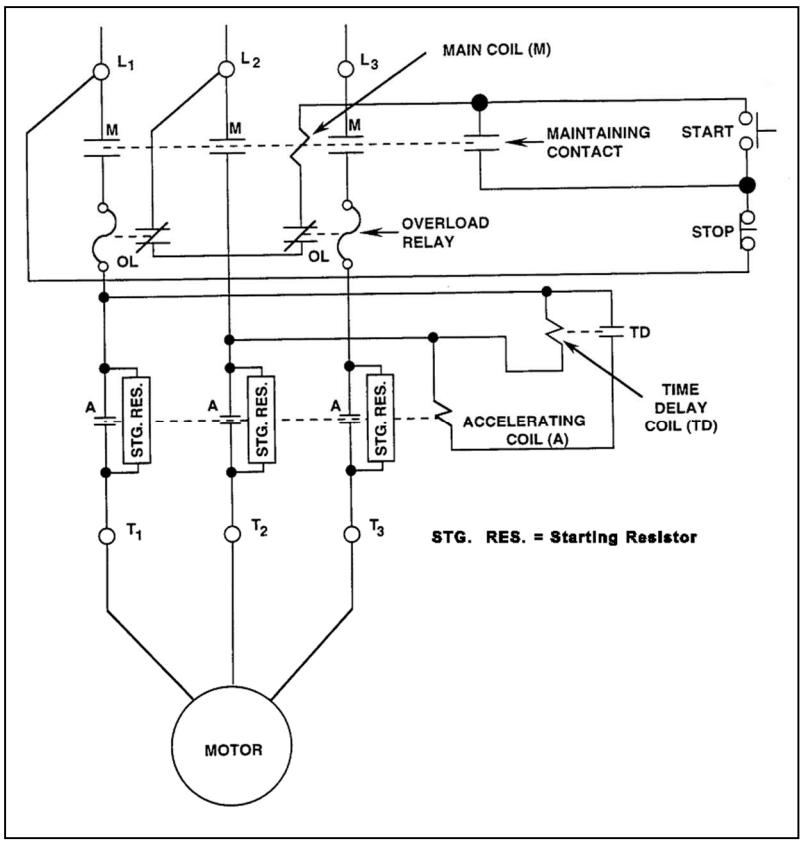

TOPIC: 191008
KNOWLEDGE: K1.06 [2.3/2.6]
QID: P4521 (B4521)

Refer to the drawing of a valve motor control circuit (see figure below) for a valve that is currently fully closed and has a 10-second stroke time.

Note: Limit switch (LS) contacts are shown open regardless of valve position, but relay contacts are shown open/closed according to the standard convention for control circuit drawings.

Which one of the following describes the valve response if the control switch is taken to the OPEN position for two seconds and then released?

A. The valve will not move.

B. The valve will open fully.

C. The valve will begin to open and then stop moving.

D. The valve will begin to open and then close fully.

ANSWER: C.

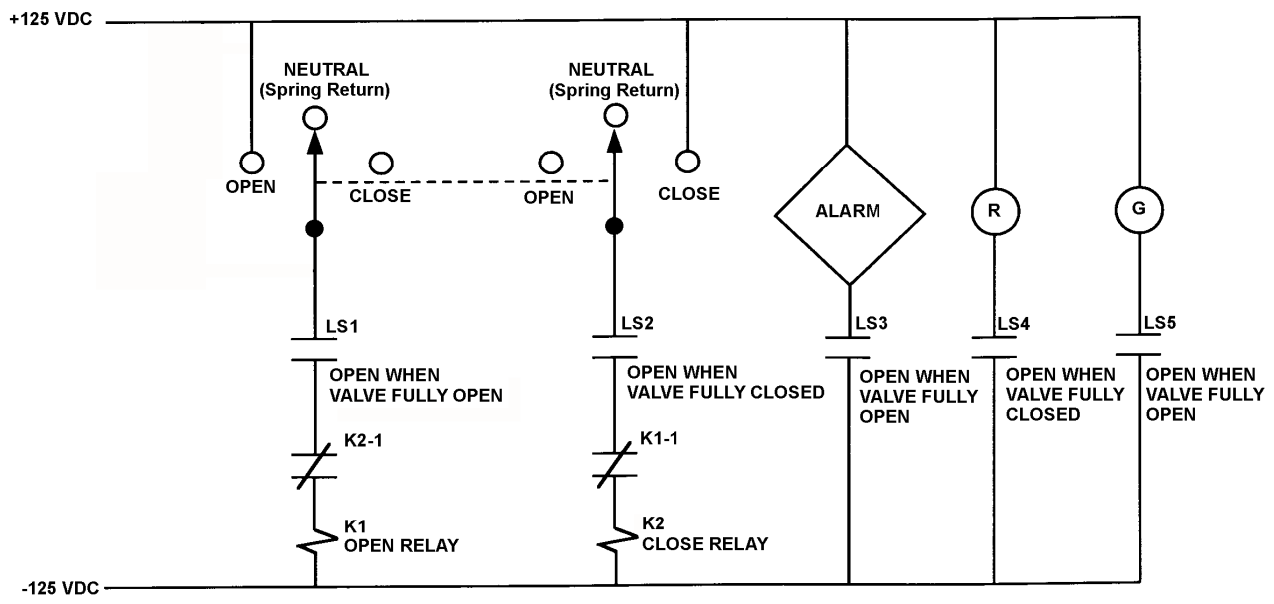

VALVE MOTOR CONTROL CIRCUIT

TOPIC: 191008
KNOWLEDGE: K1.06 [2.3/2.6]
QID: P5120 (B5121)

Refer to the drawing of a motor and its control circuit (see figure below).

Note: Relay contacts are shown open/closed according to the standard convention for control circuit drawings.

The motor has been idle for several days when it is decided to start the motor. What is the status of the starting resistors before and after the motor START pushbutton is depressed?

A. Initially bypassed; bypass is removed immediately after the START pushbutton is depressed.

B. Initially bypassed; bypass is removed following a preset time delay after the START pushbutton is depressed.

C. Initially inserted in the motor circuit; bypassed immediately after the START pushbutton is depressed.

D. Initially inserted in the motor circuit; bypassed following a preset time delay after the START pushbutton is depressed.

ANSWER: D.

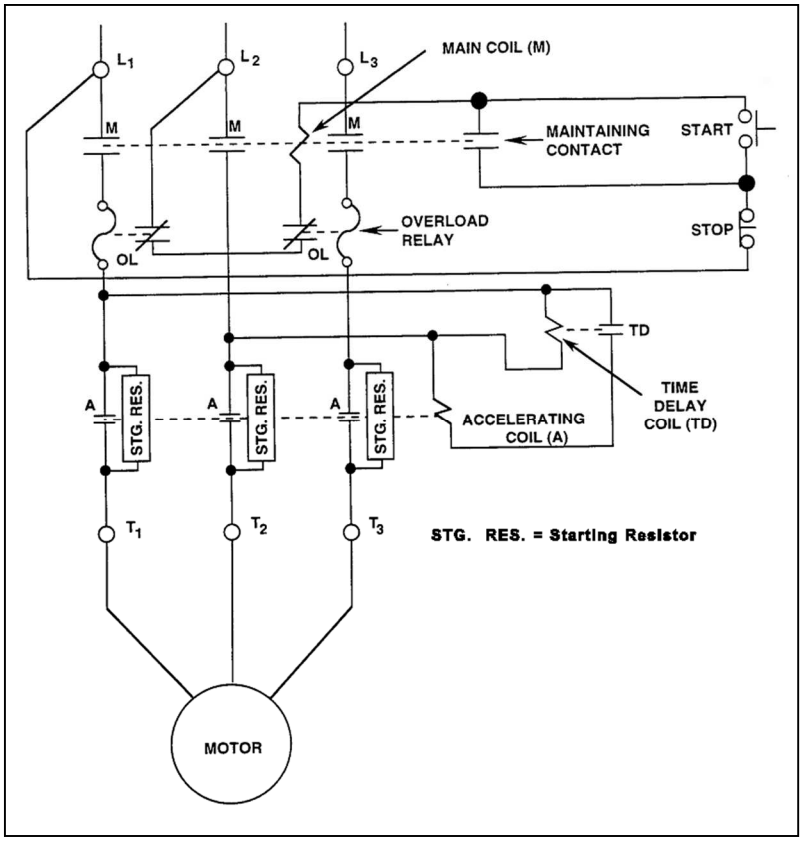

TOPIC: 191008
KNOWLEDGE: K1.06 [2.3/2.6]
QID: P5221 (B5222)

Refer to the drawing of a valve motor control circuit (see figure below) for a valve that is currently fully open and has a 10-second stroke time.

Note: Limit switch (LS) contacts are shown open regardless of valve position, but relay contacts are shown open/closed according to the standard convention for control circuit drawings.

The operator takes the control switch to CLOSE. Two seconds later, after verifying the valve is closing, the operator releases the control switch. Which one of the following describes the valve motor control circuit alarm response after the switch is released?

A. The alarm will continue to actuate for approximately 8 seconds.

B. The alarm will continue to actuate until additional operator action is taken.

C. The alarm will actuate after approximately 8 seconds.

D. The alarm will <u>not</u> actuate until additional operator action is taken.

ANSWER: B.

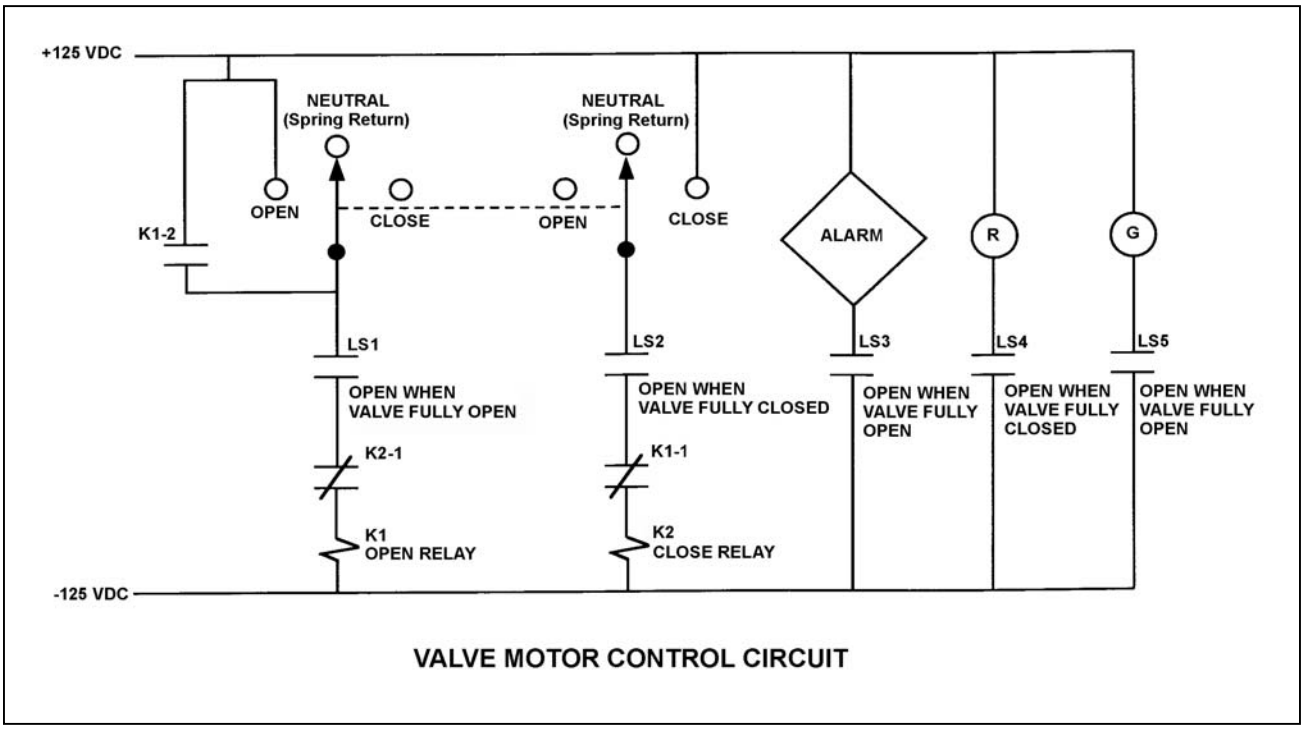

VALVE MOTOR CONTROL CIRCUIT

TOPIC: 191008
KNOWLEDGE: K1.06 [2.3/2.6]
QID: P5421 (B5421)

Refer to the drawing of a valve motor control circuit (see figure below).

Note: Limit switch (LS) contacts are shown open regardless of valve position, but relay contacts are shown open/closed according to the standard convention for control circuit drawings.

Which one of the following will actuate the alarm?

A. With the valve partially closed, the control switch is taken to the CLOSE position.

B. With the valve partially closed, the control switch is taken to the OPEN position.

C. With the valve fully open, the control switch is taken to the CLOSE position.

D. With the valve fully open, the control switch is taken to the OPEN position.

ANSWER: B.

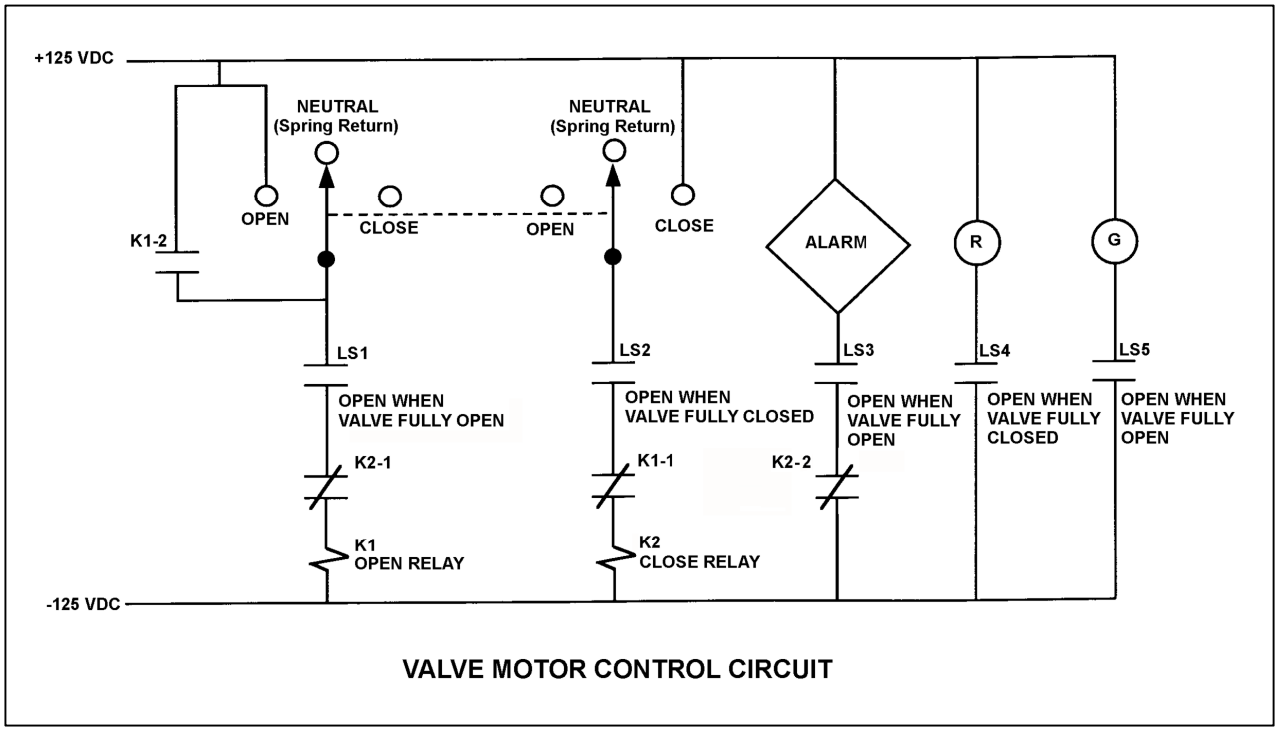

VALVE MOTOR CONTROL CIRCUIT

TOPIC: 191008
KNOWLEDGE: K1.06 [2.3/2.6]
QID: P5920 (B5922)

Refer to the drawing of a valve motor control circuit (see figure below) for a valve that is currently fully open and has a 10-second stroke time.

Note: Limit switch (LS) contacts are shown open regardless of valve position, but relay contacts are shown open/closed according to the standard convention for control circuit drawings.

The operator takes the control switch to CLOSE momentarily and the valve begins to close. Five seconds later, the operator takes the switch to OPEN momentarily and then releases the switch. Which one of the following describes the valve response after the switch is released?

A. The valve will stop closing and remain partially open.

B. The valve will stop closing and then go fully open.

C. The valve will close fully and remain fully closed.

D. The valve will close fully and then go fully open.

ANSWER: C.

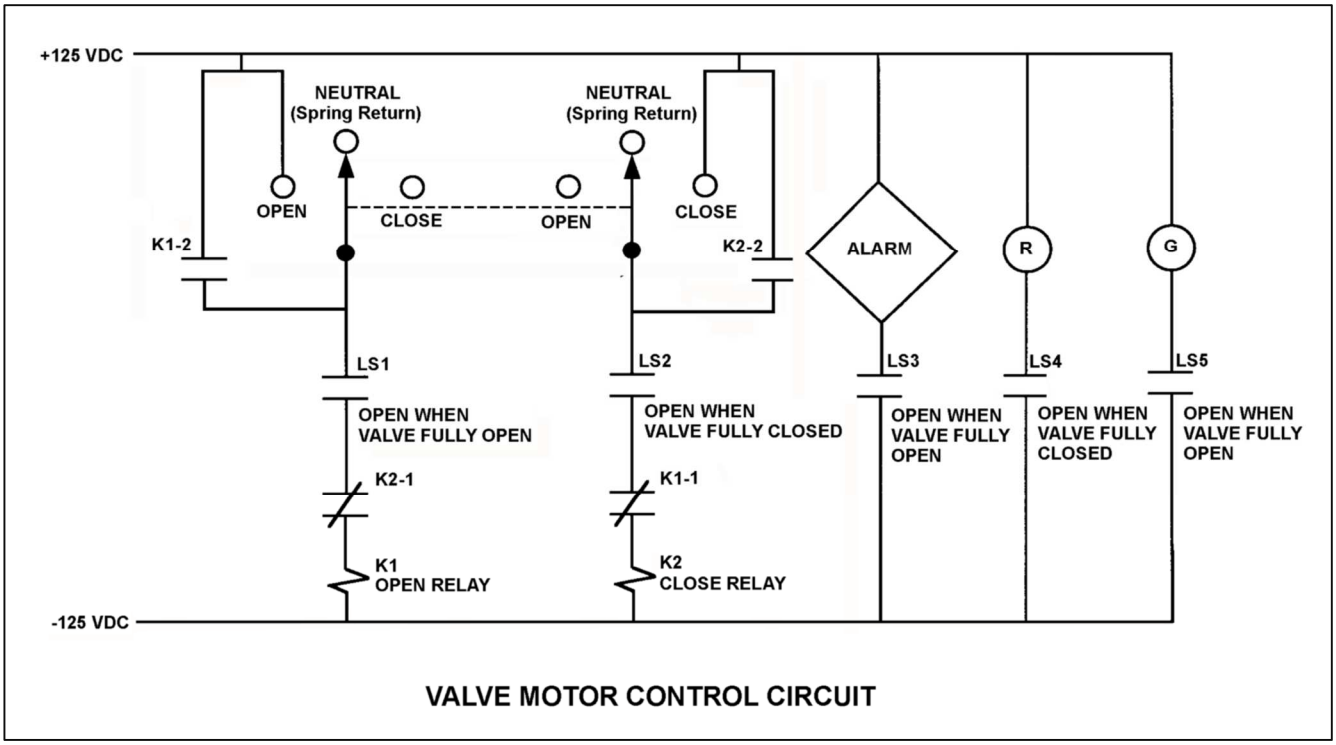

VALVE MOTOR CONTROL CIRCUIT

TOPIC: 191008
KNOWLEDGE: K1.06 [2.3/2.6]
QID: P6820 (B6822)

Refer to the drawing of a valve motor control circuit (see figure below) for a valve that is currently fully closed and has a 10-second stroke time.

Note: Limit switch (LS) contacts are shown open regardless of valve position, but relay contacts are shown open/closed according to the standard convention for control circuit drawings.

An operator takes the control switch to OPEN momentarily and the valve begins to open. Five seconds later, the operator takes the control switch to CLOSE momentarily and releases the switch. Which one of the following describes the valve response when the control switch is taken to CLOSE momentarily and released?

A. The valve will stop opening and remain partially open.

B. The valve will stop opening and then go fully closed.

C. The valve will open fully and remain fully open.

D. The valve will open fully and then go fully closed.

ANSWER: A.

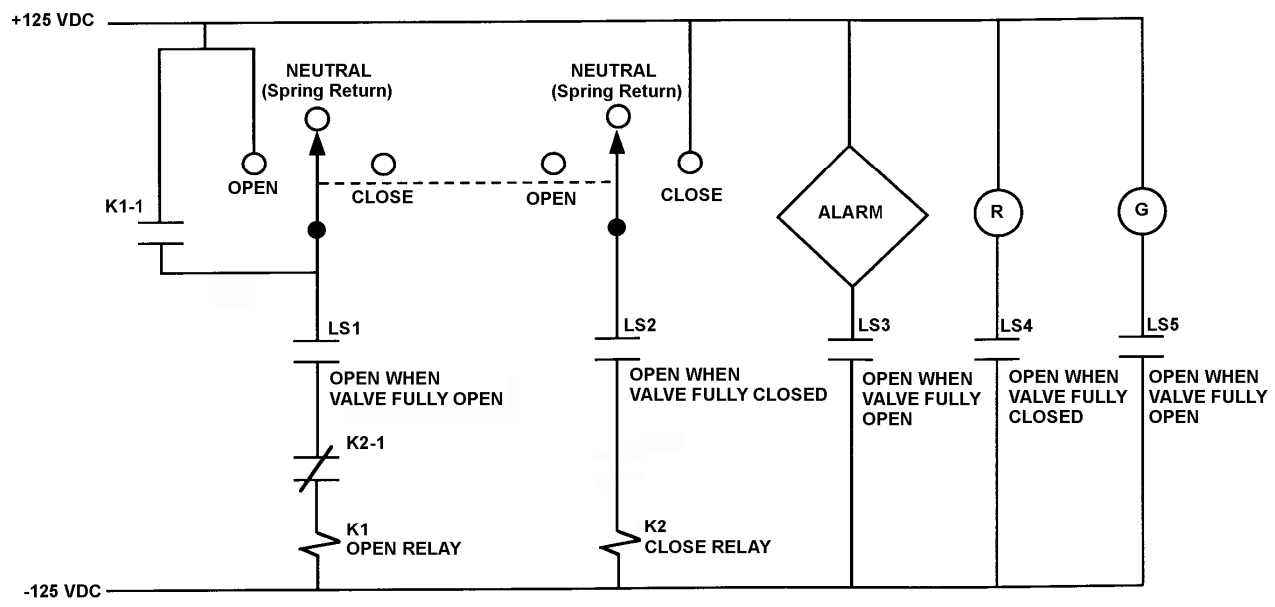

VALVE MOTOR CONTROL CIRCUIT

TOPIC: 191008
KNOWLEDGE: K1.06 [2.3/2.6]
QID: P7122 (B7121)

Refer to the drawing of a valve motor control circuit (see figure below) for a valve that is currently fully closed and has a 10-second stroke time.

Note: Limit switch (LS) contacts are shown open regardless of valve position, but relay contacts are shown open/closed according to the standard convention for control circuit drawings.

The operator takes the control switch to OPEN momentarily and the valve begins to open. Five seconds later, the operator takes the switch to CLOSE momentarily and then releases the switch. Which one of the following describes the valve response after the switch is released?

A. The valve will stop opening and remain partially open.

B. The valve will stop opening and then go fully closed.

C. The valve will open fully and remain fully open.

D. The valve will open fully and then go fully closed.

ANSWER: C.

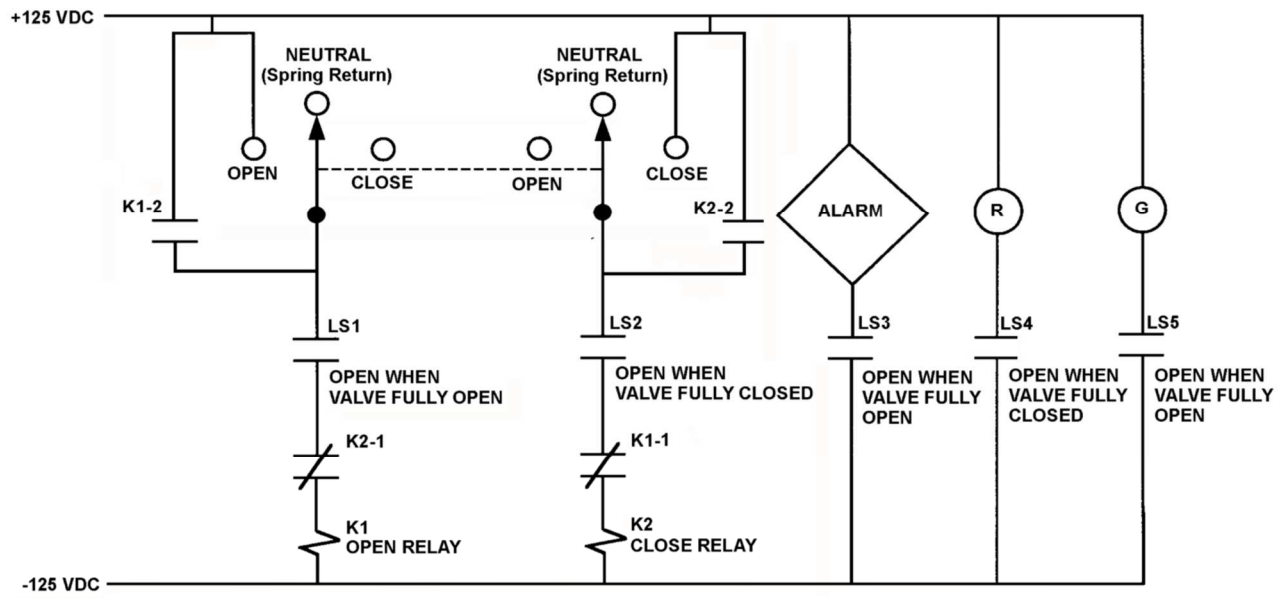

VALVE MOTOR CONTROL CIRCUIT

TOPIC: 191008
KNOWLEDGE: K1.06 [2.3/2.6]
QID: P7421 (B7421)

Refer to the drawing of a valve motor control circuit (see figure below) for a valve that is currently fully open and has a 10-second stroke time.

Note: Limit switch (LS) contacts are shown open regardless of valve position, but relay contacts are shown open/closed according to the standard convention for control circuit drawings.

The operator takes the control switch to CLOSE. Two seconds later, after verifying the valve is closing, the operator releases the control switch. Which one of the following describes the valve motor control circuit alarm response after the switch is released?

A. The alarm will continue to actuate for approximately 8 seconds.

B. The alarm will continue to actuate until additional operator action is taken.

C. The alarm will actuate after approximately 8 seconds.

D. The alarm will <u>not</u> actuate until additional operator action is taken.

ANSWER: A.

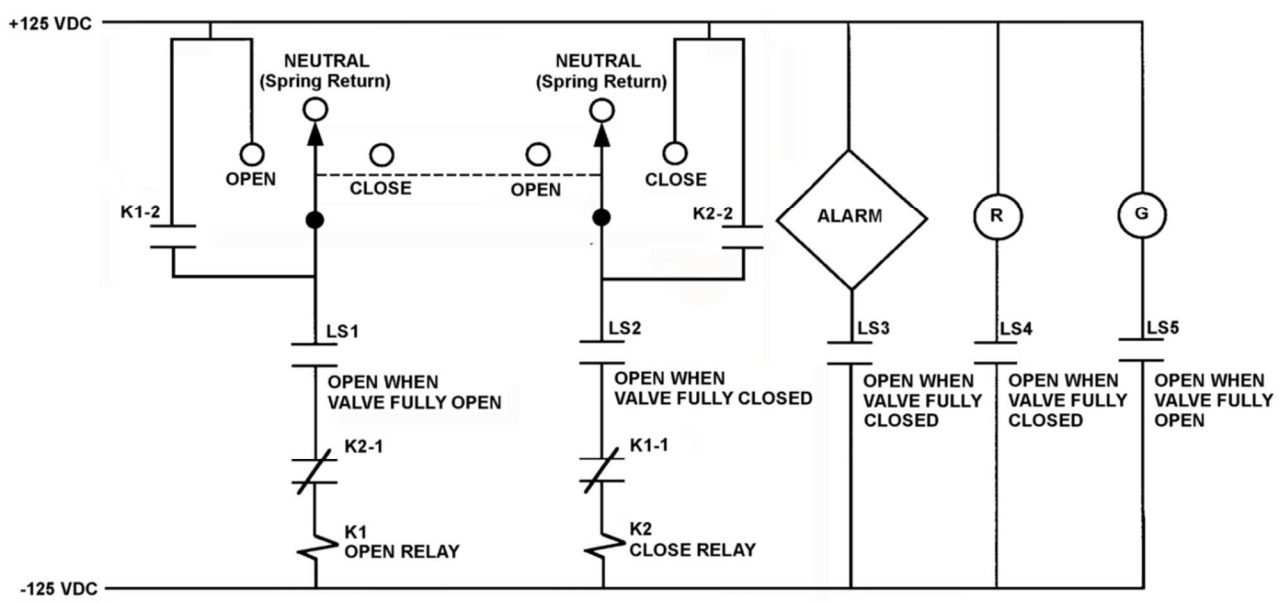

VALVE MOTOR CONTROL CIRCUIT

TOPIC: 191008
KNOWLEDGE: K1.06 [2.3/2.6]
QID: P7646 (B7646)

Refer to the drawing of a valve motor control circuit (see figure below) for a valve that is currently fully open and has a 16-second stroke time.

Note: Limit switch (LS) contacts are shown open regardless of valve position, but relay contacts are shown open/closed according to the standard convention for control circuit drawings.

An operator takes the control switch to CLOSE. Two seconds later, after verifying the valve is closing, the operator releases the control switch. When the valve stops moving, what will be the status of the alarm and the red (R) and green (G) indicating lights?

	Alarm	Red Ind. Light	Green Ind. Light
A.	On	On	On
B.	On	Off	On
C.	Off	On	Off
D.	Off	Off	Off

ANSWER: A.

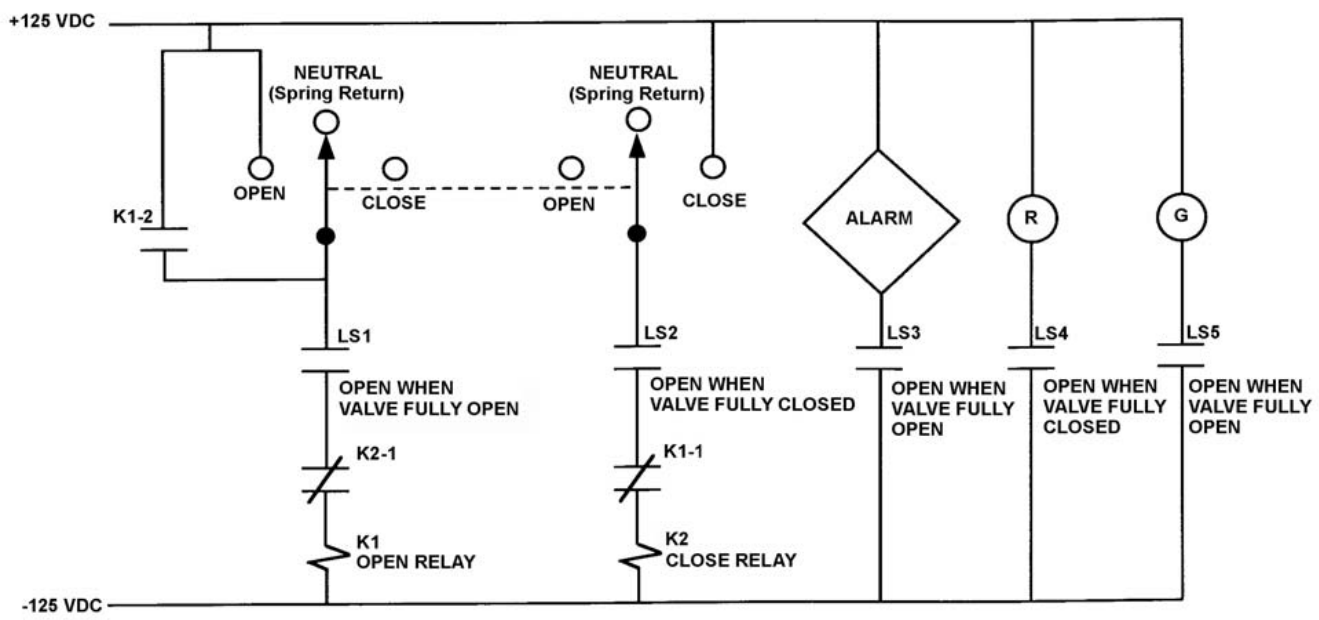

VALVE MOTOR CONTROL CIRCUIT

TOPIC: 191008
KNOWLEDGE: K1.06 [2.3/2.6]
QID: P7666 (B7666)

Refer to the drawing of a valve motor control circuit (see figure below) for a valve that is currently fully open and has a 10-second stroke time.

Note: Limit switch (LS) contacts are shown open regardless of valve position, but relay contacts are shown open/closed according to the standard convention for control circuit drawings.

The operator takes the control switch to CLOSE. Two seconds later, after verifying the valve is closing, the operator releases the control switch. Which one of the following describes the valve motor control circuit alarm response after the switch is released?

A. The alarm will actuate after approximately 8 seconds.

B. The alarm will <u>not</u> actuate until additional operator action is taken.

C. The alarm will continue to actuate for approximately 8 seconds.

D. The alarm will continue to actuate until additional operator action is taken.

ANSWER: B.

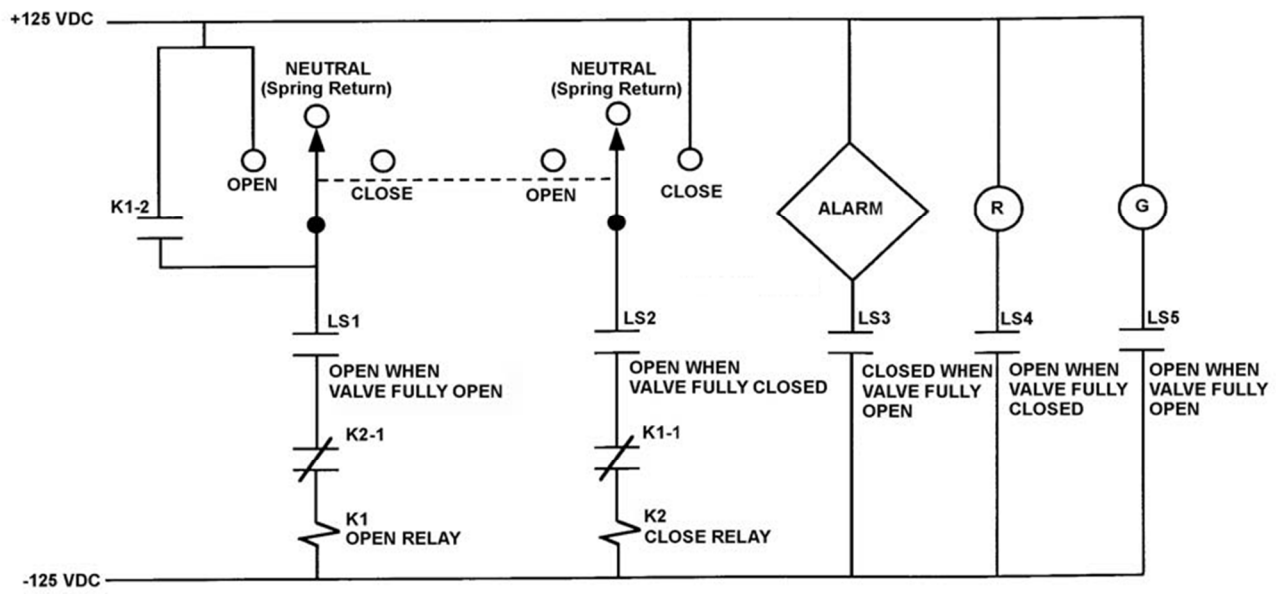

VALVE MOTOR CONTROL CIRCUIT

TOPIC: 191008
KNOWLEDGE: K1.06 [2.3/2.6]
QID: P7686 (B7686)

Refer to the drawing of a valve motor control circuit (see figure below) for a valve that is currently fully open and has a 16-second stroke time.

Note: Limit switch (LS) contacts are shown open regardless of valve position, but relay contacts are shown open/closed according to the standard convention for control circuit drawings.

An operator takes the control switch to CLOSE. Two seconds later, after verifying the valve is closing, the operator releases the control switch. When the valve stops moving, what will be the status of the alarm and the red (R) and green (G) indicating lights?

	Alarm	Red Ind. Light	Green Ind. Light
A.	On	On	On
B.	On	Off	Off
C.	Off	On	Off
D.	Off	Off	On

ANSWER: D.

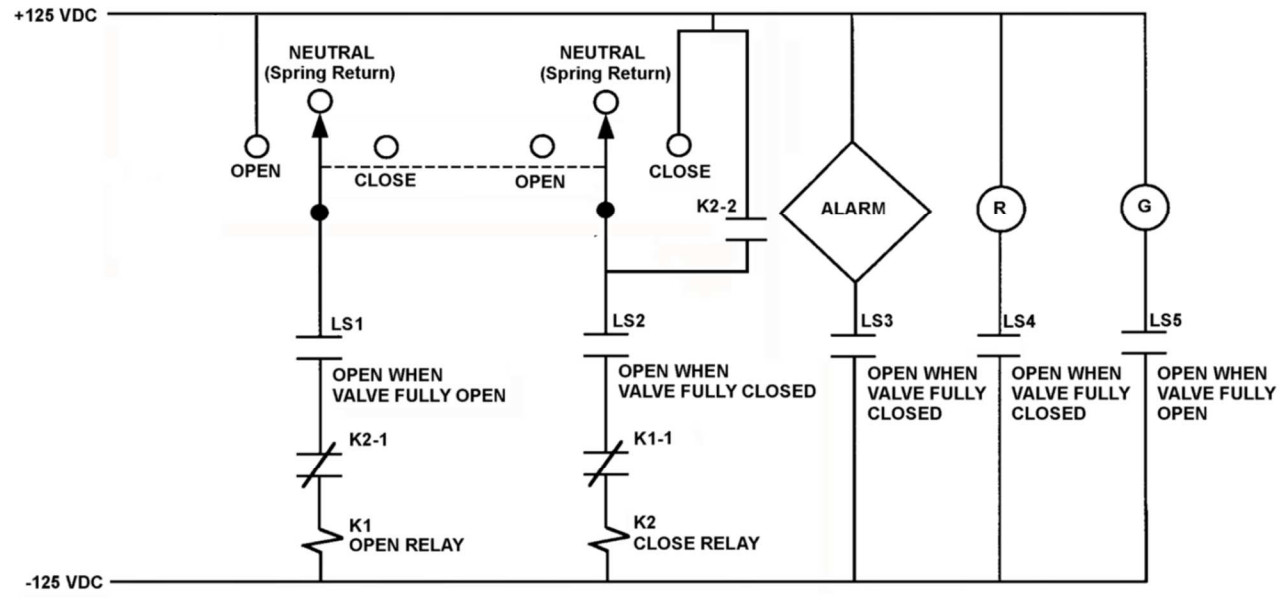

VALVE MOTOR CONTROL CIRCUIT

TOPIC: 191008
KNOWLEDGE: K1.07 [3.0/3.3]
QID: P1141 (B1142)

Which one of the following is an unsafe practice if performed while working on or near energized electrical equipment?

A. Using two hands for balance and to prevent dropping tools onto energized equipment.

B. Standing on insulating rubber material to increase the electrical resistance of the body to ground.

C. Having a person stand by to deenergize the equipment in the event of an emergency.

D. Covering exposed energized circuits with insulating material to prevent inadvertent contact.

ANSWER: A.

TOPIC: 191008
KNOWLEDGE: K1.07 [3.0/3.3]
QID: P1241 (B842)

A 480 VAC motor is supplied power via an electrical disconnect in series with a breaker. Which one of the following describes the proper operations to isolate power to the motor?

A. Open the disconnect first, then the breaker.

B. Open the breaker first, then the disconnect.

C. Open the device that is closest to the motor first.

D. Open the device that is closest to the power source first.

ANSWER: B.

TOPIC: 191008
KNOWLEDGE: K1.07 [3.0/3.3]
QID: P2940 (B3141)

Which one of the following is an unsafe practice if performed while working on or near energized electrical equipment?

A. Use insulated tools to prevent inadvertent contact with adjacent equipment.

B. Cover exposed energized circuits with insulating material to prevent inadvertent contact.

C. Attach a metal strap from your body to a nearby neutral ground to ensure that you are grounded.

D. Have a person standing by with the ability to remove you from the equipment in the event of an emergency.

ANSWER: C.

TOPIC: 191008
KNOWLEDGE: K1.08 [3.3/3.5]
QID: P41 (B342)

The primary reason for isolating emergency electrical loads from their power supply bus prior to energizing the bus via the emergency diesel generator is to prevent an...

A. overcurrent condition on the generator.

B. overcurrent condition on the loads.

C. underfrequency condition on the generator.

D. underfrequency condition on the loads.

ANSWER: A.

TOPIC: 191008
KNOWLEDGE: K1.08 [3.3/3.5]
QID: P43 (B1941)

A main generator is being connected to an infinite power grid that is operating at 60 Hz. Generator output voltage is equal to the grid voltage but generator frequency is at 57 Hz.

Which one of the following generator conditions is most likely to occur if the generator output breaker is closed with voltages in phase (synchronized), but with the existing frequency difference? (Assume no generator breaker protective trip occurs.)

A. Reverse power

B. Underfrequency

C. Undervoltage

D. Overspeed

ANSWER: A.

TOPIC: 191008
KNOWLEDGE: K1.08 [3.3/3.5]
QID: P107 (B122)

Closing the output breaker of a three-phase generator onto a deenergized bus can...

A. produce an overvoltage condition on the bus.

B. produce an overcurrent condition on the generator if the bus was not first unloaded.

C. result in a reverse power trip of the generator circuit breaker if generator frequency is low.

D. result in large reactive currents in the generator.

ANSWER: B.

TOPIC: 191008
KNOWLEDGE: K1.08 [3.3/3.5]
QID: P241 (B1843)

A main generator is being paralleled to an infinite power grid. Closing the output breaker of the generator with the frequency of the generator 0.1 Hz higher than grid frequency will result in the generator...

A. behaving as a real load to the grid.

B. behaving as a reactive load to the grid.

C. supplying a portion of the grid reactive load.

D. supplying a portion of the grid real load.

ANSWER: D.

TOPIC: 191008
KNOWLEDGE: K1.08 [3.3/3.5]
QID: P242 (B243)

Which one of the following generator conditions is most likely to result in equipment damage from high current flow?

A. Tripping the output breaker under full-load conditions.

B. Tripping the generator prime mover under full-load conditions.

C. Closing the output breaker onto a bus that has a short-circuit fault.

D. Closing the output breaker onto a bus that has an open-circuit fault.

ANSWER: C.

TOPIC: 191008
KNOWLEDGE: K1.08 [3.3/3.5]
QID: P340

A main generator is about to be connected to an infinite power grid. Closing the generator output breaker with the generator voltage slightly lower than grid voltage and with generator frequency slightly higher than grid frequency will initially result in: (Assume no generator breaker protective trip occurs.)

A. the generator supplying reactive power to the grid.

B. the generator attaining a leading power factor.

C. the generator acting as a real load to the grid.

D. motoring of the generator.

ANSWER: B.

TOPIC: 191008
KNOWLEDGE: K1.08 [3.3/3.5]
QID: P341 (B343)

A main generator is being paralleled to the power grid. Generator voltage has been properly adjusted and the synchroscope is rotating slowly in the clockwise direction.

The generator breaker must be closed just as the synchroscope pointer reaches the 12 o'clock position to prevent...

A. motoring of the generator, due to unequal frequencies.

B. excessive MW load transfer to the generator, due to unequal frequencies.

C. excessive MW load transfer to the generator, due to out-of-phase voltages.

D. excessive arcing within the generator output breaker, due to out-of-phase voltages.

ANSWER: D.

TOPIC: 191008
KNOWLEDGE: K1.08 [3.3/3.5]
QID: P441 (B440)

During paralleling operations of the main generator to an infinite power grid, closing the generator output breaker with the frequency of the generator at 61 hertz and the grid frequency at 60 hertz will...

A. cause the generator to immediately increase load.

B. trip open the generator breaker on reverse power.

C. cause the generator voltage to increase.

D. cause the generator current to decrease.

ANSWER: A.

TOPIC: 191008
KNOWLEDGE: K1.08 [3.3/3.5]
QID: P743 (B743)

Which one of the following evolutions will draw the highest current from the main generator during operation of the output breaker?

A. Opening the output breaker under full-load conditions.

B. Opening the output breaker under no-load conditions.

C. Closing the output breaker with voltages out of phase.

D. Closing the output breaker with voltages in phase.

ANSWER: C.

TOPIC: 191008
KNOWLEDGE: K1.08 [3.3/3.5]
QID: P940

Under which one of the following preexisting conditions will closing a circuit breaker between two electrical generators cause a sudden large and possibly damaging mechanical torque to be exerted on both of the generators?

A. One generator is supplying a 3 percent higher voltage than the other.

B. One generator is supplying a 3 percent higher frequency than the other.

C. The voltage of one generator is out of phase with the other by 30°.

D. The capacity of one generator is twice that of the other generator.

ANSWER: C.

TOPIC: 191008
KNOWLEDGE: K1.08 [3.3/3.5]
QID: P1143 (B1143)

A main generator is about to be connected to an infinite power grid with the following conditions:

Generator frequency	=	59.5 Hz
Grid frequency:	=	59.8 Hz
Generator voltage:	=	115.1 KV
Grid voltage:	=	114.8 KV

When the generator output breaker is closed, the generator will...

A. acquire real load and reactive load.

B. acquire real load but become a reactive load to the grid.

C. become a real load to the grid but acquire reactive load.

D. become a real load and a reactive load to the grid.

ANSWER: C.

TOPIC: 191008
KNOWLEDGE: K1.08 [3.3/3.5]
QID: P1242

A main generator is about to be connected to an infinite power grid. Closing the generator output breaker with generator and grid voltages matched, but with generator frequency lower than grid frequency will initially result in the generator...

A. picking up a portion of the grid real load.

B. picking up a portion of the grid reactive load.

C. experiencing reverse power conditions.

D. experiencing overspeed conditions.

ANSWER: C.

TOPIC: 191008
KNOWLEDGE: K1.08 [3.3/3.5]
QID: P1342

A main generator is about to be connected to an infinite power grid. Closing the generator output breaker with the _____ of the generator higher than that of the grid will initially result in generator real load _____.

A. frequency; decreasing

B. frequency; increasing

C. voltage; decreasing

D. voltage; increasing

ANSWER: B.

TOPIC: 191008
KNOWLEDGE: K1.08 [3.3/3.5]
QID: P1542

A main generator is about to be connected to an infinite power grid. Closing the generator output breaker with generator and grid voltages matched, but with generator frequency 0.1 Hz higher than grid frequency will initially result in the generator...

A. picking up a portion of the grid real load.

B. picking up a portion of the grid reactive load.

C. experiencing reverse power conditions.

D. experiencing overspeed conditions.

ANSWER: A.

TOPIC: 191008
KNOWLEDGE: K1.08 [3.3/3.5]
QID: P1642

A main generator is about to be connected to an infinite power grid with the following conditions:

Generator frequency	= 59.8 Hz
Grid frequency	= 59.5 Hz
Generator voltage	= 114.8 KV
Grid voltage	= 115.1 KV

When the generator output breaker is closed, the generator will initially...

A. acquire real load and reactive load.

B. acquire real load, but become a reactive load to the grid.

C. become a real load to the grid, but acquire reactive load.

D. become a real load and a reactive load to the grid.

ANSWER: B.

TOPIC: 191008
KNOWLEDGE: K1.08 [3.3/3.5]
QID: P1741 (B1744)

A main generator is being paralleled to an infinite power grid. Generator voltage has been properly adjusted and the synchroscope is rotating slowly in the counterclockwise direction.

If the generator breaker is closed just prior to the synchroscope pointer reaching the 12 o'clock position, which one of the following is most likely to occur?

A. The breaker will close and the generator will supply only MW to the grid.

B. The breaker will close and the generator will supply both MW and MVAR to the grid.

C. The breaker will close and then open due to overcurrent.

D. The breaker will close and then open due to reverse power.

ANSWER: D.

TOPIC: 191008
KNOWLEDGE: K1.08 [3.3/3.5]
QID: P1839 (B43)

A main generator is being connected to an infinite power grid. Which one of the following will occur if the generator output breaker is closed with generator frequency 0.1 Hz lower than power grid frequency? (Assume that no generator protection relay actuates.)

A. The generator will motorize.

B. The generator will accept too much load.

C. The voltage of the generator will decrease to compensate for the lower frequency.

D. The entire connected system will operate at the frequency of the lowest frequency (the oncoming) generator.

ANSWER: A.

TOPIC: 191008
KNOWLEDGE: K1.08 [3.3/3.5]
QID: P1842 (B1240)

A main generator is being prepared for paralleling with an infinite power grid. Which one of the following indicates that the main generator and grid voltages are in phase?

A. The synchroscope pointer is at the 12 o'clock position.

B. The frequency of the generator is equal to the frequency of the grid.

C. The synchroscope pointer is turning slowly in the clockwise direction.

D. The synchroscope pointer is turning slowly in the counterclockwise direction.

ANSWER: A.

TOPIC: 191008
KNOWLEDGE: K1.08 [3.3/3.5]
QID: P2040 (B2042)

A main generator is about to be connected to an infinite power grid. Which one of the following conditions will cause the main generator to immediately supply reactive power (MVAR) to the grid when the generator output breaker is closed?

A. Generator voltage is slightly higher than grid voltage.

B. Generator voltage is slightly lower than grid voltage.

C. The synchroscope is turning slowly in the clockwise direction.

D. The synchroscope is turning slowly in the counterclockwise direction.

ANSWER: A.

TOPIC: 191008
KNOWLEDGE: K1.08 [3.3/3.5]
QID: P2044 (B2043)

Two identical 1,000 MW electrical generators are being connected to the same electrical bus. Generator A is currently supplying the bus. Generator A and B output indications are as follows:

Generator A	Generator B
4,160 Volts	4,140 Volts
60.2 Hertz	60.8 Hertz
25 MW	0 MW
10 MVAR	0 MVAR

When the output breaker for generator B is closed, which generator is more likely to trip on reverse power?

A. Generator A, due to the higher initial voltage.

B. Generator A, due to the lower initial frequency.

C. Generator B, due to the lower initial voltage.

D. Generator B, due to the higher initial frequency.

ANSWER: B.

TOPIC: 191008
KNOWLEDGE: K1.08 [3.3/3.5]
QID: P2143 (B2044)

A main generator is about to be connected to an infinite power grid. Generator voltage equals grid voltage and the synchroscope is rotating slowly in the clockwise direction. The generator breaker is closed just as the synchroscope pointer reaches the 12 o'clock position.

Which one of the following will occur after the breaker is closed?

A. The breaker will remain closed and the generator will supply only MW to the grid.

B. The breaker will remain closed and the generator will supply both MW and MVAR to the grid.

C. The breaker will trip open due to overcurrent.

D. The breaker will trip open due to reverse power.

ANSWER: A.

TOPIC: 191008
KNOWLEDGE: K1.08 [3.3/3.5]
QID: P2240

A main generator is being prepared for paralleling with an infinite power grid. Which one of the following indicates that the generator and grid voltages are in phase?

A. The voltage of the generator is equal to the voltage of the grid.

B. The frequency of the generator is equal to the frequency of the grid.

C. The synchroscope pointer is turning slowly in the clockwise direction.

D. The synchroscope pointer is passing through the 12 o'clock position.

ANSWER: D.

TOPIC: 191008
KNOWLEDGE: K1.08 [3.3/3.5]
QID: P2244

An isolated electrical bus is being supplied by generator A. Generator B is about to be connected to the same electrical bus. Generators A and B are both rated at 1,000 MW. Generator A and B output indications are as follows:

Generator A	Generator B
4,140 Volts	4,160 Volts
60.8 Hertz	60.2 Hertz
25 MW	0 MW
10 MVAR (out)	0 MVAR

When the output breaker for generator B is closed, which generator is more likely to trip on reverse power?

A. Generator A, due to the lower initial voltage.

B. Generator A, due to the higher initial frequency.

C. Generator B, due to the higher initial voltage.

D. Generator B, due to the lower initial frequency.

ANSWER: D.

TOPIC: 191008
KNOWLEDGE: K1.08 [3.3/3.5]
QID: P2343 (B2343)

A main generator is about to be connected to an infinite power grid. Generator voltage is slightly higher than grid voltage and the synchroscope is rotating slowly in the clockwise direction. The generator breaker is closed just as the synchroscope pointer reaches the 12 o'clock position.

Which one of the following will occur after the breaker is closed?

A. The breaker will remain closed and the generator will supply only MW to the grid.

B. The breaker will remain closed and the generator will supply both MW and MVAR to the grid.

C. The breaker will open due to overcurrent.

D. The breaker will open due to reverse power.

ANSWER: B.

TOPIC: 191008
KNOWLEDGE: K1.08 [3.3/3.5]
QID: P2440 (B2643)

A main generator is being prepared for paralleling with an infinite power grid. At which one of the following synchroscope pointer positions is the main generator output voltage the farthest out of phase with the grid voltage?

A. 3 o’clock

B. 6 o’clock

C. 9 o’clock

D. 12 o’clock

ANSWER: B.

TOPIC: 191008
KNOWLEDGE: K1.08 [3.3/3.5]
QID: P2441 (B2443)

A main generator is about to be connected to an infinite power grid. Generator voltage is equal to grid voltage and the synchroscope is rotating slowly in the counterclockwise direction. The generator breaker is closed just prior to the synchroscope pointer reaching the 12 o'clock position.

Which one of the following is most likely to occur after the breaker is closed?

A. The breaker will remain closed and the generator will supply only MW to the grid.

B. Thee breaker will remain closed and the generator will supply both MW and MVAR to the grid.

C. The breaker will open due to overcurrent.

D. The breaker will open due to reverse power.

ANSWER: D.

TOPIC: 191008
KNOWLEDGE: K1.08 [3.3/3.5]
QID: P2642 (B2843)

A main generator is about to be connected to an infinite power grid. Generator voltage is slightly higher than grid voltage and the synchroscope is rotating slowly in the clockwise direction. The generator breaker is closed just as the synchroscope pointer reaches the 3 o'clock position.

Which one of the following is most likely to occur after the breaker is closed?

A. The breaker will remain closed and the generator will supply only MW to the grid.

B. The breaker will remain closed and the generator will supply both MW and MVAR to the grid.

C. The breaker will open due to overcurrent.

D. The breaker will open due to reverse power.

ANSWER: C.

TOPIC: 191008
KNOWLEDGE: K1.08 [3.3/3.5]
QID: P2743 (B2742)

A main generator is being paralleled to an infinite power grid with the following conditions:

Generator frequency = 59.9 Hz
Grid frequency = 60.1 Hz
Generator voltage = 114.8 KV
Grid voltage = 115.1 KV

When the generator output breaker is closed, the generator will...

A. acquire real load and reactive load.

B. acquire real load, but become a reactive load to the grid.

C. become a real load to the grid, but acquire reactive load.

D. become a real load and a reactive load to the grid.

ANSWER: D.

TOPIC: 191008
KNOWLEDGE: K1.08 [3.3/3.5]
QID: P2943

A main generator is about to be connected to an infinite power grid with the following conditions:

Generator frequency = 60.1 Hz
Grid frequency = 59.9 Hz
Generator voltage = 115.1 KV
Grid voltage = 114.8 KV

When the generator output breaker is closed, the generator will...

A. acquire real load and reactive load.

B. acquire real load, but become a reactive load to the grid.

C. become a real load to the grid, but acquire reactive load.

D. become a real load and a reactive load to the grid.

ANSWER: A.

TOPIC: 191008
KNOWLEDGE: K1.08 [3.3/3.5]
QID: P3142 (B3130)

A nuclear power plant was initially operating at 80 percent power in the middle of a fuel cycle with the main generator connected to an infinite power grid with the following main generator output parameters:

60 Hz
25 KV
300 MVAR (out)
800 MW

A hydraulic oil system malfunction occurred that caused the main turbine steam inlet valves to slowly drift closed. After 10 minutes, the main generator real load decreased to 600 MW. Assuming no operator actions were taken, how were the remaining main generator output parameters affected after the above 10 minute period?

	Frequency (Hz)	Voltage (KV)	Reactive Load (MVAR)
A.	Decreased	Decreased	No change
B.	Decreased	No change	Decreased
C.	No change	No change	No change
D.	No change	Decreased	Decreased

ANSWER: C.

TOPIC: 191008
KNOWLEDGE: K1.08 [3.3/3.5]
QID: P3841 (B3842)

Which one of the following will cause the most damage to the contact surfaces of a main generator output breaker?

A. An operator attempts to close the main generator output breaker with the generator and power grid frequencies matched but with voltages 180 degrees out of phase.

B. An operator attempts to close the main generator output breaker with the generator and power grid voltages in phase but with generator frequency 0.5 percent higher than power grid frequency.

C. The main generator output breaker automatically trips open on a loss of offsite power while the main generator is operating at its minimum rated load.

D. The main generator output breaker automatically trips open on a loss of offsite power while the main generator is operating at its maximum rated load.

ANSWER: A.

TOPIC: 191008
KNOWLEDGE: K1.08 [3.3/3.5]
QID: P4321 (B4321)

A main generator is about to be connected to an infinite power grid. The main generator has the following initial conditions:

Generator frequency	= 59.9 Hz	Generator voltage	= 115.1 KV
Grid frequency	= 60.1 Hz	Grid voltage	= 114.8 KV

When the generator output breaker is closed, the generator will...

A. acquire real load and reactive load.

B. acquire real load, but become a reactive load to the grid.

C. become a real load and a reactive load to the grid.

D. become a real load to the grid, but acquire reactive load.

ANSWER: D.

TOPIC: 191008
KNOWLEDGE: K1.08 [3.3/3.5]
QID: P4322 (B4322)

During a routine inspection of a main generator output breaker, a technician discovers severely damaged main contact surfaces. Which one of the following is the most likely cause of the damaged contact surfaces?

A. The main generator breaker automatically tripped open after it was closed with the generator and power grid voltages 60 degrees out of phase.

B. The main generator breaker automatically tripped open due to a faulty trip relay actuation while the main generator was operating unloaded.

C. The main generator breaker automatically tripped open on a loss of offsite power while the main generator was operating at its maximum rated load.

D. The main generator breaker automatically tripped open after it was closed with the generator and power grid voltages in phase but with generator frequency 0.2 Hz lower than power grid frequency.

ANSWER: A.

TOPIC: 191008
KNOWLEDGE: K1.08 [3.3/3.5]
QID: P5121 (B5122)

A main generator is about to be connected to an infinite power grid. Generator output frequency is slightly higher than grid frequency and generator output voltage is equal to grid voltage.

Which one of the following situations will exist when the main generator electrical conditions stabilize immediately after the generator output breaker is closed? (Assume no additional operator actions are taken.)

A. Generator output current will be 0.

B. Generator power factor will be 0.

C. Generator output MVAR will be 0.

D. Generator output MW will be 0.

ANSWER: C.

TOPIC: 191008
KNOWLEDGE: K1.08 [3.3/3.5]
QID: P5620 (B5621)

A main generator is being connected to an infinite power grid. The following frequencies exist just prior to closing the generator output breaker:

Generator frequency = 59.9 Hz
Grid frequency = 60.1 Hz

When conditions stabilize just after the generator output breaker is closed, the generator frequency will be _____; and the grid frequency will be _____.

A. 59.9 Hz; 59.9 Hz

B. 59.9 Hz; 60.1 Hz

C. 60.0 Hz; 60.0 Hz

D. 60.1 Hz; 60.1 Hz

ANSWER: D.

TOPIC: 191008
KNOWLEDGE: K1.08 [3.3/3.5]
QID: P6321 (B6322)

A diesel generator (DG) was initially operating at 80 percent of rated load supplying an isolated electrical bus when a malfunction caused the DG output breaker to trip. The breakers for all of the bus loads--all of which are large motors--remained closed, preparing the motors to restart upon restoration of power to the bus.

The DG output breaker has been repaired. With all of the bus load breakers still closed, which one of the following will occur when the DG output breaker is closed to reenergize the bus?

A. The DG will become lightly loaded.

B. The DG will return directly to its initial load.

C. The DG will experience slight overload conditions.

D. The DG will experience severe overload conditions.

ANSWER: D.

TOPIC: 191008
KNOWLEDGE: K1.08 [3.3/3.5]
QID: P6722 (B6722)

A main generator output breaker is about to be closed to connect the main generator to the power grid via the main transformer. The main transformer voltage and frequency are as follows:

Voltage = 20,000 volts
Frequency = 60.0 Hz

Which combination of main generator voltage and frequency will ensure that the main generator will immediately supply real (MW) and reactive (MVAR) electrical power to the power grid when the main generator output breaker is closed?

A. 19,950 volts; 59.9 Hz

B. 19,950 volts; 60.1 Hz

C. 20,050 volts; 59.9 Hz

D. 20,050 volts; 60.1 Hz

ANSWER: D.

TOPIC: 191008
KNOWLEDGE: K1.08 [3.3/3.5]
QID: P7022 (B7022)

If a main generator output breaker is closed when the generator output voltage is 5 degrees out of phase with the power grid voltage, the main generator will experience a _____ stress; if the breaker remains closed and no additional operator action is taken, the main generator voltage will _____ with the grid voltage.

A. minor; remain out of phase

B. minor; become locked into phase

C. potentially damaging; remain out of phase

D. potentially damaging; become locked into phase

ANSWER: B.

TOPIC: 191008
KNOWLEDGE: K1.08 [3.3/3.5]
QID: P7626 (B7626)

If a main generator output breaker is closed when the generator output voltage is 90 degrees out of phase with the power grid voltage, the main generator will experience a _____ stress; if the breaker remains closed and no additional operator action is taken, the main generator voltage will _____ with the grid voltage.

A minor; remain out of phase

B. minor; become locked into phase

C. potentially damaging; remain out of phase

D. potentially damaging; become locked into phase

ANSWER: D.

TOPIC: 191008
KNOWLEDGE: K1.08 [3.3/3.5]
QID: P7636 (B7636)

The main generator output breaker was just closed to connect the main generator to the main transformer. Just before the breaker was closed, the following parameter values existed:

Main Generator	Main Transformer
20,000 volts	20,050 volts
60.0 Hz	59.9 Hz

With no additional operator action, the main generator stabilized with the following parameter values:

25 MW
15 MVAR (in)

Now consider this following alternate set of parameters values:

Main Generator	Main Transformer
20,020 volts	20,050 volts
60.1 Hz	59.9 Hz

If the alternate set of parameter values had existed just before the breaker was closed, the resulting main generator MW value would have been _____; and the resulting main generator MVAR (in) value would have been _____.

A. smaller; larger

B. smaller; smaller

C. larger; larger

D. larger; smaller

ANSWER: D.

TOPIC: 191008
KNOWLEDGE: K1.09 [2.8/3.1]
QID: P642 (B44)

When a typical 4,160 volt breaker is racked to the TEST position, control power is _____ the breaker; and the breaker is _____ the load.

A. removed from; isolated from

B. removed from; connected to

C. available to; isolated from

D. available to; connected to

ANSWER: C.

TOPIC: 191008
KNOWLEDGE: K1.09 [2.8/3.1]
QID: P938

Which one of the following functions or capabilities would remain following a loss of control power to a typical 480 VAC bus feeder breaker?

A. Remote breaker control capability

B. Breaker closing spring automatic recharging capability

C. Remote bus voltage indication

D. Remote breaker position indication

ANSWER: C.

TOPIC: 191008
KNOWLEDGE: K1.10 [2.7/3.1]
QID: P42

Which one of the following statements describes the use of high-voltage disconnect switches?

A. Their use should be limited to normal load current interruption.

B. They may be used to isolate transformers in an unloaded network.

C. They trip open like circuit breakers, but must be manually closed.

D. They must be closed with caution when under load because of possible arcing.

ANSWER: B.

TOPIC: 191008
KNOWLEDGE: K1.10 [2.7/3.1]
QID: P243 (B1842)

The function of high-voltage disconnect switches is to provide _____ electrical isolation of equipment during _____ conditions.

A. manual; no-load

B. manual; overload

C. automatic; no-load

D. automatic; overload

ANSWER: A.

TOPIC: 191008
KNOWLEDGE: K1.10 [2.7/3.1]
QID: P844 (B644)

High-voltage disconnect switches are used to...

A. adjust the output voltage range from a main power transformer.

B. protect bus feeder breakers by opening upon bus short-circuit faults.

C. provide equipment isolation under no-load conditions.

D. bypass and isolate an electrical bus while maintaining the downstream buses energized.

ANSWER: C.

TOPIC: 191008
KNOWLEDGE: K1.10 [2.7/3.1]
QID: P943 (B2244)

What is an advantage of using high-voltage disconnect switches instead of breakers to isolate main power transformers?

A. Disconnect switches can be operated either locally or remotely.

B. Disconnect switches provide direct visual indication that the circuit is broken.

C. Disconnect switches are cheaper and provide the same automatic protection as a breaker.

D. Disconnect switches are capable of interrupting a higher current flow with less heating than a breaker.

ANSWER: B.

TOPIC: 191008
KNOWLEDGE: K1.10 [2.7/3.1]
QID: P1043

Which one of the following describes a characteristic of high-voltage disconnect switches?

A. They close automatically requiring no operator action.

B. They should not be used to interrupt a circuit under load.

C. They require a remote means of indication to determine actual position.

D. They should be connected so that they ground the supply bus prior to opening a circuit.

ANSWER: B.

TOPIC: 191008
KNOWLEDGE: K1.10 [2.7/3.1]
QID: P1343

Typical high-voltage disconnect switches are designed to...

A. protect circuits during overcurrent conditions.

B. automatically trip open to protect breakers.

C. isolate equipment electrically during no-load conditions.

D. interrupt circuits under load.

ANSWER: C.

TOPIC: 191008
KNOWLEDGE: K1.10 [2.7/3.1]
QID: P1840 (B1544)

Typical high-voltage transformer disconnect switches are designed to...

A. automatically protect the transformer from overcurrent conditions.

B. automatically trip open prior to transformer output breaker trip.

C. manually isolate the transformer during no-load conditions.

D. manually interrupt the transformer output circuit under any load when grounds are detected.

ANSWER: C.

TOPIC: 191008
KNOWLEDGE: K1.10 [2.7/3.1]
QID: P2742 (B2744)

Refer to the simplified drawing of an electrical distribution system showing 7.2 KV switchgear, step-down transformers, and 480 V motor control centers (MCCs) (see figure below).

The high voltage side of each step-down transformer has a remote-operated disconnect to allow transformer maintenance while keeping the other transformers in service. The control circuit for each disconnect is position-interlocked with the associated MCC feeder breaker.

Which one of the following describes the purpose served by the interlock?

A. Prevent damage to the disconnect.

B. Prevent damage to the transformer.

C. Prevent damage to the feeder breaker.

D. Prevent damage to the 480V MCC.

ANSWER: A.

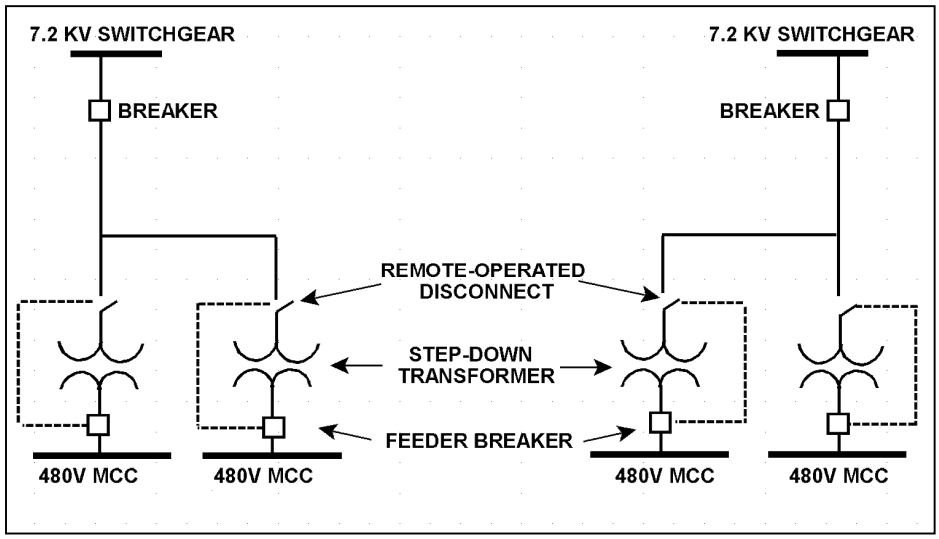

TOPIC: 191008
KNOWLEDGE: K1.10 [2.7/3.1]
QID: P2944 (B2944)

A 480 VAC motor control center supplies a load through a breaker and a manual disconnect switch. Which one of the following sequences will provide the greatest level of personnel safety when deenergizing the load for maintenance and when reenergizing the load after the maintenance?

	DEENERGIZING	REENERGIZING
A.	Open breaker first	Shut breaker first
B.	Open breaker first	Shut disconnect switch first
C.	Open disconnect switch first	Shut breaker first
D.	Open disconnect switch first	Shut disconnect switch first

ANSWER: B.

TOPIC: 191008
KNOWLEDGE: K1.10 [2.7/3.1]
QID: P3744 (B3744)

Refer to the simplified drawing of an electrical distribution system showing 7.2 KV switchgear, step-down transformers, and 480 V motor control centers (MCCs) (see figure below).

The high voltage side of each step-down transformer has a remote-operated disconnect. The control circuit for each disconnect is position-interlocked with the associated MCC feeder breaker. Which one of the following describes the interlock operating scheme that will provide the greatest protection for the disconnect?

A. Permits opening the feeder breaker only if the disconnect is closed.

B. Permits opening the feeder breaker only if the disconnect is open.

C. Permits opening the disconnect only if the feeder breaker is closed.

D. Permits opening the disconnect only if the feeder breaker is open.

ANSWER: D.

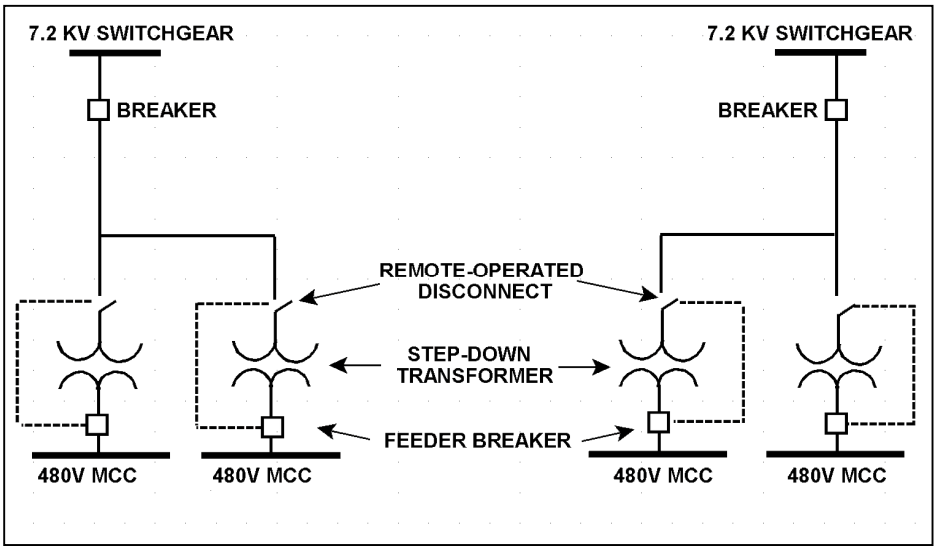

TOPIC: 191008
KNOWLEDGE: K1.11 [3.1/3.3]
QID: P239

The following remote indications are observed for a 480 VAC load center supply breaker. (The breaker is normally open.)

Red indicating light is lit.
Green indicating light is out.
Load center voltage indicates 0 volts.
Breaker incoming voltage indicates 480 volts.

What is the condition of the breaker?

A. Open and racked in

B. Closed and racked in

C. Open and racked to the TEST position

D. Closed and racked to the TEST position

ANSWER: D.

TOPIC: 191008
KNOWLEDGE: K1.11 [3.1/3.3]
QID: P244

The following indications are observed in the control room for a normally-open motor control center (MCC) breaker that directly starts/stops a 480 VAC motor:

Red position indicating light is out.
Green position indicating light is out.
Motor ammeter indicates normal load current.

Assuming one of the indicating lights is burned out, what is the condition of the breaker?

A. Open and racked in

B. Open and racked to the TEST position

C. Closed and racked in

D. Closed and racked to the TEST position

ANSWER: C.

TOPIC: 191008
KNOWLEDGE: K1.11 [3.1/3.3]
QID: P1044

The following indications are observed in the control room for a normally-open motor control center (MCC) breaker that directly starts/stops a 480 VAC motor:

Red position indicating light is lit.
Green position indicating light is out.
Motor load current indicates 0 amps.
MCC voltage indicates 480 volts.

What is the condition of the breaker?

A. Open and racked in

B. Closed and racked in

C. Open and racked to the TEST position

D. Closed and racked to the TEST position

ANSWER: D.

TOPIC: 191008
KNOWLEDGE: K1.11 [3.1/3.3]
QID: P1140

The following indications are observed in the control room for a normally-open breaker that directly starts/stops a 480 VAC motor:

Red position indicating light is lit.
Green position indicating light is out.
Load current indicates 50 amps.
Supply voltage indicates 480 volts.

What is the condition of the breaker?

A. Open and racked to the TEST position

B. Closed and racked to the TEST position

C. Open and racked in

D. Closed and racked in

ANSWER: D.

TOPIC: 191008
KNOWLEDGE: K1.11 [3.1/3.3]
QID: P1438 (B1440)

While remotely investigating the condition of a normally-open breaker that feeds a motor control center (MCC), an operator observes the following indications:

Green breaker position indicating light is out.
Red breaker position indicating light is lit.
MCC voltmeter indicates normal voltage.
MCC ammeter indicates zero amperes.

Based on these indications, the operator should report that the breaker is _____ and racked _____.

A. open; in

B. closed; in

C. open; out

D. closed; out

ANSWER: B.

TOPIC: 191008
KNOWLEDGE: K1.11 [3.1/3.3]
QID: P1838 (B2143)

While remotely investigating the condition of a typical normally-open motor control center (MCC) feeder breaker, an operator observes the following indications:

Green breaker position indicating light is lit.
Red breaker position indicating light is out.
MCC voltmeter indicates zero volts.
MCC ammeter indicates zero amperes.

Based on these indications, the operator can accurately report that the breaker is open and racked to _____ position.

A. the OUT

B. the IN

C. the TEST

D. an unknown

ANSWER: D.

TOPIC: 191008
KNOWLEDGE: K1.11 [3.1/3.3]
QID: P1932 (B2640)

While remotely investigating the condition of a normally-open 480 VAC motor control center (MCC) feeder breaker, an operator observes the following indications:

Green breaker position indicating light is out.
Red breaker position indicating light is lit.
MCC voltmeter indicates 480 VAC.
MCC ammeter indicates zero amperes.

Based on these indications, the operator should report that the feeder breaker is _____ and racked _____.

A. open; in

B. closed; in

C. open; to the TEST position

D. closed; to the TEST position

ANSWER: B.

TOPIC: 191008
KNOWLEDGE: K1.11 [3.1/3.3]
QID: P4120 (B4121)

Given the following indications for an open 4,160 VAC breaker:

All phase overcurrent trip flags are reset.
The control power fuses indicate blown.
The line-side voltmeter indicates 4,160 VAC.
The load-side voltmeter indicates 0 VAC.

Assuming no operator actions were taken since the breaker opened, which one of the following could have caused the breaker to open?

A. A ground fault caused an automatic breaker trip.

B. A loss of control power caused an automatic breaker trip.

C. An operator tripped the breaker manually at the breaker cabinet.

D. An operator tripped the breaker manually from a remote location.

ANSWER: C.

TOPIC: 191008
KNOWLEDGE: K1.11 [3.1/3.3]
QID: P6022 (B6021)

While remotely investigating the condition of a normally-open feeder breaker to a 480 VAC motor control center (MCC), a control room operator observes the following indications:

Green breaker position indicating light is out.
Red breaker position indicating light is lit.
MCC voltmeter indicates 0 VAC.
MCC ammeter indicates zero amperes.

Based on these indications, the operator should report that the feeder breaker is _____ and racked _____.

A. open; in

B. closed; out

C. open; to the TEST position

D. closed; to the TEST position

ANSWER: D.

TOPIC: 191008
KNOWLEDGE: K1.11 [3.1/3.3]
QID: P7222 (B7221)

While remotely investigating the condition of a normally-open 480 VAC motor control center (MCC) feeder breaker, an operator observes the following indications:

Green breaker position indicating light is out.
Red breaker position indicating light is lit.
MCC voltmeter indicates 480 VAC.
MCC ammeter indicates zero amperes.

Based on these indications, the operator should report that the feeder breaker is _____ and racked _____.

A. open; in

B. closed; in

C. open; to an unknown position

D. closed; to an unknown position

ANSWER: B.

TOPIC: 191008
KNOWLEDGE: K1.12 [2.9/2.9]
QID: P1444 (B2240)

Breaker local overcurrent trip flag indicators, when actuated, indicate that...

A. a breaker trip will occur unless current is reduced.

B. a breaker overcurrent condition is responsible for a breaker trip.

C. an overcurrent condition has cleared and the breaker can be closed.

D. the associated breaker has failed to trip open during an overcurrent condition.

ANSWER: B.

TOPIC: 191008
KNOWLEDGE: K1.12 [2.9/2.9]
QID: P3444 (B3440)

Given the following indications for an open 4,160 VAC breaker:

The local OPEN/CLOSED mechanical flag indicates OPEN.
A breaker overcurrent trip flag is actuated on one phase.
The line-side voltmeter indicates 4,160 VAC.
The load-side voltmeter indicates 0 VAC.

Assuming no operator actions were taken since the breaker opened, which one of the following could have caused the breaker to open?

A. A ground fault caused an automatic breaker trip.

B. A loss of control power caused an automatic breaker trip.

C. An operator opened the breaker locally.

D. An operator opened the breaker from a remote location.

ANSWER: A.