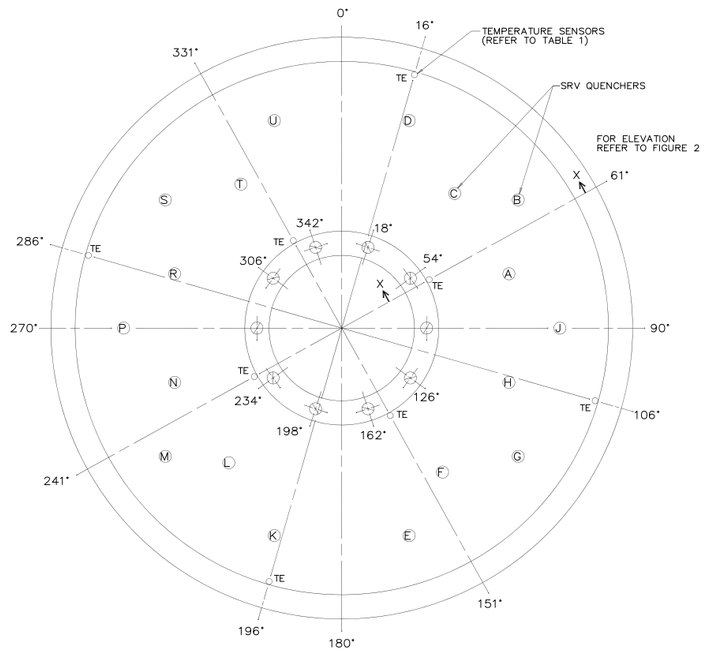

FIGURE 1 : INSTRUMENTATION LOCATION DIFINITION

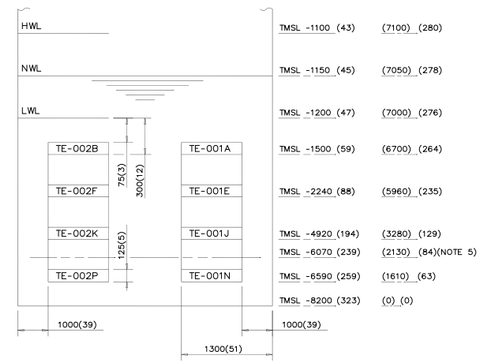

VIEW X-X FROM FIGURE 1
NOTES 2,6,7

FIGURE 2 : SENSOR AND ENVELOPE DIFINITION

NOTES

1 DIVISION I AND DIVISION III AND DIVISION II AND DIVISION IV TEMPERATURE SENSORS AT EACH LOCATION SHALL BE SEPARATED BY 150-300 MM (6-12 INCHES).

2 TYPICAL OF DIVISION I AND DIVISION II SENSORS AT AZIMUTHAL LOCATIONS 16° AND 61°, DIVISION III AND DIVISION IV SENSORS ARE NOT SHOWN.

3 BULK AVERAGE TEMPERATURE ALARM.

4 SIGNALS FROM TE WHICH ARE LOCATED AT THE SAME LEVEL SHALL BE OMITTED FROM AVERAGE TEMPERATURE CALCULATOIN. WHEN S/P WATER LEVEL DECREASE BELOW SENSOR LEVEL.

5 MIDDLE QUENCHER LEVEL.

6 TMSL - TYPICAL MEAN SEA LEVEL.

7 NUMBER ARE IN MILIMETER EXCEPT () WHICH ARE IN INCHES.

SUPPLEMENTAL DOCUMENTS UNDER THE FOLLOWING IDENTITES SHALL BE USED IN CONJUNCTION WITH THIS DRAWING

	REFERENCE DESIGNATOR
1 ATMOSPHERIC CONTROL SYSTEM P&ID	T31-1010
2 REMOTE SHUTDOWN SYSTEM IED	C61-1010
3 RESIDUAL HEAT REMOVAL SYS P&ID	E11-1010
4 PIPING AND INSTRUMENT SYMBOLS DIAGRAM	A10-3030
5 REACTOR PROTECTION SYSTEM IED	C71-1010
6 REACTOR BUILDING COOLING WATER SYS P&ID	P21-1010

TABLE 1 : SENSOR DIVISION ASSIGNMENT

	DIVISION I	DIVISION II	DIVISION III	DIVISION IV
16°	TE-001A,E,J,N		TE-001C,G,L,R	
67°		TE-002B,F,K,P		TE-002D,H,M,S
106°		TE-003B,F,K,P		TE-003D,H,M,S
142°	TE-004A,E,J,N		TE-004C,G,L,R	
196°	TE-005A,E,J,N		TE-005C,G,L,R	
247°		TE-006B,F,K,P		TE-006D,H,M,S
286°		TE-007B,F,K,P		TE-007D,H,M,S
322°	TE-008A,E,J,N		TE-008C,G,L,R	

MPL NO. T53-1010

Figure 7.6-11 – Suppression Pool Temperature Monitoring System IED (Sheet 1 of 3)

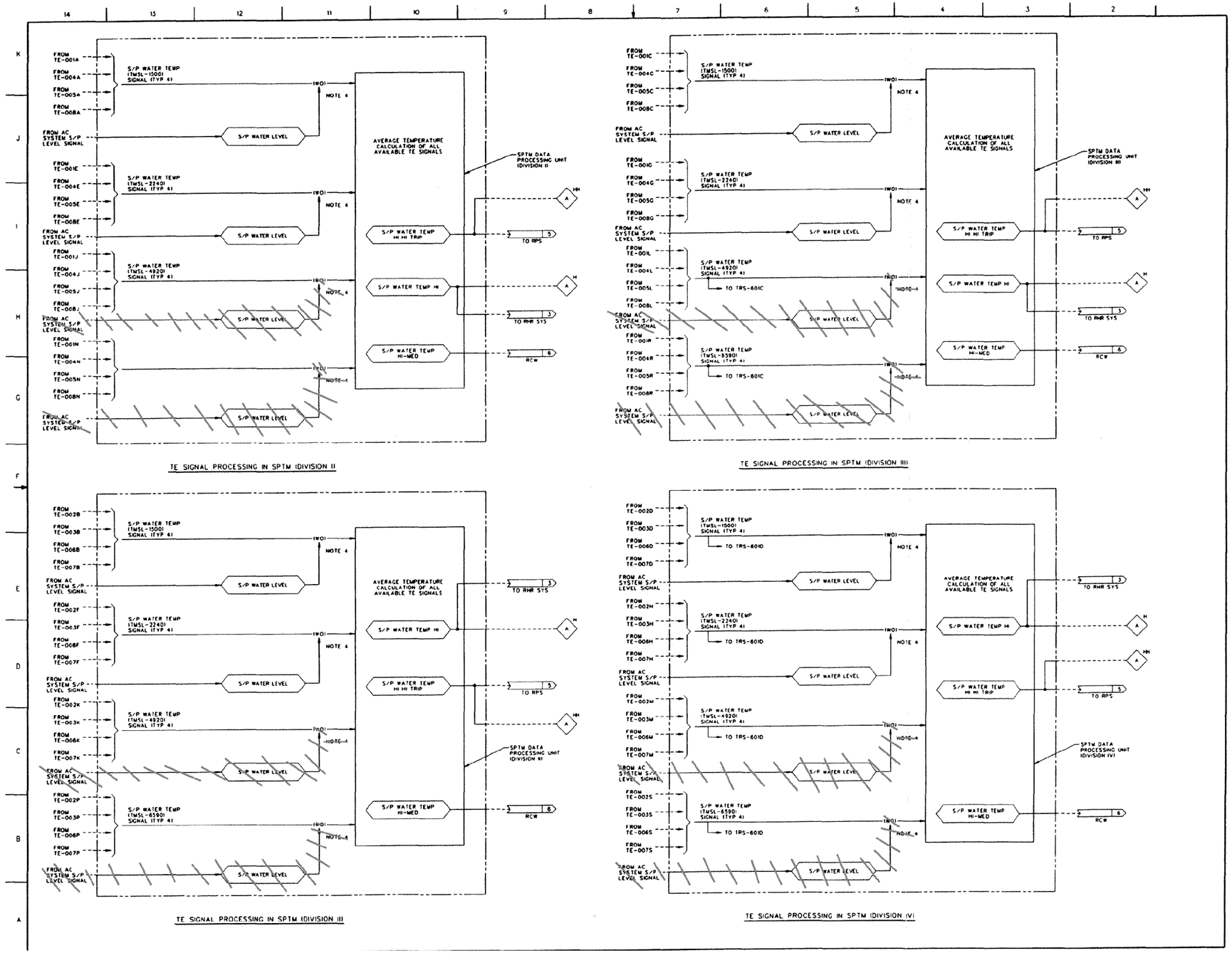

Figure 7.6-11 – Suppression Pool Temperature Monitoring System IED (Sheet 3 of 3)

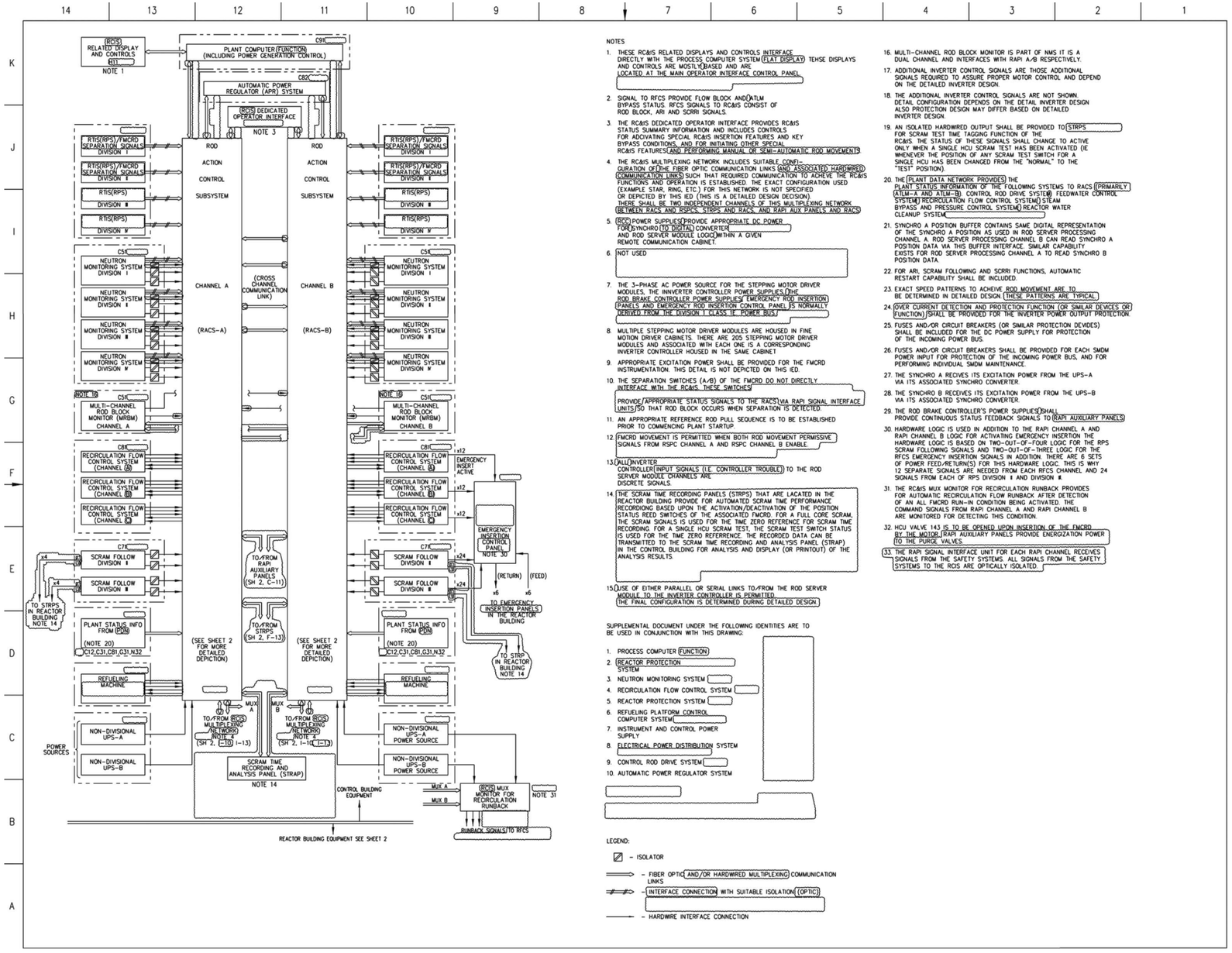

NOTES

1. THESE RC&IS RELATED DISPLAYS AND CONTROLS INTERFACE DIRECTLY WITH THE PROCESS COMPUTER SYSTEM (FLAT DISPLAY) TEHSE DISPLAYS AND CONTROLS ARE MOSTLY BASED AND ARE LOCATED AT THE MAIN OPERATOR INTERFACE CONTROL PANEL
2. SIGNAL TO RFCS PROVIDE FLOW BLOCK AND ATLM BYPASS STATUS. RFCS SIGNALS TO RC&IS CONSIST OF ROD BLOCK, ARI AND SCRRI SIGNALS.
3. THE RC&IS DEDICATED OPERATOR INTERFACE PROVIDES RC&IS STATUS SUMMARY INFORMATION AND INCLUDES CONTROLS FOR ADCIVATING SPECIAL RC&IS INSERTION FEATURES AND KEY BYPASS CONDITIONS, AND FOR INITIATING OTHER SPECIAL RC&IS FEATURES AND PERFORMING MANUAL OR SEMI-AUTOMATIC ROD MOVEMENTS
4. THE RC&IS MULTIPLEXING NETWORK INCLUDES SUITABLE CONFIGURATION OF THE FIBER OPTIC COMMUNICATION LINKS AND ASSOCIATED HARDWIRED COMMUNICATION LINKS SUCH THAT REQUIRED COMMUNICATION TO ACHEIVE THE RC&IS FUNCTIONS AND OPERATION IS ESTABLISHED. THE EXACT CONFIGURATION USED (EXAMPLE STAR, RING, ETC.) FOR THIS NETWORK IS NOT SPECIFIED OR DEPICTED BY THIS IED (THIS IS A DETAILED DESIGN DECISION). THERE SHALL BE TWO INDEPENDENT CHANNELS OF THIS MULTIPLEXING NETWORK BETWEEN RACS AND RSPCS, STRPS AND RACS, AND RAPI AUX PANELS AND RACS
5. RCC POWER SUPPLIES PROVIDE APPROPRIATE DC POWER FOR SYNCHRO TO DIGITAL CONVERTER AND ROD SERVER MODULE LOGIC WITHIN A GIVEN REMOTE COMMUNICATION CABINET.
6. NOT USED
7. THE 3-PHASE AC POWER SOURCE FOR THE STEPPING MOTOR DRIVER MODULES, THE INNVERTER CONTROLLER POWER SUPPLIES, THE ROD BRAKE CONTROLLER POWER SUPPLIES, EMERGENCY ROD INSERTION PANELS AND EMERGENCY ROD INSERTION CONTROL PANEL IS NORMALLY DERIVED FROM THE DIVISION I CLASS 1E POWER BUS
8. MULTIPLE STEPPING MOTOR DRIVER MODULES ARE HOUSED IN FINE MOTION DRIVER CABINETS. THERE ARE 205 STEPPING MOTOR DRIVER MODULES AND ASSOCIATED WITH EACH ONE IS A CORRESPONDING INVERTER CONTROLLER HOUSED IN THE SAME CABINET
9. APPROPRIATE EXCITATION POWER SHALL BE PROVIDED FOR THE FMCRD INSTRUMENTATION. THIS DETAIL IS NOT DEPICTED ON THIS IED.
10. THE SEPARATION SWITCHES (A/B) OF THE FMCRD DO NOT DIRECTLY INTERFACE WITH THE RC&IS. THESE SWITCHES PROVIDE APPROPRIATE STATUS SIGNALS TO THE RACS VIA RAPI SIGNAL INTERFACE UNITS SO THAT ROD BLOCK OCCURS WHEN SEPARATION IS DETECTED.
11. AN APPROPRIATE REFERENCE ROD PULL SEQUENCE IS TO BE ESTABLISHED PRIOR TO COMMENCING PLANT STARTUP.
12. FMCRD MOVEMENT IS PERMITTED WHEN BOTH ROD MOVEMENT PERMISSIVE SIGNALS FROM RSPC CHANNEL A AND RSPC CHANNEL B ENABLE
13. ALL INVERTER CONTROLLER INPUT SIGNALS (I.E. CONTROLLER TROUBLE) TO THE ROD SERVER MODULE CHANNELS ARE DISCRETE SIGNALS.
14. THE SCRAM TIME RECORDING PANELS (STRPS) THAT ARE LACATED IN THE REACTOR BUILDING PROVIDE FOR AUTOMATED SCRAM TIME PERFORMANCE RECORDIONG BASED UPON THE ACTIVATION/DEACTIVATION OF THE POSITION STATUS REED SWITCHES OF THE ASSOCIATED FMCRD. FOR A FULL CORE SCRAM, THE SCRAM SIGNALS IS USED FOR THE TIME ZERO REFERENCE FOR SCRAM TIME RECORDING. FOR A SINGLE HCU SCRAM TEST, THE SCRAM TEST SWITCH STATUS IS USED FOR THE TIME ZERO REFERENCE. THE RECORDED DATA CAN BE TRANSMITTED TO THE SCRAM TIME RECORDING AND ANALYSIS PANEL (STRAP) IN THE CONTROL BUILDING FOR ANALYSIS AND DISPLAY (OR PRINTOUT) OF THE ANALYSIS RESULTS.
15. USE OF EITHER PARALLEL OR SERIAL LINKS TO/FROM THE ROD SERVER MODULE TO THE INVERTER CONTROLLER IS PERMITTED. THE FINAL CONFIGURATION IS DETERMINED DURING DETAILED DESIGN.
16. MULTI-CHANNEL ROD BLOCK MONITOR IS PART OF NMS IT IS A DUAL CHANNEL AND INTERFACES WITH RAPI A/B RESPECTIVELY.
17. ADDITIONAL INVERTER CONTROL SIGNALS ARE THOSE ADDITIONAL SIGNALS REQUIRED TO ASSURE PROPER MOTOR CONTROL AND DEPEND ON THE DETAILED INVERTER DESIGN.
18. THE ADDITIONAL INVERTER CONTROL SIGNALS ARE NOT SHOWN. DETAIL CONFIGURATION DEPENDS ON THE DETAIL INVERTER DESIGN ALSO PROTECTION DESIGN MAY DIFFER BASED ON DETAILED INVERTER DESIGN.
19. AN ISOLATED HARDWRED OUTPUT SHALL BE PROVIDED TO STRPS FOR SCRAM TEST TIME TAGGING FUNCTION OF THE RC&IS. THE STATUS OF THESE SIGNALS SHALL CHANGE TO ACTIVE ONLY WHEN A SINGLE HCU SCRAM TEST HAS BEEN ACTIVATED (IE WHENEVER THE POSITION OF ANY SCRAM TEST SWITCH FOR A SINGLE HCU HAS BEEN CHANGED FROM THE "NORMAL" TO THE "TEST" POSITION).
20. THE PLANT DATA NETWORK PROVIDES THE PLANT STATUS INFORMATION OF THE FOLLOWING SYSTEMS TO RACS (PRIMARILY ATLM-A AND ATLM-B). CONTROL ROD DRIVE SYSTEM FEEDWATER CONTROL SYSTEM RECIRCULATION FLOW CONTROL SYSTEM STEAM BYPASS AND PRESSURE CONTROL SYSTEM REACTOR WATER CLEANUP SYSTEM
21. SYNCHRO A POSITION BUFFER CONTAINS SAME DIGITAL REPRESENTATION OF THE SYNCHRO A POSITION AS USED IN ROD SERVER PROCESSING CHANNEL A. ROD SERVER PROCESSING CHANNEL B CAN READ SYNCHRO A POSITION DATA VIA THIS BUFFER INTERFACE. SIMILAR CAPABILITY EXISTS FOR ROD SERVER PROCESSING CHANNEL A TO READ SYNCHRO B POSTION DATA.
22. FOR ARI, SCRAM FOLLOWING AND SCRRI FUNCTIONS, AUTOMATIC RESTART CAPABILITY SHALL BE INCLUDED.
23. EXACT SPEED PATTERNS TO ACHEIVE ROD MOVEMENT ARE TO BE DETERMINED IN DETAILED DESIGN. THESE PATTERNS ARE TYPICAL.
24. OVER CURRENT DETECTION AND PROTECTION FUNCTION (OR SIMILAR DEVICES OR FUNCTION) SHALL BE PROVIDED FOR THE INVERTER POWER OUTPUT PROTECTION.
25. FUSES AND/OR CIRCUIT BREAKERS (OR SIMILAR PROTECTION DEVIDES) SHALL BE INCLUDED FOR THE DC POWER SUPPLY FOR PROTECTION OF THE INCOMING POWER BUS.
26. FUSES AND/OR CIRCUIT BREAKERS SHALL BE PROVIDED FOR EACH SMDM POWER INPUT FOR PROTECTION OF THE INCOMING POWER BUS, AND FOR PERFORMING INDIVIDUAL SMDM MAINTENANCE.
27. THE SYNCHRO A RECIVES ITS EXCITATION POWER FROM THE UPS-A VIA ITS ASSOCIATED SYNCHRO CONVERTER.
28. THE SYNCHRO B RECIVES ITS EXCITATION POWER FROM THE UPS-B VIA ITS ASSOCIATED SYNCHRO CONVERTER.
29. THE ROD BRAKE CONTROLLER'S POWER SUPPLIES SHALL PROVIDE CONTINUOUS STATUS FEEDBACK SIGNALS TO RAPI AUXILIARY PANELS
30. HARDWARE LOGIC IS USED IN ADDITION TO THE RAPI CHANNEL A AND RAPI CHANNEL B LOGIC FOR ACTIVATING EMERGENCY INSERTION THE HARDWARE LOGIC IS BASED ON TWO-OUT-OF-FOUR LOGIC FOR THE RPS SCRAM FOLLOWING SIGNALS AND TWO-OUT-OF-THREE LOGIC FOR THE RFCS EMERGENCY INSERTION SIGNALS IN ADDITION. THERE ARE 6 SETS OF POWER FEED/RETURN(S) FOR THIS HARDWARE LOGIC. THIS IS WHY 12 SEPARATE SIGNALS ARE NEEDED FROM EACH RFCS CHANNEL AND 24 SIGNALS FROM EACH OF RPS DIVISION I AND DIVISION II.
31. THE RC&IS MUX MONITOR FOR RECIRCULATION RUNBACK PROVIDES FOR AUTOMATIC RECIRCULATION FLOW RUNBACK AFTER DETECTION OF AN ALL FMCRD RUN-IN CONDITION BEING ACTIVATED. THE COMMAND SIGNALS FROM RAPI CHANNEL A AND RAPI CHANNEL B ARE MONITORED FOR DETECTING THIS CONDITION.
32. HCU VALVE 143 IS TO BE OPENED UPON INSERTION OF THE FMCRD BY THE MOTOR. RAPI AUXILIARY PANELS PROVIDE ENERGIZATION POWER TO THE PURGE VALVES.
33. THE RAPI SIGNAL INTERFACE UNIT FOR EACH RAPI CHANNEL RECEIVES SIGNALS FROM THE SAFETY SYSTEMS. ALL SIGNALS FROM THE SAFETY SYSTEMS TO THE RCIS ARE OPTICALLY ISOLATED.

SUPPLEMENTAL DOCUMENT UNDER THE FOLLOWING IDENTITIES ARE TO BE USED IN CONJUNCTION WITH THIS DRAWING:

1. PROCESS COMPUTER FUNCTION
2. REACTOR PROTECTION SYSTEM
3. NEUTRON MONITORING SYSTEM
4. RECIRCULATION FLOW CONTROL SYSTEM
5. REACTOR PROTECTION SYSTEM
6. REFUELING PLATFORM CONTROL COMPUTER SYSTEM
7. INSTRUMENT AND CONTROL POWER SUPPLY
8. ELECTRICAL POWER DISTRIBUTION SYSTEM
9. CONTROL ROD DRIVE SYSTEM
10. AUTOMATIC POWER REGULATOR SYSTEM

LEGEND:

- ISOLATOR
- FIBER OPTIC AND/OR HARDWIRED MULTIPLEXING COMMUNICATION LINKS
- INTERFACE CONNECTION WITH SUITABLE ISOLATION (OPTIC)
- HARDWIRE INTERFACE CONNECTION

Figure 7.7-2 – Rod Control and Information System IED (Sheet 1 of 5)

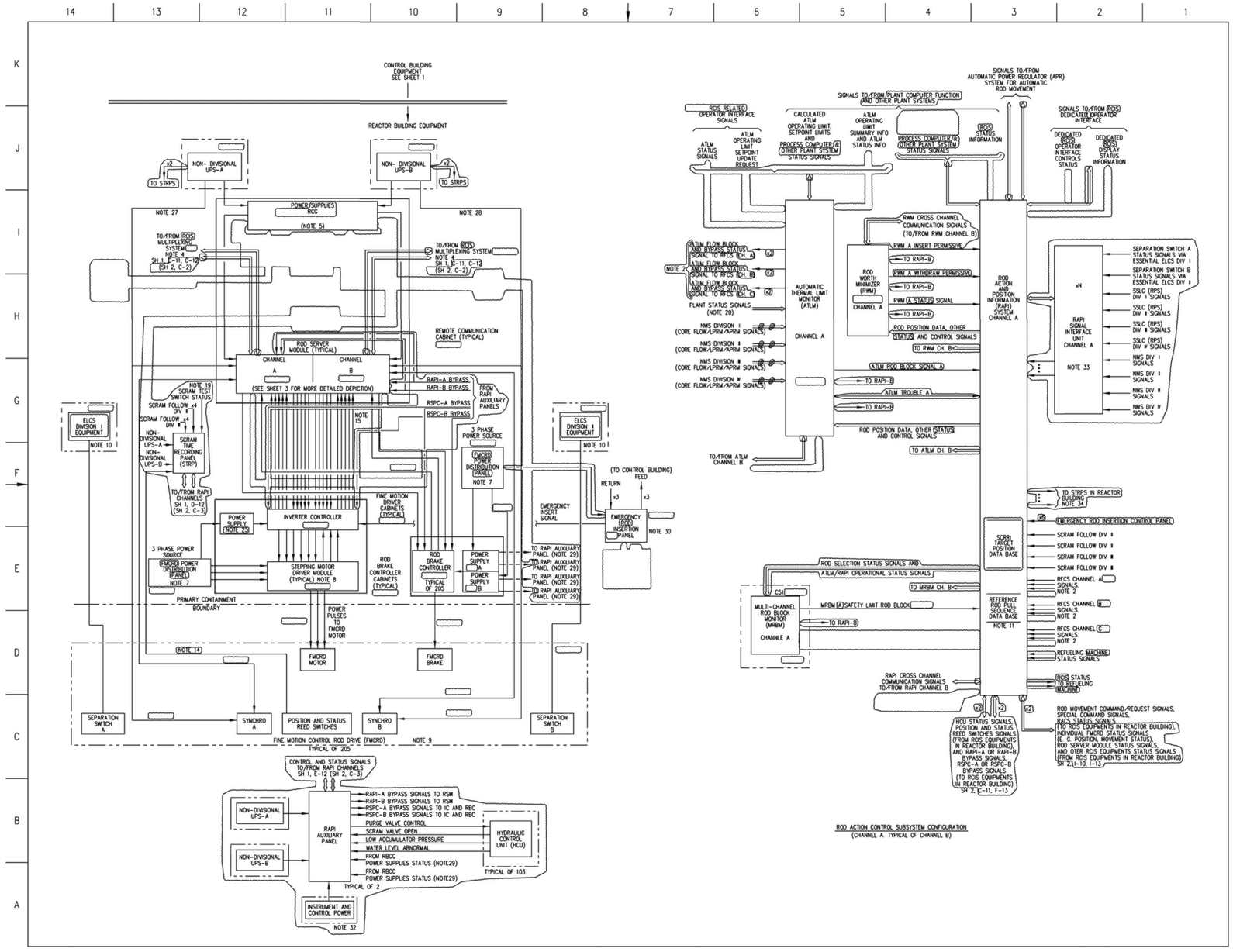

Figure 7.7-2 – Rod Control and Information System IED (Sheet 2 of 5)

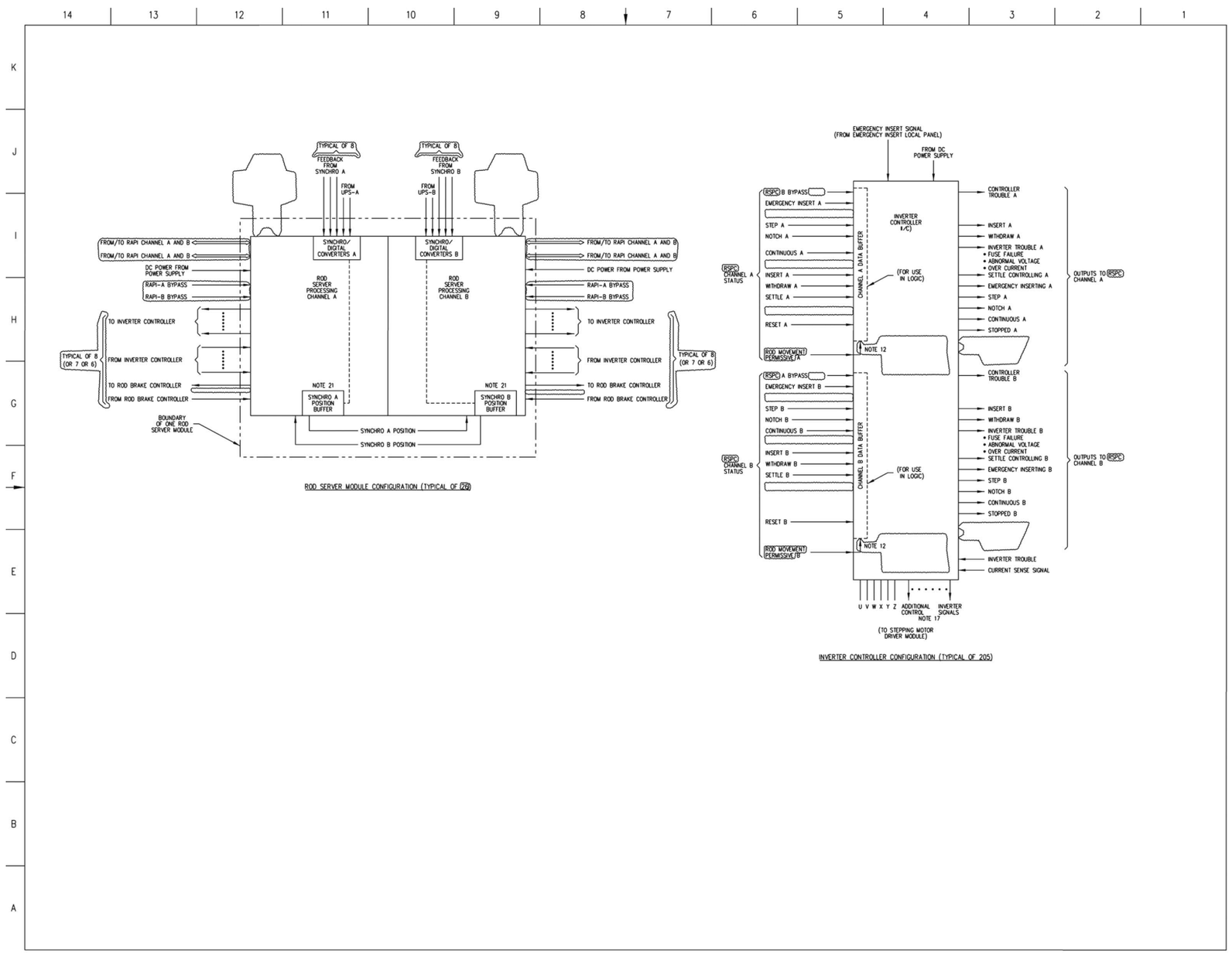

Figure 7.7-2 – Rod Control and Information System IED (Sheet 3 of 5)

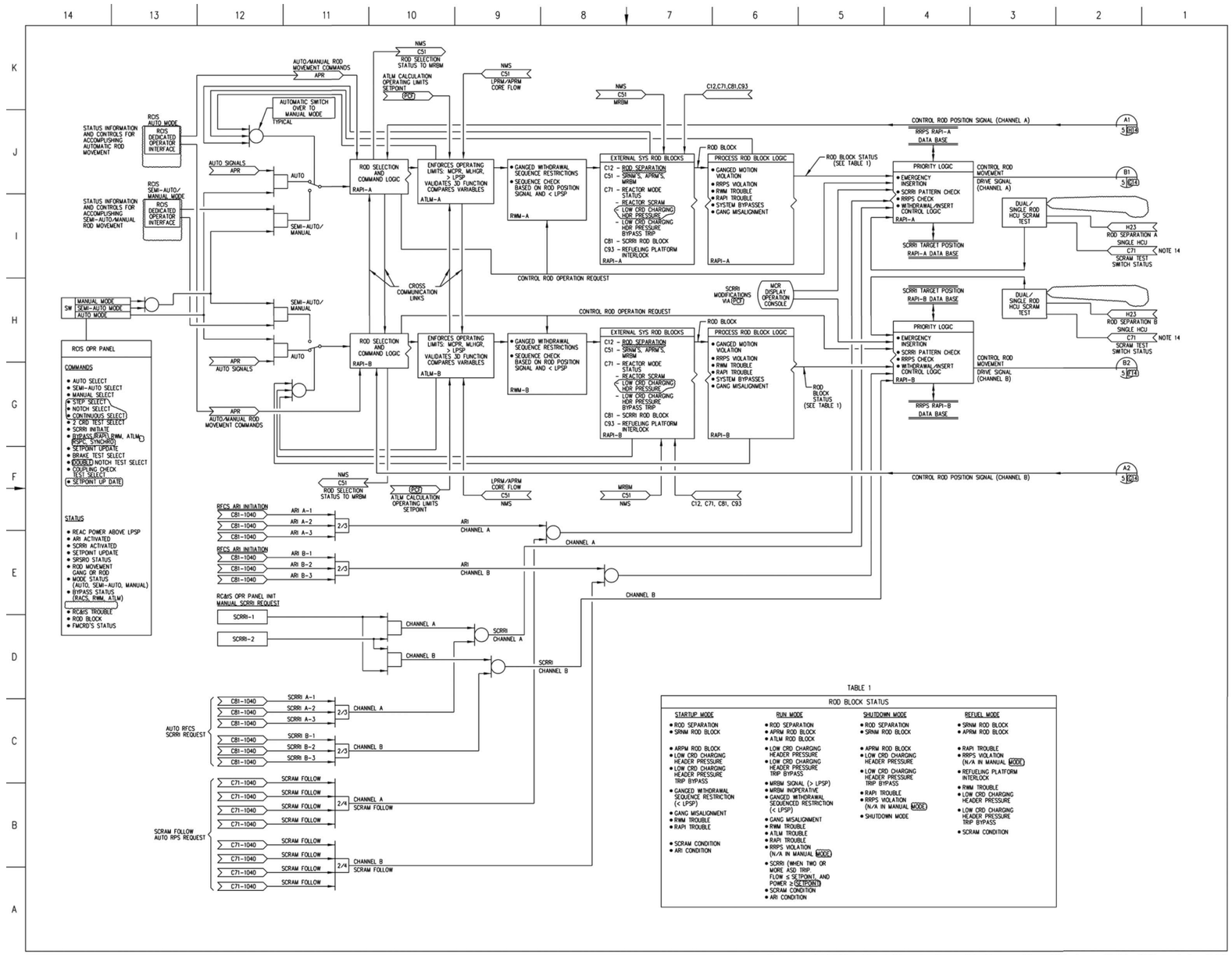

Figure 7.7-2 – Rod Control and Information System IED (Sheet 4 of 5)

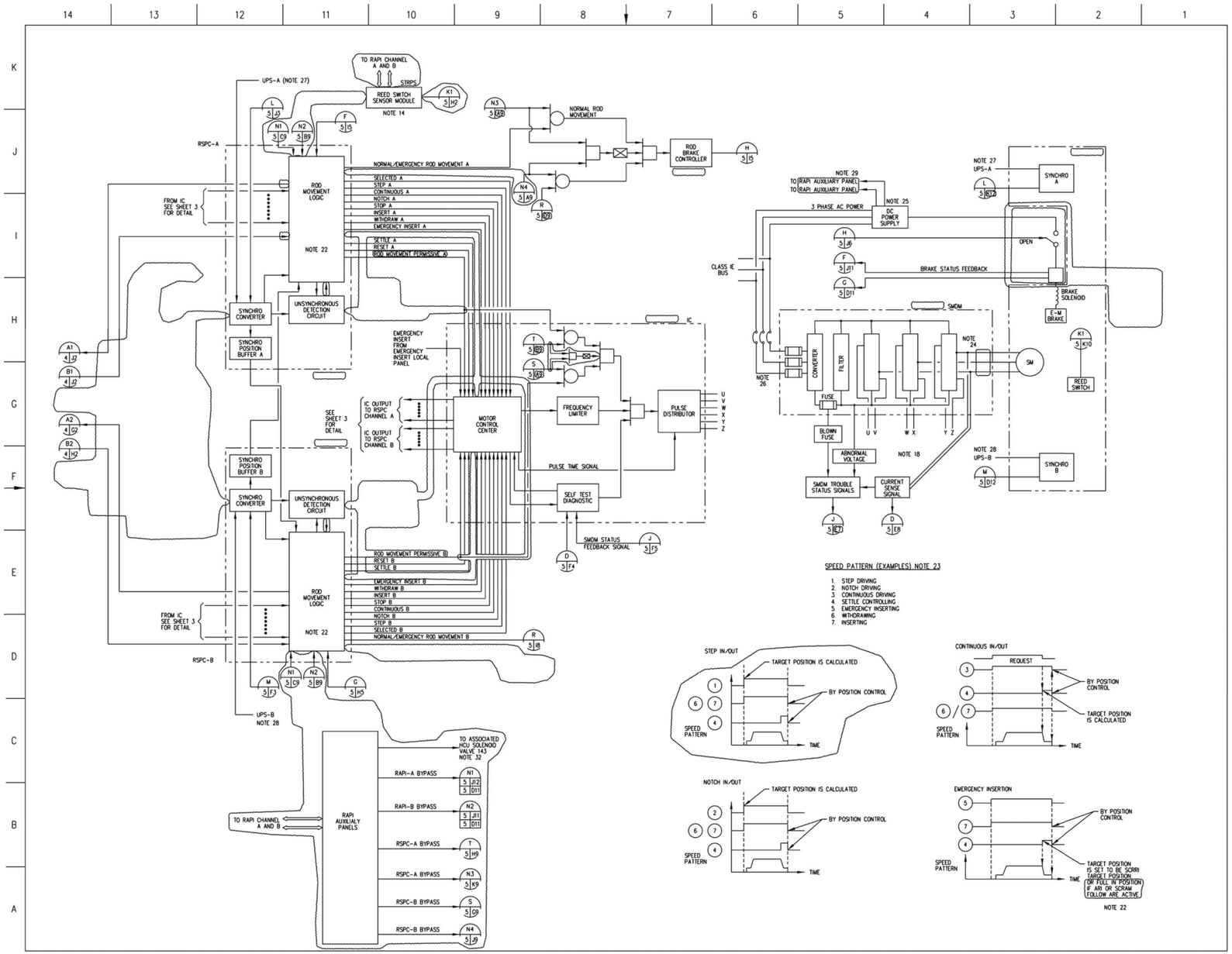

Figure 7.7-2 – Rod Control and Information System IED (Sheet 5 of 5)

ABWR CERTIFICATION PROGRAM

TABLE OF CONTENTS

Figure 7.7-3 – Rod Control and Information System IBD (Sheet 1 of 87)

NOMENCLATURE

1. EXCEPT WHERE SHOWN OTHERWISE. THIS IBD REPRESENTS THE LOGIC OF RAPI CHANNEL-A. RSPC-A. ATLM CHANNEL-A AND RWM CHANNEL-A.
2. ALL OUTPUTS ARE LOGIC "1" FOR THE STATED OUTPUT CONDITION IN THE "OUTPUT DESCRIPTION" COLUMN.
3. THE S-R FLIP-FLOPS ARE SET AND RESET BY POSITIVE LOGIC.
4. "A" – REPRESENTS AN ANALOG SIGNAL.
   "B" – REPRESENTS A SIGNAL INTERNAL TO RCIS.
   "D" – REPRESENT A SIGNAL COMING TO OR GOING FROM RCIS FROM/TO ANOTHER SYSTEM.
   "L" – REPRESENTS STATUS INFORMATION FOR THE OPERATOR.
   "ANN" – REPRESENTS INFORMATION THAT IS ANNUNCIATED.
5. MORE THAN ONE INPUT SIGNAL NUMBER IN THE SIGNAL ID COLUMN IMPLIES THE "OR" ING OF THOSE SIGNALS.

SUPPLEMENTAL DOCUMENTS UNDER THE FOLLOWING IDENTITIES ARE TO BE USED IN CONJUNCTION WITH THIS DRAWING.

1. PROCESS COMPUTER FUNCTION
2. CONTROL ROD DRIVE SYSTEM
3. AUTOOMATIC POWER REGULATOR SYSTEM
4. REACTOR PROTECTION SYSTEM
5. FEEDWATER CONTROL SYSTEM
6. RECIRCULATION FLOW CONTROL SYSTEM
7. NEUTRON MONITORING SYSTEM
8. REFUELING PLATFORM CONTROL COMPUTER SYSTEM
9. REACTOR PROTECTION SYSTEM

LEGENDS:

⟹ – STREAM OF BINARY BITS

⟶ – ANALOG SIGNALS AND DISCRETE SIGNALS
IN CASE OF AN ANALOG SIGNAL.
"A" IS PLACED IN THE "CLASS" COLUMN.

NOMENCLATURE/REFERENCES

Figure 7.7-3 – Rod Control and Information System IBD (Sheet 2 of 87)

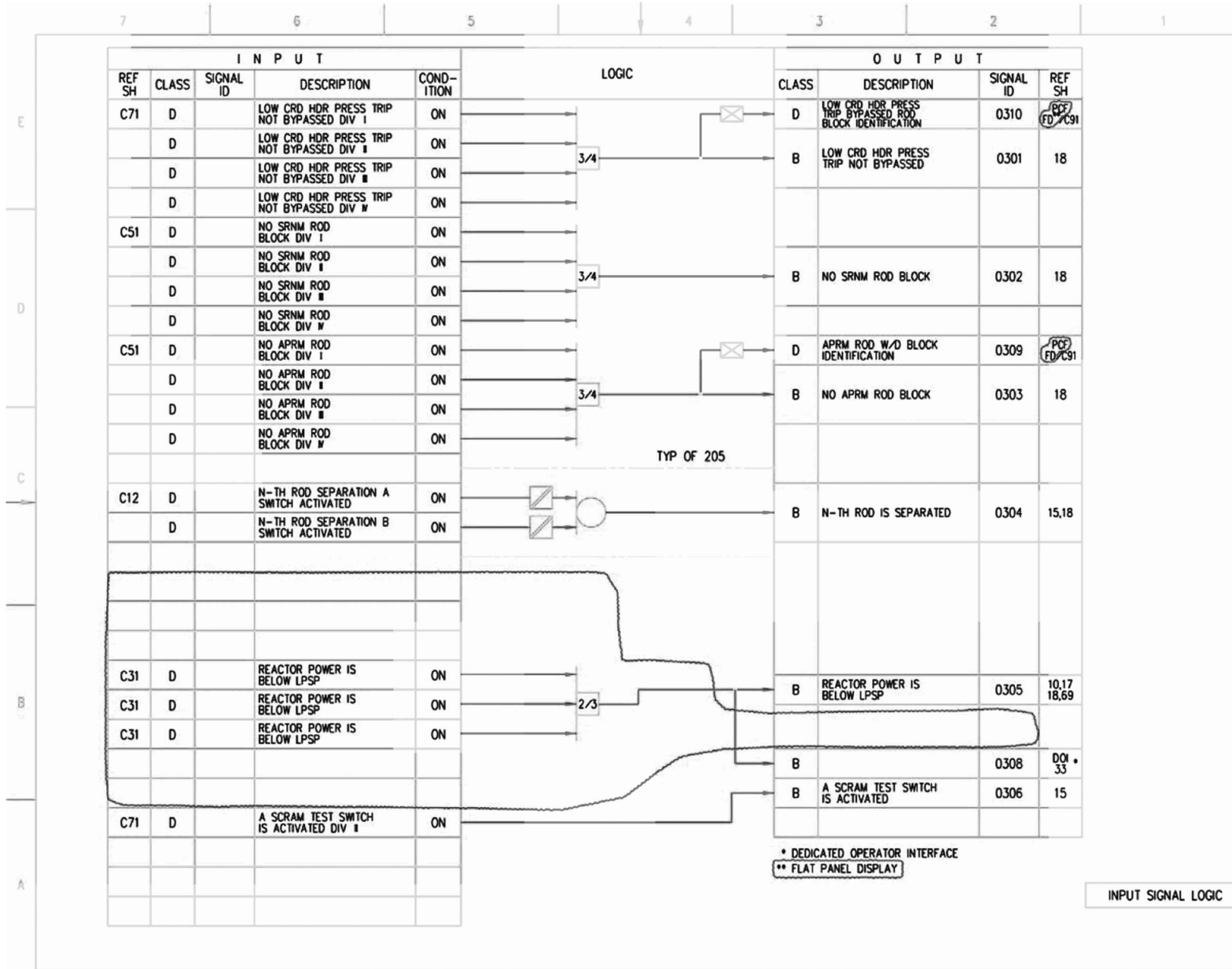

Figure 7.7-3 – Rod Control and Information System IBD (Sheet 3 of 87)

INPUT					LOGIC	OUTPUT			
REF SH	CLASS	SIGNAL ID	DESCRIPTION	COND-ITION		CLASS	DESCRIPTION	SIGNAL ID	REF SH
C71	D		SCRAM FOLLOW FROM RPS DIV I	ON					
	D		SCRAM FOLLOW FROM RPS DIV II	ON	2/4	B	SCRAM FOLLOW CONDITION EXIST	0401	10,18
	D		SCRAM FOLLOW FROM RPS DIV III	ON					
	D		SCRAM FOLLOW FROM RPS DIV IV	ON		D	SCRAM FOLLOW CONDITION ROD WD BLOCK IDENTIFICATION	0409	PCF FD/C91
C71	D		REACTOR MODE SWITCH IN SHUTDOWN DIV I	ON					
	D		REACTOR MODE SWITCH IN SHUTDOWN DIV II	ON	2/4	B	REACTOR MODE SWITCH IN S/D	0402	18
	D		REACTOR MODE SWITCH IN SHUTDOWN DIV III	ON					
	D		REACTOR MODE SWITCH IN SHUTDOWN DIV IV	ON		D	REACTOR MODE SWITCH IN S/D ROD WD BLOCK IDENTIFICATION	0410	
C71	D		REACTOR MODE SWITCH IN REFUEL DIV I	ON					
	D		REACTOR MODE SWITCH IN REFUEL DIV II	ON	2/4	B	REACTOR MODE SWITCH IN REFUEL	0403	14,85, 30
	D		REACTOR MODE SWITCH IN REFUEL DIV III	ON					
	D		REACTOR MODE SWITCH IN REFUEL DIV IV	ON					
	D		REACTOR MODE SWITCH IN STARTUP DIV I	ON					
C71	D		REACTOR MODE SWITCH IN STARTUP DIV II	ON	2/4	B	REACTOR MODE SWITCH IN S/U	0404	69
	D		REACTOR MODE SWITCH IN STARTUP DIV III	ON					
	D		REACTOR MODE SWITCH IN STARTUP DIV IV	ON					
C71	D		REACTOR MODE SWITCH IN RUN DIV I	ON					
	D		REACTOR MODE SWITCH IN RUN DIV II	ON	2/4	B	REACTOR MODE SWITCH IN RUN	0405	17,18,69
	D		REACTOR MODE SWITCH IN RUN DIV III	ON					
	D		REACTOR MODE SWITCH IN RUN DIV IV	ON					
C51	D		MRBM-A ROD BLOCK	ON		B	MRBM-A ROD BLOCK	0406	18
C51	D		MRBM-B ROD BLOCK	ON		B	MRBM-B ROD BLOCK	0407	18

INPUT SIGNALS LOGIC

Figure 7.7-3 – Rod Control and Information System IBD (Sheet 4 of 87)

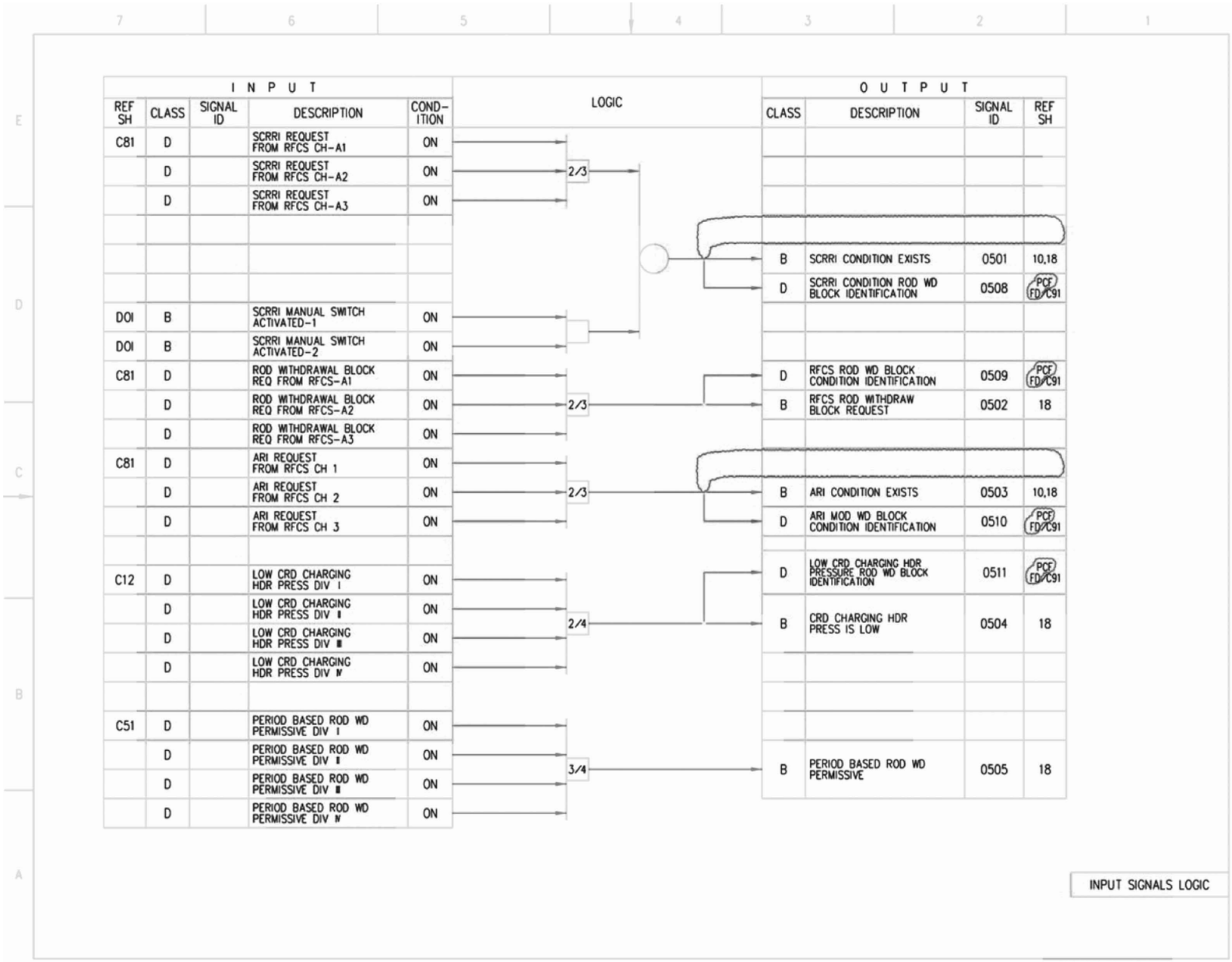

Figure 7.7-3 – Rod Control and Information System IBD (Sheet 5 of 87)

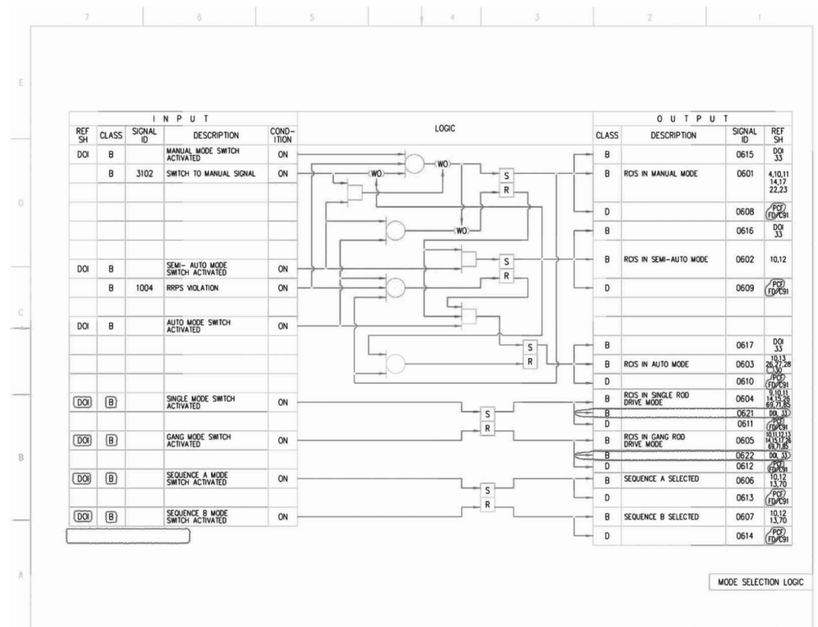

Figure 7.7-3 – Rod Control and Information System IBD (Sheet 6 of 87)

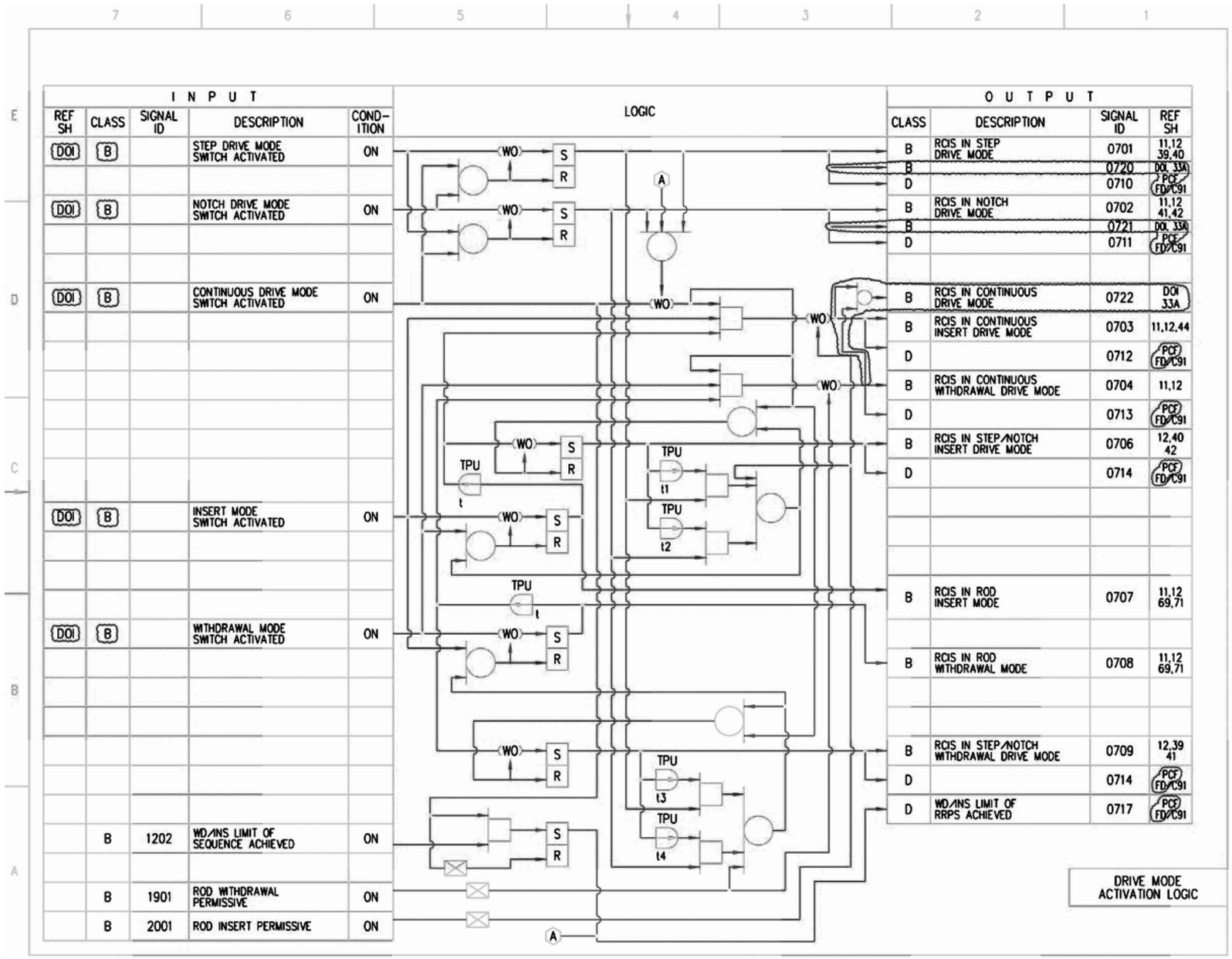

Figure 7.7-3 – Rod Control and Information System IBD (Sheet 7 of 87)

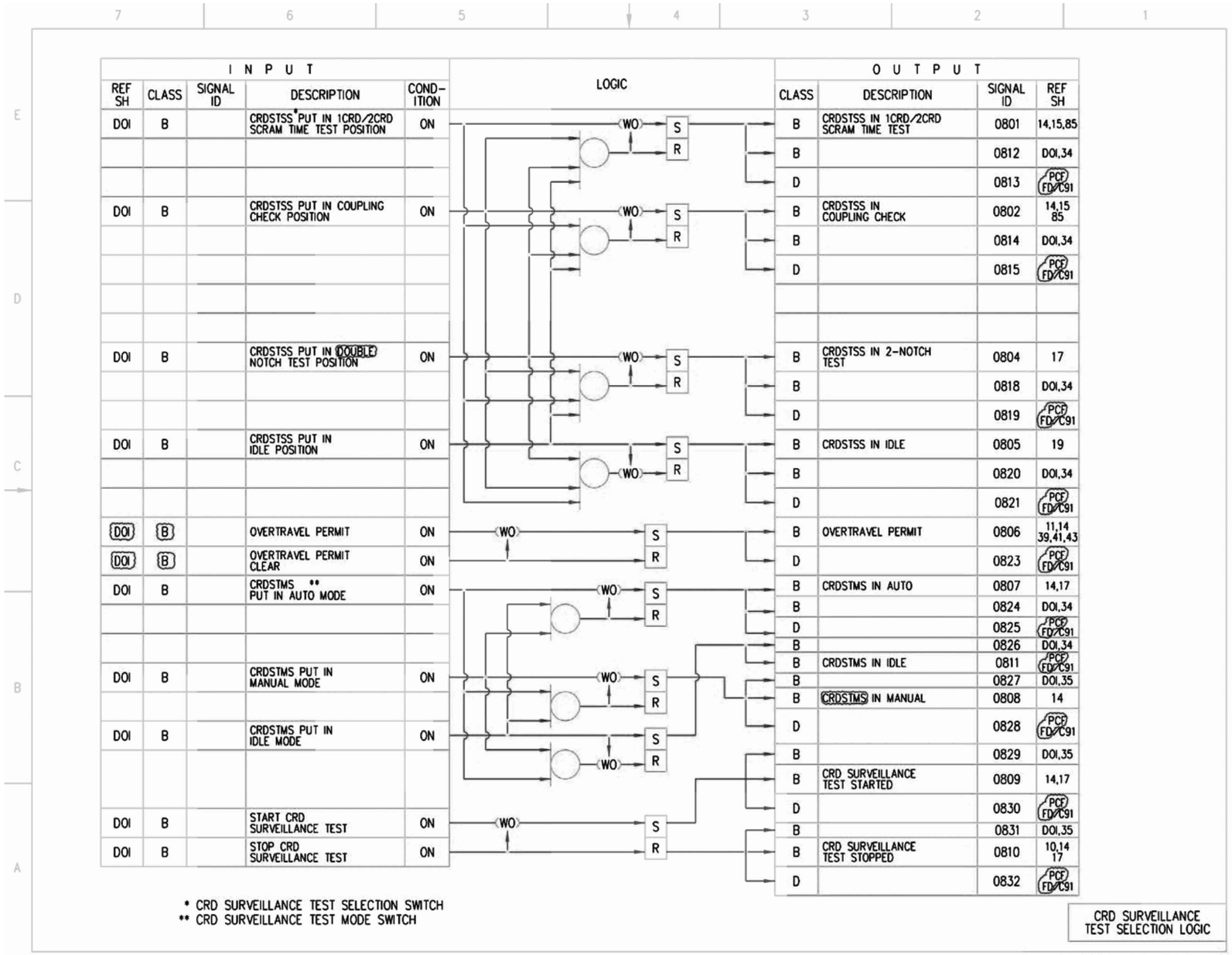

Figure 7.7-3 – Rod Control and Information System IBD (Sheet 8 of 87)

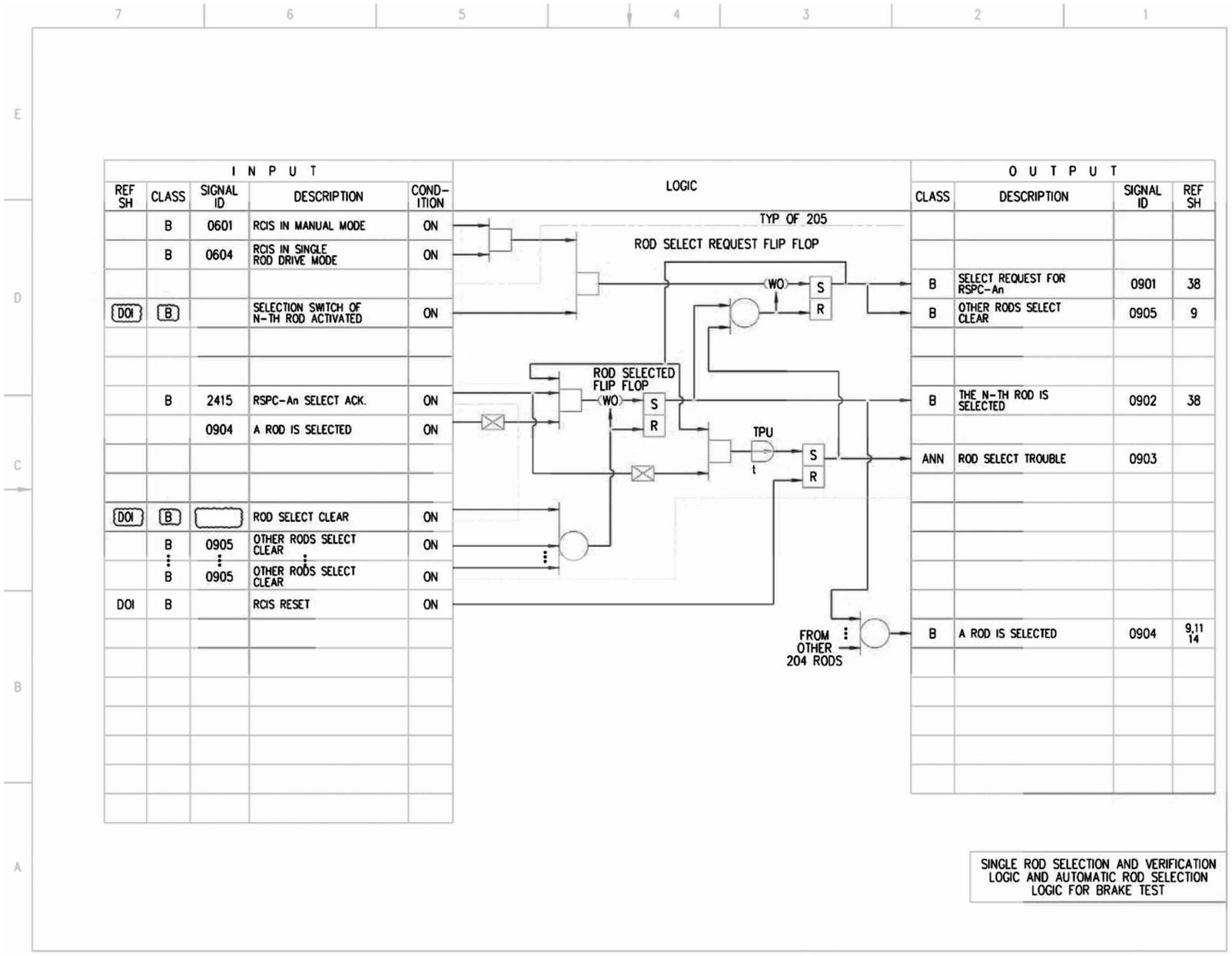

Figure 7.7-3 – Rod Control and Information System IBD (Sheet 9 of 87)

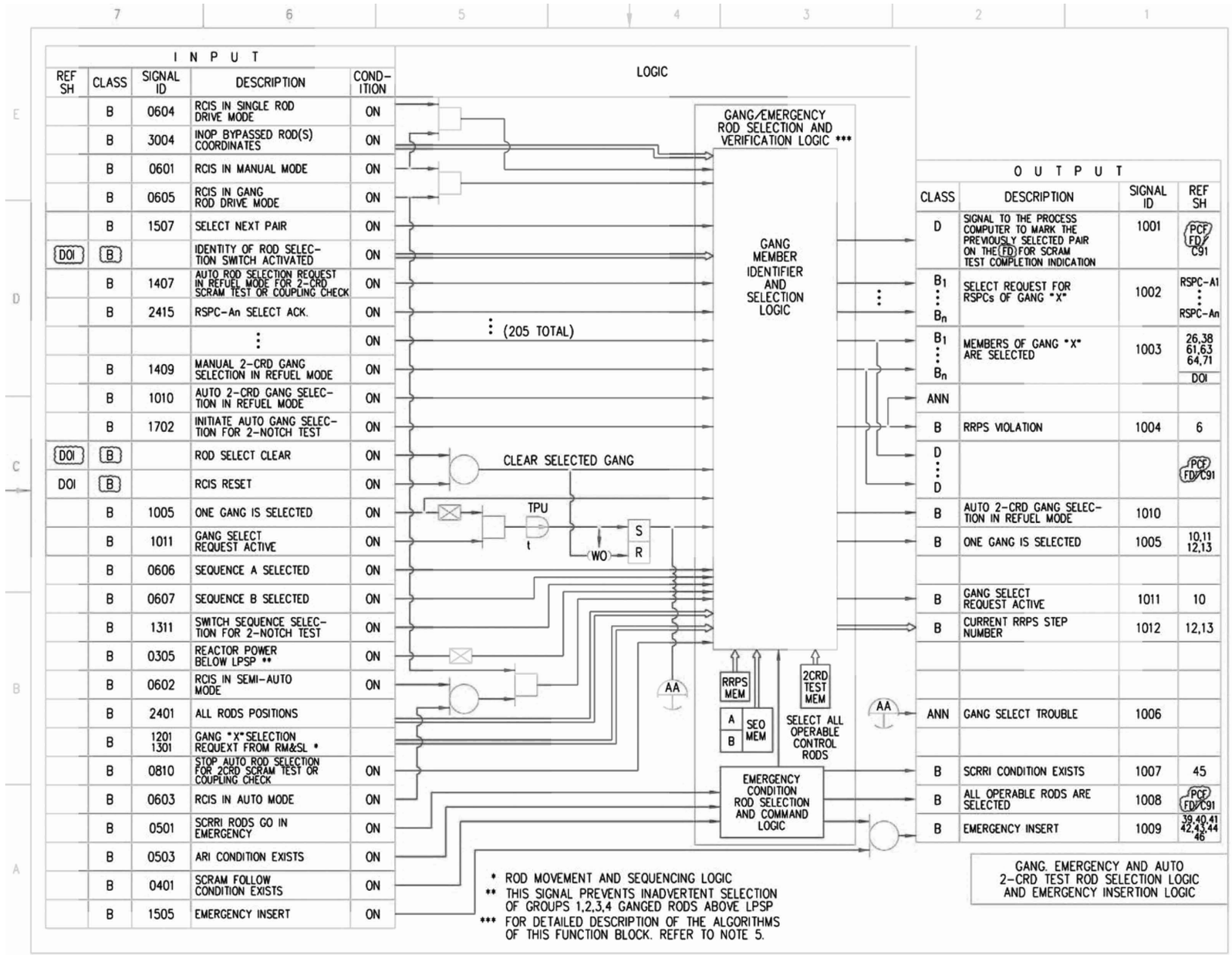

Figure 7.7-3 – Rod Control and Information System IBD (Sheet 10 of 87)

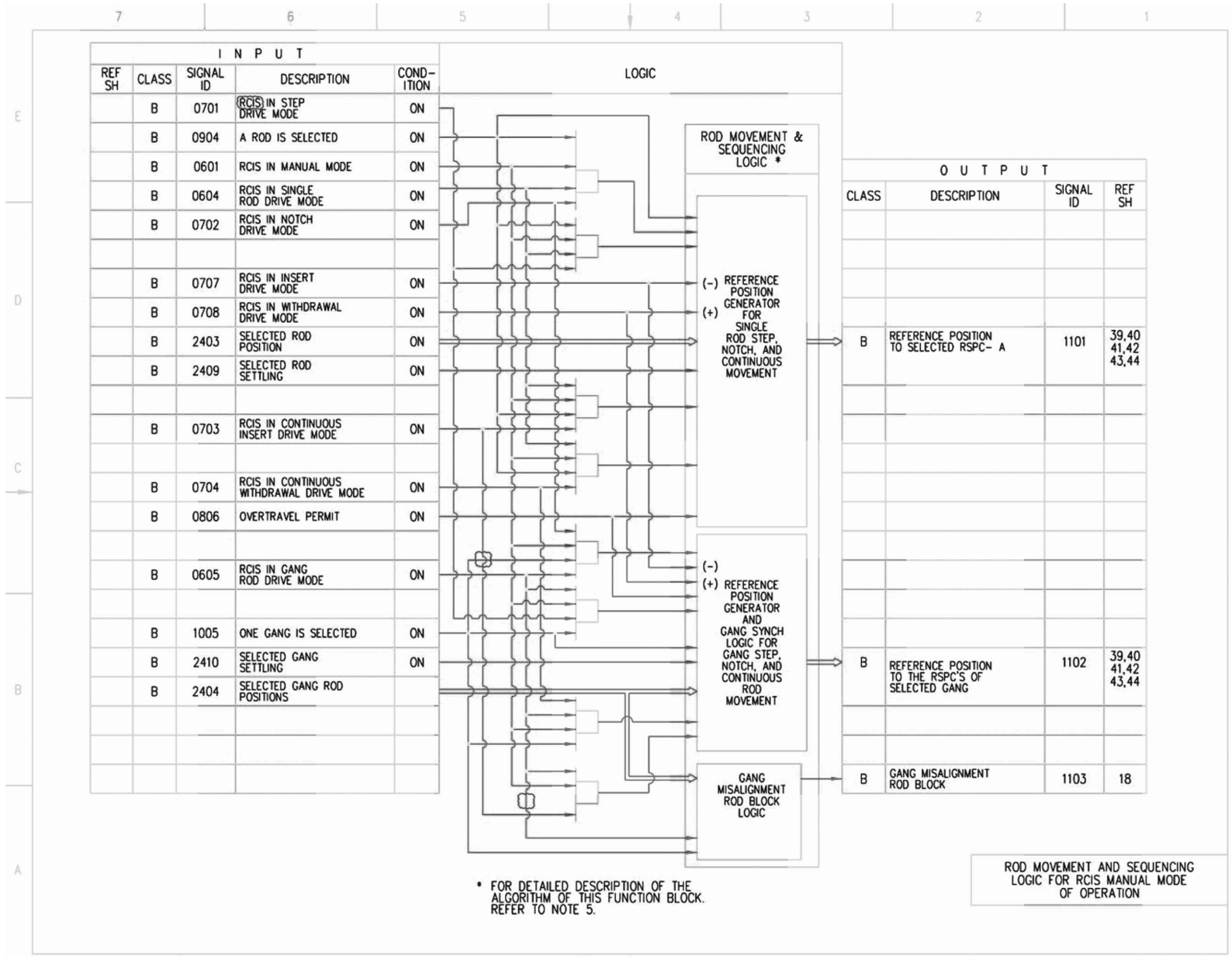

Figure 7.7-3 – Rod Control and Information System IBD (Sheet 11 of 87)

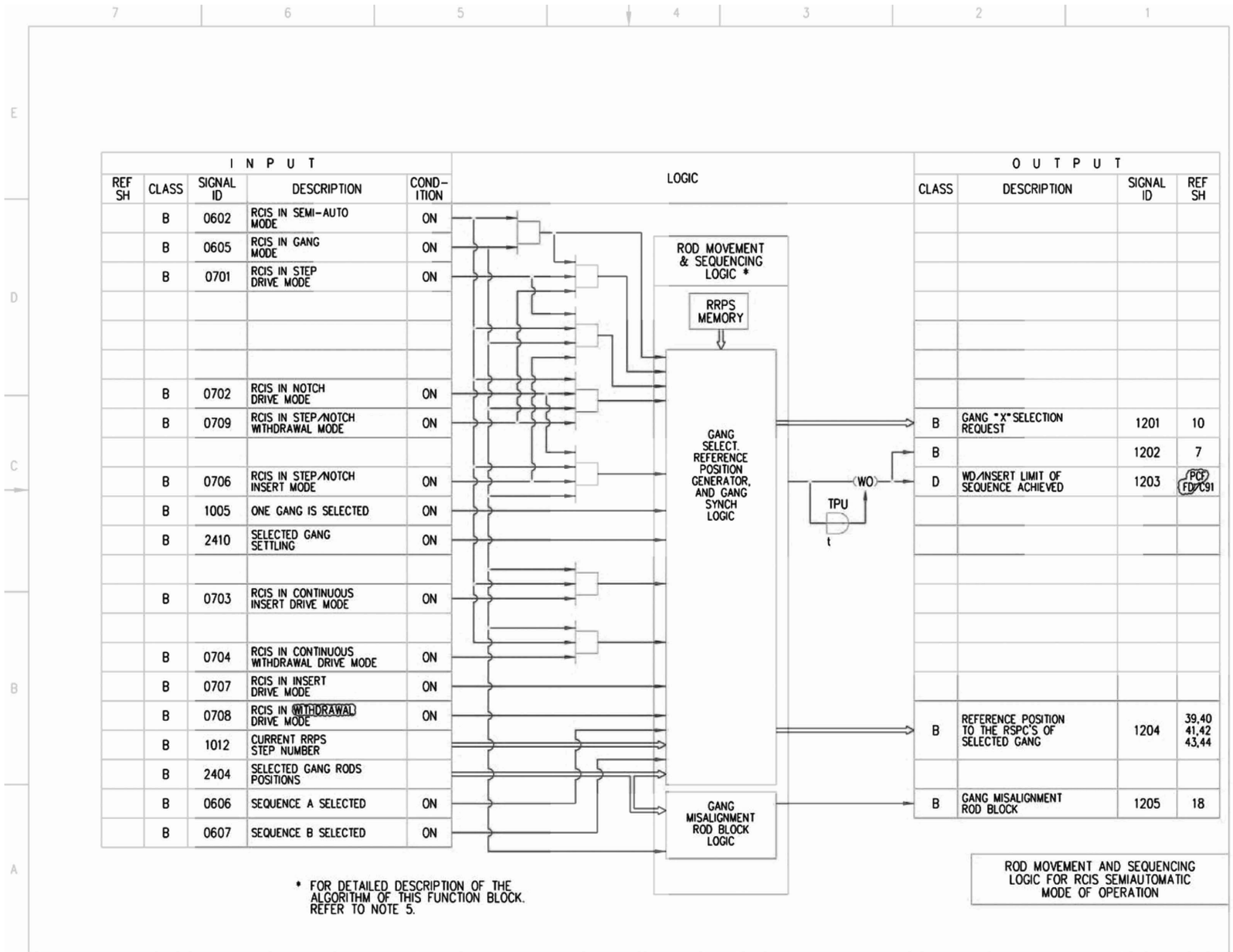

Figure 7.7-3 – Rod Control and Information System IBD (Sheet 12 of 87)

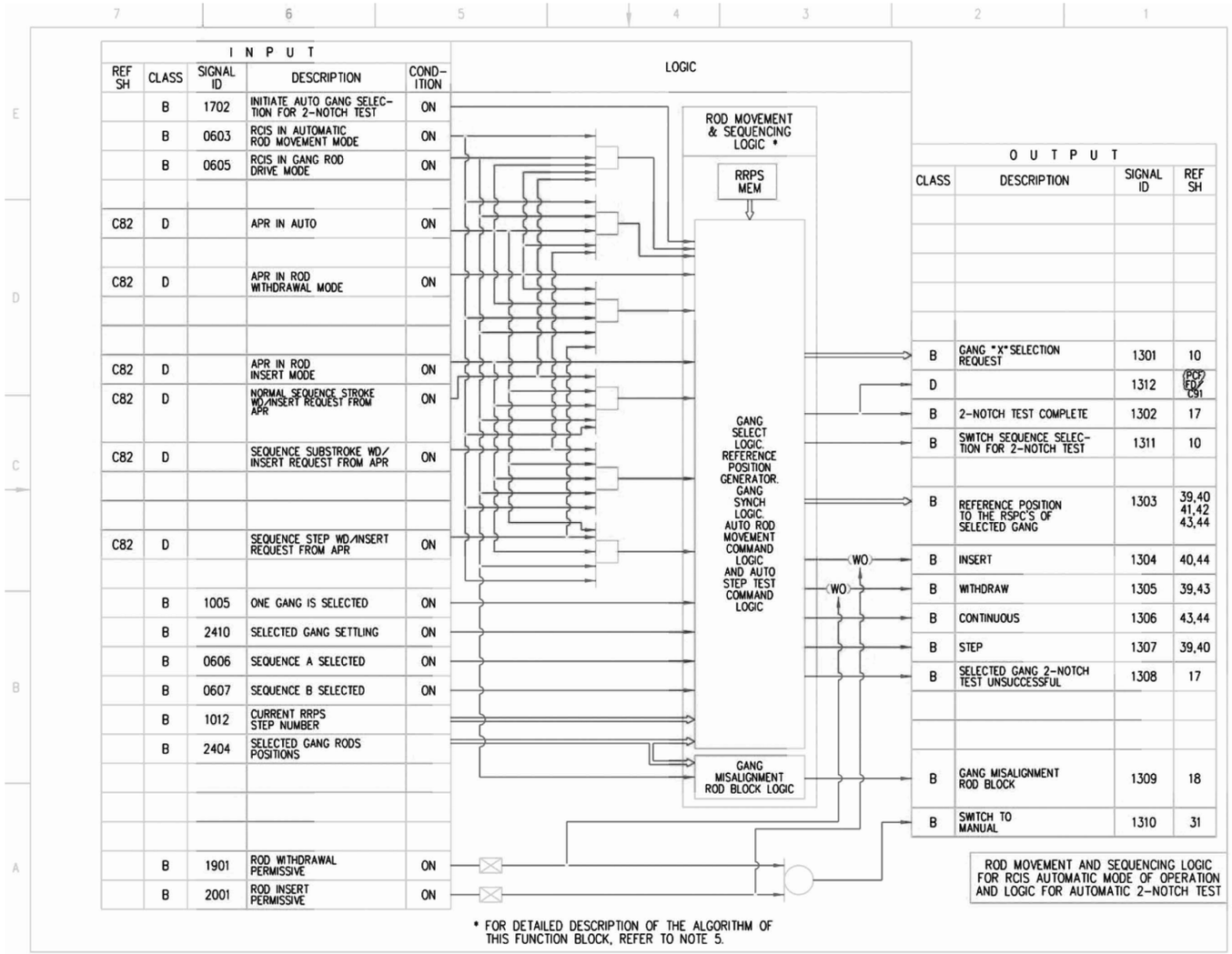

Figure 7.7-3 – Rod Control and Information System IBD (Sheet 13 of 87)