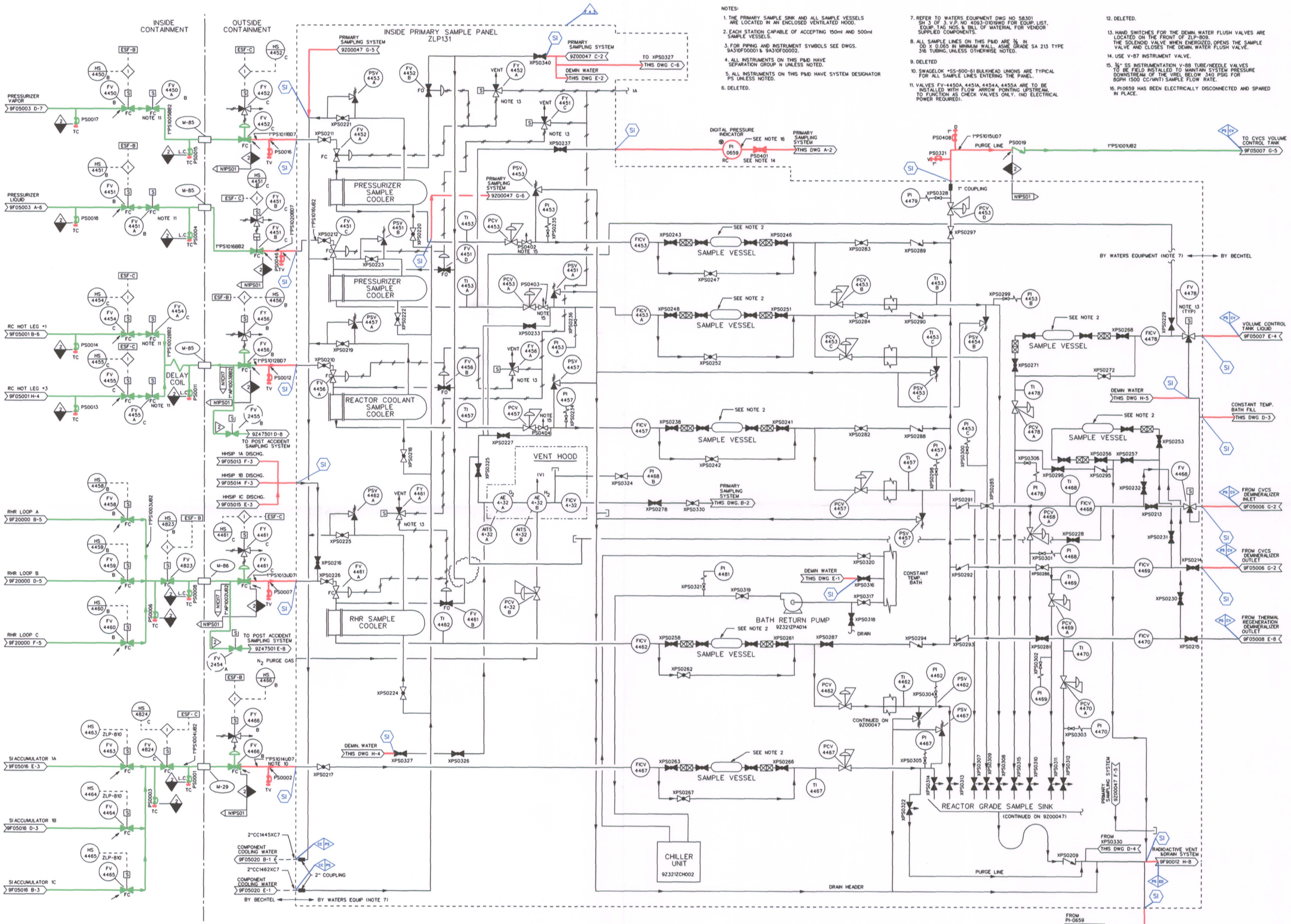

NOTES:

1. THE PRIMARY SAMPLE SINK AND ALL SAMPLE VESSELS ARE LOCATED IN AN ENCLOSED VENTILATED HOOD.
2. EACH STATION CAPABLE OF ACCEPTING 150ml AND 500ml SAMPLE VESSELS.
3. FOR PIPING AND INSTRUMENT SYMBOLS SEE DWGS. 9A310F00001 & 9A310F00002.
4. ALL INSTRUMENTS ON THIS P&ID HAVE SEPARATION GROUP N UNLESS NOTED.
5. ALL INSTRUMENTS ON THIS P&ID HAVE SYSTEM DESIGNATOR PS UNLESS NOTED.
6. DELETED.
7. REFER TO WATERS EQUIPMENT DWG NO 58301 SH 3 OF 3. V.P. NO 4093-01019WD FOR EQUIP. LIST, EQUIP. TAG NOS. & BILL OF MATERIAL FOR VENDOR SUPPLIED COMPONENTS.
8. ALL SAMPLE LINES ON THIS P&ID ARE ¼ IN OD X 0.065 IN MINIMUM WALL, ASME GRADE SA 213 TYPE 316 TUBING, UNLESS OTHERWISE NOTED.
9. DELETED
10. SWAGELOK #SS-600-61 BULKHEAD UNIONS ARE TYPICAL FOR ALL SAMPLE LINES ENTERING THE PANEL.
11. VALVES FV-4450A, 4451A, 4454A, 4455A ARE TO BE INSTALLED WITH FLOW ARROW POINTING UPSTREAM, TO FUNCTION AS CHECK VALVES ONLY. (NO ELECTRICAL POWER REQUIRED).
12. DELETED.
13. HAND SWITCHES FOR THE DEMIN. WATER FLUSH VALVES ARE LOCATED ON THE FRONT OF ZLP-809. THE SOLENOID VALVE WHEN ENERGIZED, OPENS THE SAMPLE VALVE AND CLOSES THE DEMIN. WATER FLUSH VALVE.
14. USE V-87 INSTRUMENT VALVE.
15. ¾" SS INSTRUMENTATION V-88 TUBE/NEEDLE VALVES TO BE FIELD INSTALLED TO MAINTAIN SYSTEM PRESSURE DOWNSTREAM OF THE VREL BELOW 340 PSIG FOR 80PH (500 CC/MNT) SAMPLE FLOW RATE.
16. PI0659 HAS BEEN ELECTRICALLY DISCONNECTED AND SPARED IN PLACE.

LR BOUNDARY DRAWING NO.	REV.
LR-STP-PS-5Z329Z00045#1	2

NO.	ISSUE DATE	REVISION	ORIG	CKR	RE	DV	SE
23		REVISED PER CR 05-9688-1	JGL				
22	9-6-01	INCORP. DCN 0102347.	JSH	ON FILE			
0-21	12-01-82	ISSUED FOR CONSTRUCTION.	SIGNATURES ON FILE				

ESEED. DGN

NO.	ISSUE DATE	REVISION	ORIG	CKR	RE	DV	SE

SOUTH TEXAS PROJECT NUCLEAR OPERATING COMPANY

PIPING & INSTRUMENTATION DIAGRAM
PRIMARY SAMPLING SYSTEM

PRIORITY	CADD FILE NO.	FSUG. NO.	STI. NO.	SCALE	DWG. NO.	SHT.	REV.
1	FJA265.231	D070928		NONE	5Z329Z00045 #1		23

...\LR-STP-PS-5Z329Z00045#1 Rev 1.rdl 1/4/2012 1:18:08 PM

D-01