CP&L

Carolina Power & Light Company
P.O. Box 10429
Southport, NC 28461-0429

December 20, 1999

SERIAL: BSEP 99-0176

U. S. Nuclear Regulatory Commission
ATTN: Document Control Desk
Washington, DC 20555-0001

BRUNSWICK STEAM ELECTRIC PLANT, UNIT NOS. 1 AND 2
DOCKET NOS. 50-325 AND 50-324/LICENSE NOS. DPR-71 AND DPR-62
EVALUATION OF CONTAINMENT INSPECTION PROGRAM RELIEF REQUEST CIP-11
(NRC TAC NOS. MA4166 AND MA4167)

Gentlemen:

Summary

By letter dated October 28, 1998, Carolina Power & Light (CP&L) Company submitted relief requests pertaining to implementation of certain American Society of Mechanical Engineers (ASME) Boiler and Pressure Vessel Code, Section XI, Subsections IWE and IWL requirements for the Brunswick Steam Electric Plant (BSEP), Unit Nos. 1 and 2. On August 10, 1999, the NRC issued its evaluation of these relief requests. The purpose of this letter is to request NRC reconsideration of the denial of one relief request, designated as Relief Request CIP-11, with respect to the visual examination requirements of ASME Code Examination Category E-A, Item E1.20 for the containment vent system.

Background

Relief Request CIP-11 requested relief from the ASME Code, Section XI, Subsection IWE, Table IWE-2500-1, Examination Category E-A, Items Nos. E1.12 and E1.20, which requires a visual (VT-3) examination of the accessible surface areas of the containment vessel during the inspection interval. As an alternative, CP&L proposed: (1) the performance of a general visual examination of the accessible surface areas of the containment during the first containment inspection interval, (2) performance of a detailed visual examination when evidence of degradation is detected by the examiners, (3) preparation of an engineering evaluation approved by a Registered Professional Engineer evaluating the suspect area if a detailed visual examination could not be performed, (4) having a Registered Professional Engineer periodically witness the performance of the examinations, and (5) examining the accessible surface areas of the containment vent system once per inspection period.

A047

PDR ADOCK 05000324

In its Safety Evaluation issued August 10, 1999, the NRC stated that Relief Request CIP-11 was denied for "(1) the wetted surfaces of submerged areas of the containment vessel pressure retaining boundary and (2) vent system in BWRs." The NRC Safety Evaluation included the following information as part of the basis for the denial:

> Although the staff finds that a general visual examination is generally sufficient to examine accessible surface areas of the containment vessel, the staff finds that Items E1.12 (Accessible surface areas of the containment vessel pressure retaining boundary) and E1.20 (accessible surface areas of the vent system in BWRs) include wetted surfaces of submerged areas and flow channeling devices within containment vessels. These areas are key locations susceptible to degradation mechanisms that could impair the leaktight integrity of the containment."

Request For Reconsideration

CP&L is requesting the NRC reconsider the denial of Relief Request CIP-11 with respect to the ASME Code Examination Category E-A, Item E1.20 visual examinations for the containment vent system.

CP&L's original request proposed, as an alternative to the VT-3 examination at the end of the ten-year interval, a visual examination of the accessible surface areas of the vent system once per inspection period (i.e., three examinations during the ten-year inspection interval). In contrast, the examination schedule in ASME Code Examination Category E-A, Item E1.20 only requires a visual examination to be performed once during the ten-year inspection interval.

The enclosed figure depicts the BSEP containment vent system and its connection between the drywell the wetwell (i.e., the torus). The BSEP containment vents, vent header, and a major portion of each of the downcomers are not submerged; therefore, these portions of the vent system are not a location susceptible to the degradation mechanisms that could occur in the submerged areas of the torus. These non-submerged areas of the vent system are accessible for performance of a general visual examination.

CP&L has concluded that performance of a general visual examination of the accessible (i.e., non-submerged) portions of the containment vent system during each inspection period will result in detection, evaluation, and correction of any potential degradation of the accessible surface areas. Under the proposed alternative, CP&L will still perform the VT-3 examination of the submerged surface areas of the vent system (i.e., the submerged portions of the downcomers) in accordance with the examination schedule in Examination Category E-A, Item E1.20 (i.e., at the end of the ten-year interval). On this basis, CP&L requests the NRC reconsider the denial of Relief Request CIP-11 as it applies to the accessible (i.e., non-submerged) portions of BSEP containment vent system.

Please refer any questions regarding this submittal to Mr. Warren J. Dorman, Supervisor - Licensing, at (910) 457-2068.

Sincerely,

Keith R. Jury

Keith R. Jury
Manager - Regulatory Affairs
Brunswick Steam Electric Plant

WRM/wrm

Enclosure: Drawing of Pressure Suppression Chamber

cc: U. S. Nuclear Regulatory Commission, Region II
ATTN: Mr. Luis A. Reyes, Regional Administrator
Atlanta Federal Center
61 Forsyth Street, SW, Suite 23T85
Atlanta, GA 30303-3415

U. S. Nuclear Regulatory Commission
ATTN: Mr. Theodore A. Easlick, NRC Senior Resident Inspector
8470 River Road
Southport, NC 28461-8869

U. S. Nuclear Regulatory Commission
ATTN: Mr. Allen G. Hansen (Mail Stop OWFN 8G9)
11555 Rockville Pike
Rockville, MD 20852-2738

Ms. Jo A. Sanford
Chair - North Carolina Utilities Commission
P.O. Box 29510
Raleigh, NC 27626-0510

Division of Boiler and Pressure Vessel
North Carolina Department of Labor
ATTN: Mr. Jack Given, Assistant Director of Boiler & Pressure Vessels
4 West Edenton Street
Raleigh, NC 27601-1092

ENCLOSURE

BRUNSWICK STEAM ELECTRIC PLANT, UNIT NOS. 1 AND 2
DOCKET NOS. 50-325 AND 50-324/LICENSE NOS. DPR-71 AND DPR-62
EVALUATION OF CONTAINMENT INSPECTION PROGRAM RELIEF REQUEST CIP-11
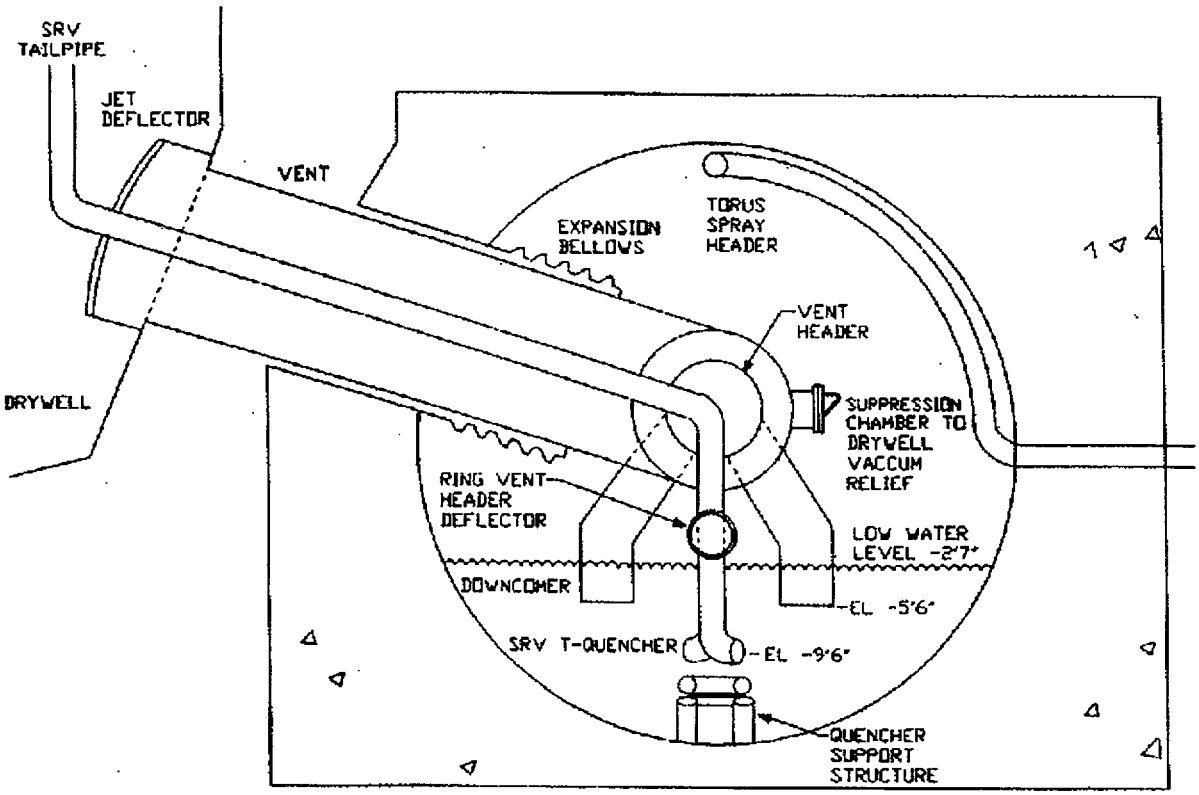
Drawing of Pressure Suppression Chamber