WOLF CREEK
NUCLEAR OPERATING CORPORATION

Britt T. Mc-Kinney
Vice President Plant Operations
and Plant Manager

AUG 1 3 1999

WO 99-0069

U. S. Nuclear Regulatory Commission
ATTN: Document Control Desk
Mail Station P1-137
Washington, D. C. 20555

Reference: Initial Licensed Operator Examination Submittal of May 15, 1999

Subject: Docket No. 50-482: Modification of Examination Questions

Gentlemen:

Wolf Creek Nuclear Operating Corporation licensed operator candidates were given their written examination on July 20, 1999. The simulator examinations and job performance measures were given July 26 through July 29, 1999. Exam analysis, conducted after the examinations were given, identified that the answer key for one question on the written test and event classification for one job performance measure required modification.

The enclosure provides a description of and justification for the proposed modification. Technical references are also enclosed.

If you have questions regarding the modification of these two examination items, please contact me at (316) 364-4112, or Mr. Jack Pippin at (316) 364-4166.

Very truly yours,

Britt T. Mc-Kinney

CCW/rlr

Enclosure

cc: J. N. Donchew (NRC), w/o
D. N. Graves (NRC), w/o
E. W. Merschoff (NRC), w/o
S. D. McCrory (NRC), w/e
Senior Resident Inspector (NRC), w/o

Enclosure 1

Modification to Wolf Creek Initial License Exam of July 26, 1999

1. Written Exam

- Question 052
- Correct Answer: B
- The original question submittal had "A" as the correct answer. During the analysis of those questions missed by 50% or more of the applicants it was determined that "B" is the correct answer. The "A" answer is based on a pressurizer pressure input of 705 psia. The pressurizer pressure instrumentation has a range of 1700 - 2500 psig. It would not be operable at 705 psia. The input available at lower pressures is wide range RCS pressure. It was reading 731 psia. The combination of 731 psia and 492°F places RCS subcooling at 16°F. This corresponds to answer "B".
- The applicants requested a clarification as to where the subcooling indication was being read (i.e. computer point or control room console). The clarification "on the main control board (RL022)" was made to the whole group taking the exam.
- Facility Recommendation: Change correct answer from "A" to "B".
- Technical References: Attached

2. Administrative JPM Change

- JPM Number: ADU-SRO-A.4
- Classify NRC Dynamic scenario #4
- Event classification should be from the event path of EAL-5, Fuel Element Failure. The correct path is FEF1→FEF2→FEF3→FEF5→**SITE AREA EMERGENCY**. EAL-8 does provide the correct classification for this event but EAL-5 should be selected based on EPP 06-005, Emergency Classification. If the event fits more than one EAL and results in an identical classification, then the classification shall be made using the first EAL encountered.
- Facility Recommendation : Change 2.* from SFM1→SSFM4→SSFM5→ SSFM6→ **SITE AREA EMERGENCY** to FEF1→FEF2→FEF3→FEF5→**SITE AREA EMERGENCY**.
- Technical References: Attached

Question Number	052
Question	The Operating Crew is performing ES-04 "Natural Circulation Cooldown". The following values are current conditions: • # OF CRDM Fans Running 4 • WR Hot Leg 1 Temp 488°F • WR Cold Leg 1 Temp 465°F • WR Cold Leg 2 Temp 470°F • Core Exit Thermocouples 492°F • RCS Pressure 731 psia • Pressurizer Pressure 705 psia What would be the displayed value for RCS Subcooling Margin? on the main control board (RL022). A. 12°F B. 16°F C. 20°F D. 38°F
Answer	A (Revised answer is B)
Allowed references	Steam Tables
LP and objective	SY1300202, Rev. 005 Obj. 4, Steam Tables
WCGS procedure - print references	None
NRC KA Topic	002 K5.17 Knowledge of the operational implications of the following concepts as they apply to the RCS: need for monitoring in-core thermocouples during natural circulation.
NRC KA topic importance factors	3.8/4.2
NRC 1122 KA - . 10CFR55 41/43 tie	41.5/45.7
NRC difficulty rating	Not Available
WCGS difficulty rating and explanation	A3 - Higher Order Question. The candidate must look at the existing parameters and determine which ones would be feeding the subcooling monitor calculation. This information must then be applied to the steam tables to calculate the value of subcooling.
Distracter explanation and references	A. Incorrect - This answer is subcooling based on pressurizer pressure of 705 psia. This is not provided to the subcooling margin monitor because these pressure transmitters have a lower range of 1700 psig. B. Correct - This answer is correct because it uses RCS pressure of 731 psia. This is wide range RCS pressure which has a range of 0 - 3000 psig. It would be the pressure reference because pressurizer pressure lower range is

	1700 psig. The saturation temperature for 731 psia is 508°F. The highest temperature parameter is 492°F. This gives 16°F subcooling. C. Incorrect - This answer is incorrect because it uses RCS pressure of 731 psia and the WR hot leg temperature of 488°F. This is a plausible distracter because both feed the subcooling monitor. D. Incorrect - This answer is incorrect because it uses RCS pressure of 731 psia and the WR cold leg 2 temperature of 470°F. This is a plausible distracter because both feed the subcooling monitor.
NRC ES-401 Tier and section location	SRO Tier 2 Group 2 RO: Tier 2 Group 2
Question original source	Modified Bank
Additional comments	

Objective 4: Core Subcooling Monitor

Introduction

The Core Subcooling Monitoring System functions to monitor RCS subcooling and provide both local and remote indications and alarms.

Objective

Explain the function and operation of the Core Subcooling Monitor

Content:

The Core Subcooling Monitoring System is comprised of two trains. Refer to drawing WCGS-BB-112. Each train receives inputs from the following:

- 25 Core Exit Thermocouples (TCs)
- 3 Thermocouple Reference Junction RTDs (compensation for TCs)
- 2 Wide Range Loop T_{hot} and 2 Wide Range Loop T_{cold} channels
- 1 Wide Range and 2 Narrow Range pressure channels

CORE SUBCOOLING MONITOR SYSTEM

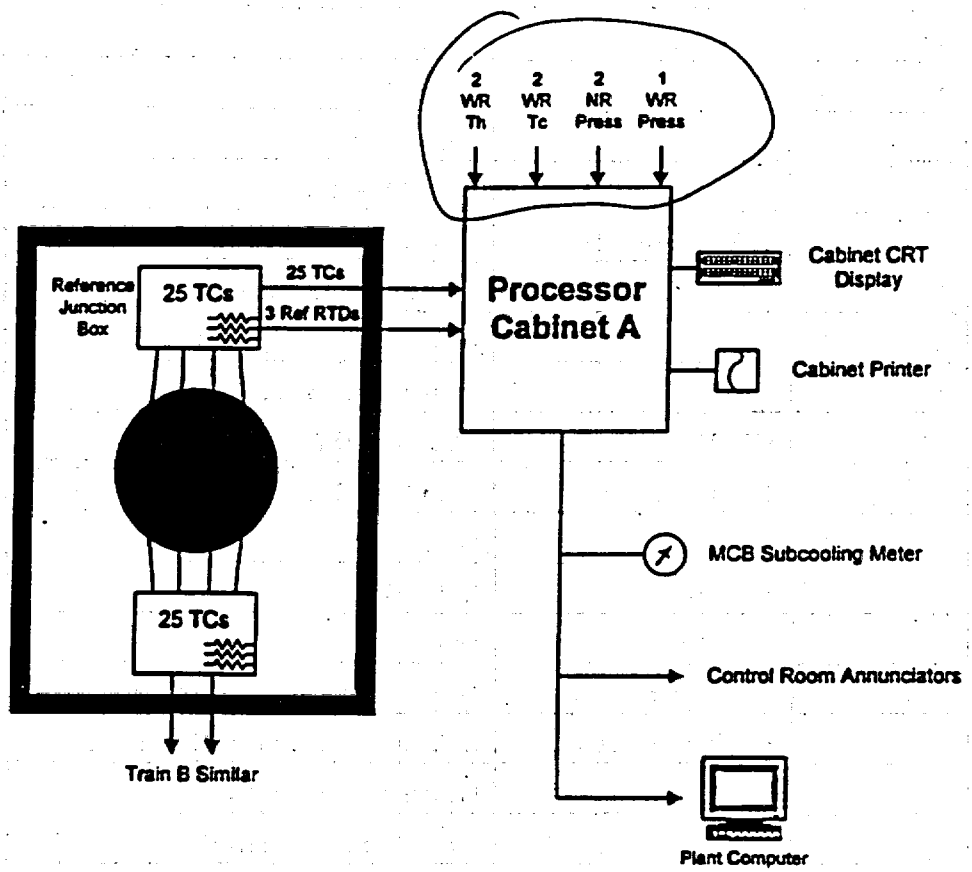

WCGS-BB-112

PROCESS

Specific instrumentation inputs to the Core Subcooling Monitor are as follows:

TRAIN	INSTRUMENT	DESCRIPTION
A	TE-413A	Loop 1 WR T_{hot}
A	TE-423A	Loop 2 WR T_{hot}
A	TE-433B	Loop 3 WR T_{cold}
A	TE-443B	Loop 4 WR T_{cold}
A	25 Thermocouples	Half of the Incore Thermocouples
A	3 Reference RTDs	Reference Junction for TC Correction
A	PT-455	Pressurizer Pressure (NR)
A	PT-457	Pressurizer Pressure (NR)
A	PT-405	RCS Pressure (WR)
B	TE-413B	Loop 1 WR T_{cold}
B	TE-423B	Loop 2 WR T_{cold}
B	TE-433A	Loop 3 WR T_{hot}
B	TE-443A	Loop 4 WR T_{hot}
B	25 Thermocouples	Other half of the Incore Thermocouples
B	3 Reference RTDs	Reference Junction for TC Correction
B	PT-456	Pressurizer Pressure (NR)
B	PT-458	Pressurizer Pressure (NR)
B	PT-403	RCS Pressure (WR)

System microprocessors calculate core saturation temperature for the RCS based on auctioneered low RCS pressure and auctioneered high wide range or thermocouple temperature. Meters (BB TI-1390A & 1390B) display subcooling on Main Control Board panel RL022. The bottom of the meter is green with a range of 20 - 200°F subcooled, the middle is a faded yellow with a range from 5 - 20°F subcooled, and the top is red with a range of 5°F subcooled to 2000°F superheated. The Plant Computer also receives subcooling information.

The processor cabinet (RP081A/ B) is located in the Control Room near the 7300 Process Protection Racks. Various system information (e.g., individual thermocouple readings, individual pressures, reference junction temperatures) may be printed out or displayed on the CRT at the cabinet. Operating instructions are posted inside the cabinet door.

WCRE-02, PART II, Rev 1.3

POINT ID SUMMARY DATA BASE FULL REPORT DATE = 08/06/98 TIME = 12:28:06 PAGE NUMBER 1183

ANALOG INPUT POINT TYPE

```
POINT ID ............... 01: BRP0153A
POINT ID  DESCRIPTION . 02: RCPA 01 REAL DELTA P NELOOP ONLY
STRINGER 1 ..........   03: PT0153        STRINGER 2 ........      .. 04: BRP0153A
PROCESSING TYPE ....... 05: POLY           SPARE 1 ............... 06: S
REVISION NUMBER ....... 07:   2            REVISION DATE ......... 08: 03/09/95
REVISION TIME ......... 09: 13:59:02       SPDS POINT ............ 10: N
NRC 1.97/EEDS POINT ... 11: N              PLANT SYSTEM .......... 12: RR
ALARM TYPES DESIGNATION 13: 1              ALARM GROUP DESIGNATION 14:
PROCESSING FREQUENCY .. 15: D              PROC CONTROL LOGICALS.. 16: TTTTTTTTTT
ENGINEERING LIMIT HIGH  17:   400.0        ENGINEERING LIMIT LOW . 18:     0.0
ENGINEERING UNITS ..... 19: PSID           DISPLAYED FRACT DIGITS. 20: 1
COMPENSATION LIMITS .... 21:    30.0       ALARM PRIORITY ........ 22: 1
BLOCKING CNTRL LOGICALS 23: ********
```

PLANT MODE	ALM HI HI	ALARM HIGH	ALARM LOW	ALM LO LO
POWER OPERATION ... 24: NA	25: NA	26: NA	27:	200.0
STARTUP .... 28: NA	29: NA	30: NA	31:	200.0
HOT STANDBY .... 32: NA	33: NA	34: NA	35:	200.0
HOT SHUTDOWN ...... 36: NA	37: NA	38: NA	39:	200.0
COLD SHUTDOWN ..... 40: NA	41: NA	42: NA	43:	200.0
REFUELING .... 44: NA	45: NA	46: NA	47: NA	

```
REDUNDANT POINT ....... 54:                REDUNDANT TOLERANCE ... 55:
ALARM CUTOUT POINT .... 56:                ALARM CUTOUT STATUS ... 57:
ALARM DEADBAND ........ 58:      4.0       SPECIAL ALARM PROCESSOR 59:
INPUT POINT 1 ......... 60:                INPUT POINT 2 ......... 61:
INPUT POINT 3 ......... 62:                INPUT POINT 4 ......... 63:

POLYNOMIAL ORDERS ..... 64: 1

     C0 65:   0.0000000000000E+00      C1 66:   0.6000000000000E+02
     C2 67:                            C3 68:
     C4 69:                            C5 70:

CALIBRATION DATE ...................... 71:
REFERENCE JUNCTION TEMPERATURE POINT . 72:
OPEN THERMOCOUPLE DETECTION ENABLE ... 73: N

ADC AMPLIFICATION CODE  80:  0
INPUT SIGNAL LIMIT HIGH 81:    10.1     INPUT SIGNAL LIMIT LOW . 82:    -0.1
SENSOR LIMIT HIGH ..... 83:    10.1     SENSOR LIMIT LOW ...... 84:    -0.1
REASONABLE LIMIT HIGH . 85:    10.0     REASONABLE LIMIT LOW ... 86:     0.0
SENSOR ELECTRICAL UNITS 87: V           SENSOR TYPE ........... 88: VA
SPARE 2 ............... 89: 0           SPARE 3 ............... 90:
REFERENCE DRAWING ..... 91:
VENCA OR STD CHASSIS .. 92:                     LL
INSTRUMENT/WINDOW NO. . 93: PD/153
CABLE NUMBER .......... 94: 5BCR05A/B   HARDWARE CHANNEL NUMBER 95: 12040804
CPI MUX CABINET NUMBER  96: RJ049
MUX TERMINATION ....... 97: 01PT710-0000-*N -*N
SIGNAL TIE-IN CABINET . 98: RJ049
SIGNAL CORD CARD NUMBER 99:
MUX CARD NUMBER .......100:
MUX LOCATION ..........101:              WCRI ITEM NUMBER ......102: RJ196013
```

POINT ID SUMMARY DATA BASE FULL REPORT DATE = 08/06/98 TIME = 12:28:06 PAGE NUMBER 1184

ANALOG INPUT POINT TYPE

```
POINT ID ............... 01: RRP0403
POINT ID  DESCRIPTION . 02: RC STE WR LP CH4 PRESS
STRINGER 1 ............ 03: PT0403        STRINGER 2 ........      .. 04: RRP0499A
PROCESSING TYPE ....... 05: POLY           SPARE 1 ............... 06: N
REVISION NUMBER ....... 07:   5            REVISION DATE ......... 08: 10/12/94
REVISION TIME ......... 09: 15:11:18       SPDS POINT ............ 10: Y
NRC 1.97/EEDS POINT ... 11: N              PLANT SYSTEM .......... 12: RR
ALARM TYPES DESIGNATION 13: 1              ALARM GROUP DESIGNATION 14:
PROCESSING FREQUENCY .. 15: D              PROC CONTROL LOGICALS.. 16: TTTTTTTTTT
ENGINEERING LIMIT HIGH  17:  3000.0        ENGINEERING LIMIT LOW  18:     0.0
ENGINEERING UNITS ..... 19: PSIG           DISPLAYED FRACT DIGITS. 20: 1
COMPENSATION LIMITS .... 21:     5.0       ALARM PRIORITY ........ 22: 1
BLOCKING CNTRL LOGICALS 23: ********
```

PLANT MODE	ALM HI HI	ALARM HIGH	ALARM LOW	ALM LO LO
POWER OPERATION ... 24:	2485.0 25: NA	26: NA	27:	1400.0
STARTUP 28:	2485.0 29: NA	30: NA	31:	1400.0
HOT STANDBY 32:	2485.0 33: NA	34: NA	35:	1400.0
HOT SHUTDOWN 36:	2485.0 37: NA	38: NA	39:	1400.0
COLD SHUTDOWN 40:	2485.0 41: NA	42: NA	43:	1400.0
REFUELING .... 44: NA	45: NA	46: NA	47: NA	

```
REDUNDANT POINT ....... 54:                REDUNDANT TOLERANCE ... 55:
ALARM CUTOUT POINT .... 56:                ALARM CUTOUT STATUS ... 57:
ALARM DEADBAND ........ 58:     10.0       SPECIAL ALARM PROCESSOR 59:
INPUT POINT 1 ......... 60:                INPUT POINT 2 ......... 61:
INPUT POINT 3 ......... 62:                INPUT POINT 4 ......... 63:

POLYNOMIAL ORDERS ..... 64: 1

     C0 65:   0.0000000000000E+00      C1 66:   0.3000000000000E+03
     C2 67:                            C3 68:
     C4 69:                            C5 70:

CALIBRATION DATE ...................... 71:
REFERENCE JUNCTION TEMPERATURE POINT . 72:
OPEN THERMOCOUPLE DETECTION ENABLE ... 73: N

ADC AMPLIFICATION CODE  80:  0
INPUT SIGNAL LIMIT HIGH 81:    10.1     INPUT SIGNAL LIMIT LOW . 82:    -0.1
SENSOR LIMIT HIGH ..... 83:    10.1     SENSOR LIMIT LOW ...... 84:    -0.1
REASONABLE LIMIT HIGH . 85:    10.0     REASONABLE LIMIT LOW ... 86:     0.0
SENSOR ELECTRICAL UNITS 87: V           SENSOR TYPE ........... 88: VA
SPARE 2 ............... 89: 0           SPARE 3 ............... 90:
REFERENCE DRAWING ..... 91:
VENCA OR STD CHASSIS .. 92:                     LM
INSTRUMENT/WINDOW NO. . 93: PD/403
CABLE NUMBER .......... 94: 6SR115/A   HARDWARE CHANNEL NUMBER 95: LM030302
CPI MUX CABINET NUMBER  96: RJ049
MUX TERMINATION ....... 97: 01PT04-0000-0  -V
SIGNAL TIE-IN CABINET . 98: RJ049
SIGNAL CORD CARD NUMBER 99:
MUX CARD NUMBER .......100:
MUX LOCATION ..........101:              WCRI ITEM NUMBER ......103: RJ194087
```

RCS wide Range

ANALOG INPUT POINT TYPE

POINT ID ..... 01: [illegible]
POINT ID DESCRIPTION . 02: PZR CH3 PRESS
STRING 1 ..... 03: PT0456 STRING 2 ..... 04: [illegible]
PROCESSING TYPE ..... 05: POLY SPARE 1 ..... 06: N
REVISION NUMBER ..... 07: 7 REVISION DATE 08: 04/17/96
REVISION TIME ..... 09: 11:33:21 SPDS POINT ..... 10: N
NRC 1.97/ERDS POINT ... 11: N PLANT SYSTEM ..... 12: RB
ALARM TYPE DESIGNATION 13: 1 ALARM GROUP DESIGNATION 14:
PROCESSING FREQUENCY .. 15: 5 PROC CONTROL LOGICALS.. 16: [illegible]
ENGINEERING LIMIT HIGH 17: 2500.0 ENGINEERING LIMIT LOW 18: 1700.0
ENGINEERING UNITS ..... 19: PSIA DISPLAYED FRACT DIGITS 20: 1
COMPRESSION LIMITS .... 21: 2.5 ALARM PRIORITY 22: 1
BLOCKING CNTRL LOGICALS 23: [illegible]

PLANT MODE	ALM HI HI		ALARM HIGH		ALARM LOW		ALM LO LO	
POWER OPERATION ...	24: 2285.0	25:	2335.0	26:	2220.0	27:	1875.0	
STARTUP	28: 2285.0	29:	2335.0	30:	2220.0	31:	1875.0	
HOT STANDBY	32: 2285.0	33:	2335.0	34:	2220.0	35:	1875.0	
HOT SHUTDOWN	36: 2285.0	37:	2335.0	38:	2220.0	39:	1875.0	
COLD SHUTDOWN	40: 2285.0	41:	2335.0	42:	2220.0	43:	1875.0	
REFUELING	44: NA	45:	NA	46:	NA	47:	NA	

REDUNDANT POINT ..... 54: REDUNDANT TOLERANCE ... 55:
ALARM CUTOUT POINT .... 56: ALARM CUTOUT STATUS ... 57:
ALARM DEADBAND ..... 58: 5.0 SPECIAL ALARM PROCESSOR 59:
INPUT POINT 1 ..... 60: INPUT POINT 2 ..... 61:
INPUT POINT 3 ..... 62: INPUT POINT 4 ..... 63:

POLYNOMIAL DEGREE 64: 1

C0 65: 0.170000000000E+04 C1 66: 0.300000000000E+02
C2 67: C3 68:
C4 69: C5 70:

CALIBRATION DATE 71:
REFERENCE JUNCTION TEMPERATURE POINT . 72:
OPEN THERMOCOUPLE DETECTION ENABLE ... 73: N

ADC AMPLIFICATION CODE 80: 0
INPUT SIGNAL LIMIT HIGH 81: 10.1 INPUT SIGNAL LIMIT LOW . 82: -0.1
SENSOR LIMIT HIGH ..... 83: 10.1 SENSOR LIMIT LOW ..... 84: -0.1
REASONABLE LIMIT HIGH . 85: 10.0 REASONABLE LIMIT LOW ... 86: 0.0
SENSOR ELECTRICAL UNITS 87: V SENSOR TYPE ..... 88: VA
SPARE 2 ..... 89: 0 SPARE 3 ..... 90:
REFERENCE DRAWING 91:
FTSCA OR ETD CHASSIS .. 92: 1F
INSTRUMENT/WINDOW NO. . 93: PD/456
CABLE NUMBER ..... 94: 6SHL118/C HARDWARE CHANNEL NUMBER 95: 12020301
CPT NSE CABINET NUMBER 96: LJ049
NSE TERMINATION ..... 97: 01PPT06-0000-E -0
SIGNAL TTS-IN CABINET . 98: LJ049
SIGNAL COND CARD NUMBER 99:
NSE CARD NUMBER 100:
NSE LOCATION .....101: WORK ITEM NUMBER 102: RB-011

Pressurizer

ANALOG INPUT POINT TYPE

POINT ID 01: RBP0457
POINT ID DESCRIPTION . 02: PZR CH3 PRESS
STRING 1 ..... 03: PT0457 STRING 2 ..... 04: RBP0482A
PROCESSING TYPE ..... 05: POLY SPARE 1 ..... 06: N
REVISION NUMBER ..... 07: 6 REVISION DATE 08: 04/17/96
REVISION TIME ..... 09: 11:33:53 SPDS POINT ..... 10: N
NRC 1.97/ERDS POINT ... 11: N PLANT SYSTEM ..... 12: RB
ALARM TYPE DESIGNATION 13: 1 ALARM GROUP DESIGNATION 14:
PROCESSING FREQUENCY .. 15: 5 PROC CONTROL LOGICALS.. 16: [illegible]
ENGINEERING LIMIT HIGH 17: 2500.0 ENGINEERING LIMIT LOW 18: 1700.0
ENGINEERING UNITS ..... 19: PSIA DISPLAYED FRACT DIGITS 20: 1
COMPRESSION LIMITS .... 21: 2.5 ALARM PRIORITY 22: 1
BLOCKING CNTRL LOGICALS 23: [illegible]

PLANT MODE	ALM HI HI		ALARM HIGH		ALARM LOW		ALM LO LO	
POWER OPERATION ...	24: 2285.0	25:	2335.0	26:	2220.0	27:	1875.0	
STARTUP	28: 2285.0	29:	2335.0	30:	2220.0	31:	1875.0	
HOT STANDBY	32: 2285.0	33:	2335.0	34:	2220.0	35:	1875.0	
HOT SHUTDOWN	36: 2285.0	37:	2335.0	38:	2220.0	39:	1875.0	
COLD SHUTDOWN	40: 2285.0	41:	2335.0	42:	2220.0	43:	1875.0	
REFUELING	44: NA	45:	NA	46:	NA	47:	NA	

REDUNDANT POINT ..... 54: REDUNDANT TOLERANCE ... 55:
ALARM CUTOUT POINT .... 56: ALARM CUTOUT STATUS ... 57:
ALARM DEADBAND ..... 58: 5.0 SPECIAL ALARM PROCESSOR 59:
INPUT POINT 1 ..... 60: INPUT POINT 2 ..... 61:
INPUT POINT 3 ..... 62: INPUT POINT 4 ..... 63:

POLYNOMIAL DEGREE 64: 1

C0 65: 0.170000000000E+04 C1 66: 0.300000000000E+02
C2 67: C3 68:
C4 69: C5 70:

CALIBRATION DATE 71:
REFERENCE JUNCTION TEMPERATURE POINT . 72:
OPEN THERMOCOUPLE DETECTION ENABLE ... 73: N

ADC AMPLIFICATION CODE 80: 0
INPUT SIGNAL LIMIT HIGH 81: 10.1 INPUT SIGNAL LIMIT LOW . 82: -0.1
SENSOR LIMIT HIGH ..... 83: 10.1 SENSOR LIMIT LOW ..... 84: -0.1
REASONABLE LIMIT HIGH . 85: 10.0 REASONABLE LIMIT LOW ... 86: 0.0
SENSOR ELECTRICAL UNITS 87: V SENSOR TYPE ..... 88: VA
SPARE 2 ..... 89: 0 SPARE 3 ..... 90:
REFERENCE DRAWING 91:
FTSCA OR ETD CHASSIS .. 92: 1L
INSTRUMENT/WINDOW NO. . 93: PD/457
CABLE NUMBER ..... 94: SHL11C/A HARDWARE CHANNEL NUMBER 95: 12048701
CPT NSE CABINET NUMBER 96: LJ049
NSE TERMINATION ..... 97: 01PPT07-0000-E -0
SIGNAL TTS-IN CABINET . 98: LJ049
SIGNAL COND CARD NUMBER 99:
NSE CARD NUMBER 100:
NSE LOCATION .....101: WORK ITEM NUMBER 102: RB-011

ANALOG INPUT POINT TYPE

POINT ID 01: BBP0458
POINT ID DESCRIPTION . 02: PZR CH4 PRESS
SUMMER 1 ..... 03: PT0458
PROCESSING TYPE ..... 05: POLY
REVISION NUMBER 07: 6
REVISION TIME 09: 13:34:34
NRC 1.97/ERDS POINT ... 11: N
ALARM TYPES DESIGNATION 13: 1
PROCESSING FREQUENCY .. 15: A
ENGINEERING LIMIT HIGH 17: 2500.0
ENGINEERING UNITS ..... 19: PSIG
COMPRESSION LIMITS 21: 2.5
BLOCKING CNTRL LOGICALS 23: NNNNNNNN

SUMMER TYPE ? .. ": ZZ-0(53)A
SPARE 1 ..... 04: N
REVISION DATE 06: 04/17/96
SPDS POINT ..... 10: N
PLANT SYSTEM ..... 12: RB
ALARM GROUP DESIGNATION 14:
PROC CONTROL LOGICALS.. 16: YYYNNNNN
ENGINEERING LIMIT LOW . 18: 1700.0
DISPLAYED FRACT DIGITS. 20: 1
ALARM PRIORITY 22: 1

PLANT MODE	ALR HI HI	ALARM HIGH	ALARM LOW	ALR LO LO
POWER OPERATION ... 24:	2385.0 25:	2335.0 26:	2220.0 27:	1875.0
STARTUP 28:	2385.0 29:	2335.0 30:	2220.0 31:	1875.0
HOT STANDBY 32:	2385.0 33:	2335.0 34:	2220.0 35:	1875.0
HOT SHUTDOWN 36:	2385.0 37:	2335.0 38:	2220.0 39:	1875.0
COLD SHUTDOWN 40:	2385.0 41:	2335.0 42:	2220.0 43:	1875.0
REFUELING ..... 44: NA	45: NA	46: NA	47: NA	

REDUNDANT POINT 54:
ALARM CUTOUT POINT 56:
ALARM DEADBAND 58: 5.0
INPUT POINT 1 ..... 60:
INPUT POINT 3 ..... 62:

REDUNDANT TOLERANCE ... 55:
ALARM CUTOUT STATUS ... 57:
SPECIAL ALARM PROCESSOR 59:
INPUT POINT 2 ..... 61:
INPUT POINT 4 ..... 63:

POLYNOMIAL NUMBER 64: 1

C0 65: 0.170000000000E+04 C1 66: 0.800000000000E+02
C2 67: C3 68:
C4 69: C5 70:

CALIBRATION DATE 71:
REFERENCE JUNCTION TEMPERATURE POINT . 72:
OPEN THERMOCOUPLE DETECTION ENABLE ... 73: N

ADC AMPLIFICATION CODE 80: 0

INPUT SIGNAL LIMIT HIGH 81:	10.1	INPUT SIGNAL LIMIT LOW . 82:	-0.1
SENSOR LIMIT HIGH 83:	10.1	SENSOR LIMIT LOW 84:	-0.1
REASONABLE LIMIT HIGH . 85:	10.0	REASONABLE LIMIT LOW ... 86:	0.0
SENSOR ELECTRICAL UNITS 87: V		SENSOR TYPE ..... 88: VA	
SPARE 2 ..... 89: 0		SPARE 3 ..... 90:	
REFERENCE DRAWING 91:			
STDCA OR STD CHASSIS .. 92:		1E	
ENVIRONMENT/WINDOW NO. . 93:	FD/458		
CABLE NUMBER 94:	6XE110/A	HARDWARE CHANNEL NUMBER 95:	1E030702
CYI BOX CABINET NUMBER 96:	RJ049		
BOX TERMINATION 97:	01FT09-0000-0 -V		
SIGNAL TIX-IN CABINET . 98:	RJ049		
SIGNAL COND CARD NUMBER 99:			
BOX CARD NUMBER 100:			
BOX LOCATION 101:		WORK ITEM NUMBER 102:	RE-011

ANALOG INPUT POINT TYPE

POINT ID 01: ESP0462A
POINT ID DESCRIPTION . 02: PRESSURIZER RELIEF TANK P
SUMMER 1 ..... 03:
PROCESSING TYPE ..... 05: POLY
REVISION NUMBER 07: 3
REVISION TIME 09: 09:30:10
NRC 1.97/ERDS POINT ... 11: N
ALARM TYPES DESIGNATION 13: 1
PROCESSING FREQUENCY .. 15: F
ENGINEERING LIMIT HIGH 17: 100.0
ENGINEERING UNITS ..... 19: PSIG
COMPRESSION LIMITS 21: 5.0
BLOCKING CNTRL LOGICALS 23: NNNNNNNN

SUMMER 2 ..... 04: ESP0485A
SPARE 1 ..... 06: N
REVISION DATE 08: 03/31/92
SPDS POINT ..... 10: Y
PLANT SYSTEM ..... 12: RB
ALARM GROUP DESIGNATION 14:
PROC CONTROL LOGICALS.. 16: YYYNNNNN
ENGINEERING LIMIT LOW . 18: 0.0
DISPLAYED FRACT DIGITS. 20: 1
ALARM PRIORITY 22: 1

PLANT MODE	ALR HI HI	ALARM HIGH	ALARM LOW	ALR LO LO
POWER OPERATION ... 24:	86.0 25:	6.0 26:	3.0 27:	NA
STARTUP 28:	86.0 29:	6.0 30:	3.0 31:	NA
HOT STANDBY 32:	86.0 33:	6.0 34:	3.0 35:	NA
HOT SHUTDOWN 36:	86.0 37:	6.0 38:	3.0 39:	NA
COLD SHUTDOWN 40:	86.0 41:	6.0 42:	3.0 43:	NA
REFUELING 44:	86.0 45:	6.0 46:	3.0 47:	NA

REDUNDANT POINT 54:
ALARM CUTOUT POINT 56:
ALARM DEADBAND 58: 0.3
INPUT POINT 1 ..... 60:
INPUT POINT 3 ..... 62:

REDUNDANT TOLERANCE ... 55:
ALARM CUTOUT STATUS ... 57:
SPECIAL ALARM PROCESSOR 59:
INPUT POINT 2 ..... 61:
INPUT POINT 4 ..... 63:

POLYNOMIAL NUMBER 64: 1

C0 65: 0.000000000000E+00 C1 66: 0.100000000000E+02
C2 67: C3 68:
C4 69: C5 70:

CALIBRATION DATE 71:
REFERENCE JUNCTION TEMPERATURE POINT . 72:
OPEN THERMOCOUPLE DETECTION ENABLE ... 73: N

ADC AMPLIFICATION CODE 80: 0

INPUT SIGNAL LIMIT HIGH 81:	10.1	INPUT SIGNAL LIMIT LOW . 82:	-0.1
SENSOR LIMIT HIGH 83:	10.1	SENSOR LIMIT LOW 84:	-0.1
REASONABLE LIMIT HIGH . 85:	10.0	REASONABLE LIMIT LOW ... 86:	0.0
SENSOR ELECTRICAL UNITS 87: V		SENSOR TYPE ..... 88: VA	
SPARE 2 ..... 89: 0		SPARE 3 ..... 90:	
REFERENCE DRAWING 91:			
STDCA OR STD CHASSIS .. 92:		1F	
ENVIRONMENT/WINDOW NO. . 93:			
CABLE NUMBER 94:	5XC01A/D	HARDWARE CHANNEL NUMBER 95:	1E030703
CYI BOX CABINET NUMBER 96:	RJ049		
BOX TERMINATION 97:	01FT10-0000-*D -*C		
SIGNAL TIX-IN CABINET . 98:	RJ049		
SIGNAL COND CARD NUMBER 99:			
BOX CARD NUMBER 100:			
BOX LOCATION 101:		WORK ITEM NUMBER 102:	RJ192052

SY	FUNC	SEQ#	SUF	INSTRUMENT DESCRIPTION	SETPOINT/RANGE	ACCURACY	MFGR	MODEL NUMBER	SCR NO	SOURCE-DOC	CMPTR AD	I.S.G	R.V	E.M
BB	PT	0403		RCS WR PRESS RX BOT DWG:8756D37 SHT 36	0-3000 PSIG	+-0.5%	8080	763	XX-92-106	M-771-0284	REP0499	4	26	Y

SY	FUNC	SLO#	SUF	INSTRUMENT DESCRIPTION	SETPOINT/RANGE	ACCURACY	MFGR	MODEL NUMBER	SCR NO	SOURCE-DOC	CMPTR	AD	I.S.G	R.V	E.M
BB	PT	0458		PZR PRESS XMTR DWG:8756D37 SHT 12; MFGR: TOBAR; ~~M771-405~~	1780-2500 PSIG	+-0.5%	RMKS	32PA1212	YY-88-104	M-771-0329	REP0483		4	23	

File Point Map

Point ID

BBP0458 U1

Synonyms

Synonym 1: PT0458

Synonym 2: REP0483A

Live Information

Value: 2252.5

Quality: GOOD

Primary

Description: PZR CH4 PRESS

Engineering Units: PSIG

Point Type: POLY

Compression Limit: 2.500E0

Processing Frequency: 10 sec

Miscellaneous

Cable Number: 6SBR11D/A

Hardware Channel: 1E030702

Inst/Window: PD/458

Mux Termination: 01FFY09-0000-U -V

Signal Tie In Cab: RJ049

Sensor Elect. Units: V

Work Number: RE-011

Reference Drawing:

Alarm Limits

	Low Low	Low	High	High High
Power Operation	1.875E3	2.220E3	2.335E3	2.385E3
Startup	1.875E3	2.220E3	2.335E3	2.385E3
Hot Standby	1.875E3	2.220E3	2.335E3	2.385E3
Hot Shutdown	1.875E3	2.220E3	2.335E3	2.385E3
Cold Shutdown	1.875E3	2.220E3	2.335E3	2.385E3
Refuel	1.875E3	2.220E3	2.335E3	2.385E3

Operating Limits

Low: 1.700E3

High: 2.500E3

Pressurizer

File Point Map

Point ID

BBP0403 U1

Synonyms

Synonym 1: PT0403

Synonym 2: REP0499A

Point Information

Value: 2279.9

Quality: GOOD

Primary

Description: RC SYS WR LP CH4 PRESS

Engineering Units: PSIG

Point Type: POLY

Compression Limit: 5.000E0

Processing Frequency: 1 sec

Miscellaneous

Cable Number: 6SBR11B/A

Hardware Channel: 1E030302

Inst/Window: PD/403

Mux Termination: 01FFY04-0000-U -V

Signal Tie In Cab: RJ049

Sensor Elect. Units: V

Work Number: RJ194087

Reference Drawing:

Alarm Limits

	Low Low	Low	High	High High
Power Operation	1.400E3	1.400E3	2.485E3	2.485E3
Startup	1.400E3	1.400E3	2.485E3	2.485E3
Hot Standby	1.400E3	1.400E3	2.485E3	2.485E3
Hot Shutdown	1.400E3	1.400E3	2.485E3	2.485E3
Cold Shutdown	1.400E3	1.400E3	2.485E3	2.485E3
Refuel	1.400E3	1.400E3	2.485E3	2.485E3

Limits

Low: 0.000E0

High: 3.000E3

RCS Wide Range

7.0 PROCEDURE

7.1 Diagnosing And Classifying An Event

CAUTION

Outage/shutdown conditions should be given special consideration as they are likely to create abnormalities such as the loss of RCS pressure boundary (refueling, mid-loop operations, equipment hatch open, etc.). This type of boundary violation combined with a plant transient (loss of AC power, etc.) may create a worse situation than would be expected if the Unit was in power operations.

7.1.1 Upon recognition that an abnormal or emergency condition exists, the Shift Supervisor shall be immediately notified.

7.1.2 Plant parameters and instrument readings or any other symptoms which would be indicative of further systems degradation shall be monitored.

7.1.3 The appropriate EMGs and OFNs shall be referenced and any actions called for, based upon the indicated symptoms, shall be taken.

7.1.4 The EALs shall be used to determine whether or not the event fits the general description for any of the initiating conditions listed.

1. The EAL resulting in the highest classification shall be used to classify the event.
2. IF the event fits more than one EAL and results in an identical emergency classification, THEN the classification shall be made using the first EAL encountered.
3. Step numbers of the EAL used to classify the event shall be entered on EPF 06-007-01, WOLF CREEK GENERATING STATION EMERGENCY NOTIFICATION, to show the path used to make the classification.

7.1.5 IF the event does not fit any of the EAL general descriptions, THEN the implications of the event should be evaluated and the emergency condition classified, if appropriate, based upon professional judgment. If no classification is warranted, no further action is required except to continue monitoring the event.

EMERGENCY ACTION LEVELS

EAL-5, FUEL ELEMENT FAILURE

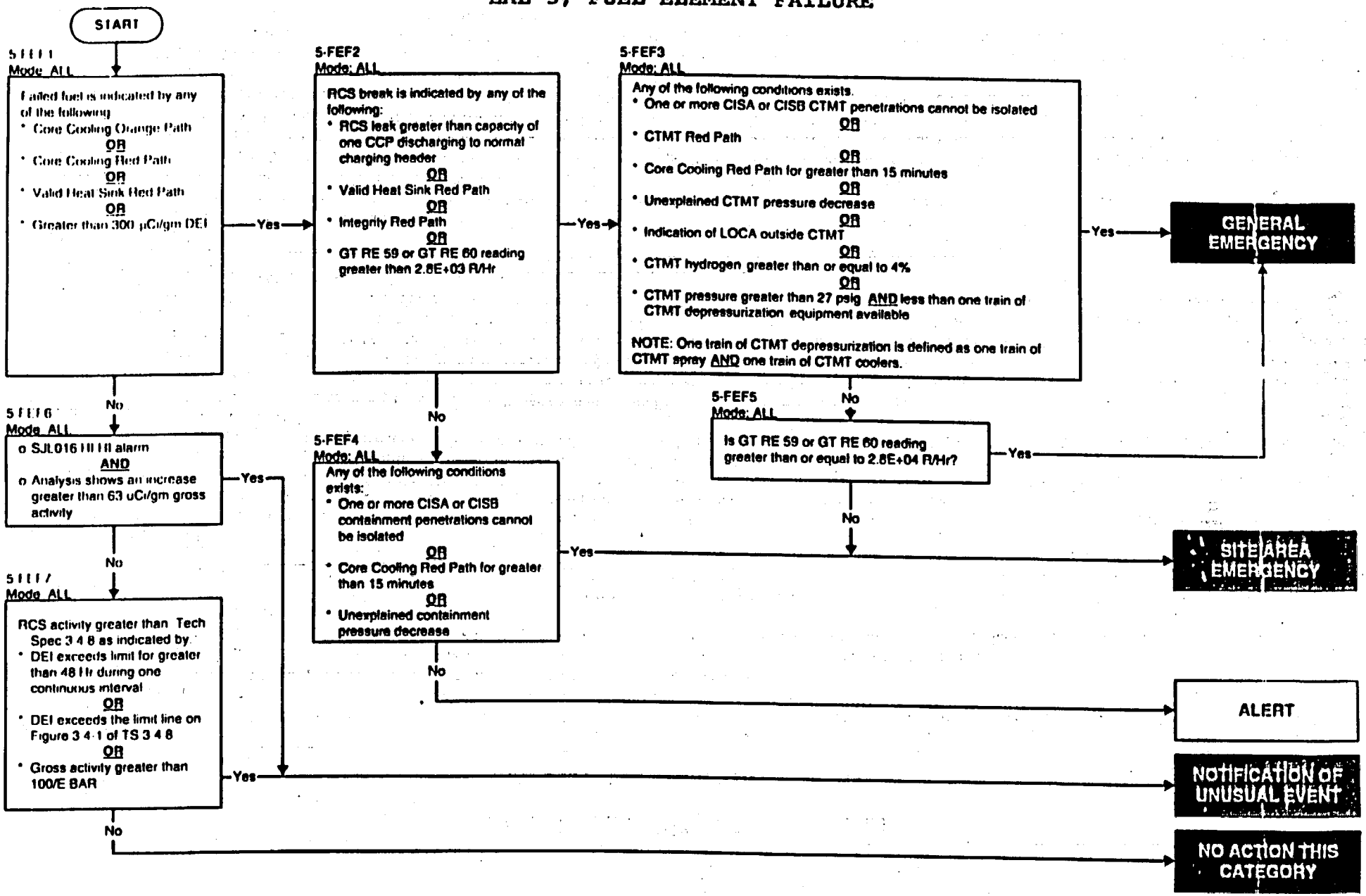

EMERGENCY ACTION LEVELS

BASES-5, FUEL ELEMENT FAILURE

5-FEF 1. - MODES: ALL

1. Critical Safety Function Status: This EAL is for using Critical Safety Function Status Tree (CSFST) monitoring and functional recovery procedures. RED path indicates an extreme challenge to the safety function. ORANGE path indicates a severe challenge to the safety function.

   Core Cooling - ORANGE indicates subcooling has been lost and that some clad damage may occur.

   Core Cooling - RED indicates significant superheating and core uncovery and is considered to indicate loss of the Fuel Clad Barrier.

   Heat Sink - RED indicates the steam generator heat sink function is under extreme challenge and thus these two items indicate potential loss of the Fuel Clad Barrier. "Valid" Heat Sink RED means to meet the requirements for entry into FR-H1.

2. Primary Coolant Activity Level: The 300 uCi/gm DEI assessment by the NUMARC EAL Task Force indicates that this amount of coolant activity is well above that expected for iodine spikes and corresponds to about 2% to 5% fuel clad damage. This amount of clad damage indicates significant clad heating and thus the Fuel Clad Barrier is considered lost.

5-FEF 2. - MODES: ALL

1. RCS Leak Rate: The "Potential Loss" EAL is based on the inability to maintain normal liquid inventory within the Reactor Coolant System (RCS) by normal operation of the Chemical and Volume Control System which is considered as one centrifugal charging pump discharging to the charging header at maximum rate.
2. Critical Safety Function Status: This EAL is for using Critical Safety Function Status Tree (CSFST) monitoring and functional recovery procedures. RED path indicates an extreme challenge to the safety function derived from appropriate instrument readings, and these CSFs indicate a potential loss of RCS barrier.

   Heat Sink - RED indicates the steam generator heat sink function is under extreme challenge and thus the Fuel Clad and RCS are threatened. "Valid" Heat Sink RED means to meet the requirements for entry into FR-H1.

   Integrity - RED indicates the RCS boundary is extremely challenged and thus with Failed Fuel two barriers would be gone.
3. Containment Radiation Monitoring: This reading is a value which indicates the release of reactor coolant, with elevated activity indicative of fuel damage, into the containment. The reading is calculated assuming the instantaneous release and dispersal of the reactor coolant noble gas and iodine inventory associated with a concentration of 300 uCi/gm dose equivalent I-131 into the containment atmosphere. Reactor coolant concentrations of this magnitude are several times larger than the maximum concentrations (including iodine spiking) allowed within technical specifications and are therefore indicative of fuel damage (approximately 2 - 5% clad failure depending on core inventory and RCS volume). This value is higher than that specified for RCS barrier Loss. Thus, this EAL indicates a loss of both the fuel clad barrier and a loss of RCS barrier. To be conservative, 2% clad failure and 10 hours after shutdown were selected from WCGS EPP 06 017, CORE DAMAGE ASSESSMENT METHODOLOGY.

5-FEF 3. - MODES: ALL

1. Containment Isolation Valve Status After Receipt of Automatic or Manual Phase A or B Isolation: The failure to complete phase A or B isolation of each containment penetration by at least one device in each penetration if by design that penetration is assumed to isolate means the containment barrier must be considered breached. Note that ESW does not receive an automatic or manual isolation signal. The intent of this basis is only applicable to those penetrations designed to isolate by an automatic signal.
2. Using Critical Safety Function Status Tree (CSFST) Monitoring and Functional recovery procedures: RED path indicates an extreme challenge to the safety function derived from appropriate instrument readings and/or sampling results, and thus represents a potential loss of containment. Conditions leading to a containment RED path result from RCS barrier and/or Fuel Clad Barrier Loss. Thus, this EAL is primarily a discriminator between Site Area Emergency and General Emergency representing a potential loss of the third barrier.

   In this EAL, the function restoration procedures are those emergency operating procedures that address the recovery of the core cooling critical safety function. The procedure is considered effective if the core temperature is decreasing or if the vessel level is increasing.

   The conditions in this potential loss EAL represent imminent melt sequence which, if not corrected, could lead to vessel failure and an increased potential for containment failure. In conjunction with the core exit thermocouple EALs in the Fuel and RCS barriers, this EAL would result in the declaration of a General Emergency - loss of two barriers and the potential loss of a third. If the function restoration procedures are ineffective, there is no "success" path.

   Severe accident analyses (e.g., NUREG-1150) have concluded that function restoration procedures can arrest core degradation within the reactor vessel in a significant fraction of the core damage scenarios, and that the likelihood of containment failure is very small in these events. Given this, it is appropriate to provide a reasonable period to allow function restoration procedures to arrest the core melt sequence. Whether or not the procedures will be effective should be apparent within 15 minutes. The declaration should be made as soon as it is determined that the procedures have been, or will be ineffective.

(Continued)

EMERGENCY ACTION LEVELS

BASES-5, FUEL ELEMENT FAILURE

5-FEF 3. - MODES: ALL

1 After the Containment is initially pressurized a sudden decrease can indicate loss of Containment. However, care must be exercised here as action of Containment Coolers and Sprays as well as RCS pressure decrease can cause slow decrease in containment pressure.

If containment integrity is in question other items to check to verify the presence of leakage are the area and process rad monitors for the auxiliary building to see if an unexplained increase in radiation readings is noted. Also the equipment and emergency escape hatches should be considered and checked for possible leakage.

Likewise, at the onset of an event determined to be inside Containment, failure of the containment to pressurize may be indicative of a significant leak path.

This condition is to provide indication of loss of containment.

4 "Indications of LOCA outside Containment" is intended to allow the use of Area Radiation and Process Radiation Monitors, radiological surveys, sump level increase outside containment, etc to determine loss of containment. It is not necessary to be in EMG C-12, although if that is where the plant status puts the operator then containment is lost.

5 Existence of an explosive mixture means an H2 Concentration greater than 4% and the potential for an explosive mixture and possible damage to Containment exists.

6. Having less than one train of Containment Depressurization Systems is a potential loss of Containment in that the heat removal/depressurization system (i.e. Containment Spray and Containment Coolers) are either lost or performing in a degraded manner, as indicated by Containment pressure greater than 27 PSIG (setpoint at which the equipment was supposed to operate). Having a Cooler set on one train and Spray Pump on the other train constitutes one train and does not yield a YES answer.

5-FEF 4. - MODES: ALL

1. Containment Isolation Valve Status After Receipt of Automatic or Manual Phase A or B Isolation: The failure to complete phase A or B isolation of each containment penetration by at least one device in each penetration if by design that penetration is assumed to isolate means the containment barrier must be considered breached. Note that ESW does not receive an automatic or manual isolation signal. So the intent of this basis is only applicable to those penetrations designed to isolate by an automatic signal.

2 Using Critical Safety Function Status Tree (CSFST) Monitoring and Functional recovery procedures: RED path indicates an extreme challenge to the safety function derived from appropriate instrument readings and/or sampling results, and thus represents a potential loss of containment. Conditions leading to a containment RED path result from RCS barrier and/or Fuel Clad Barrier Loss, thus this EAL is primarily a discriminator between Site Area Emergency and General Emergency representing a potential loss of the third barrier.

In this EAL, the function restoration procedures are those emergency operating procedures that address the recovery of the core cooling critical safety function. The procedure is considered effective if the core temperature is decreasing or if the vessel level is increasing.

The conditions in this potential loss EAL represent imminent melt sequence which, if not corrected, could lead to vessel failure and an increased potential for containment failure. In conjunction with the core exit thermocouple EALs in the Fuel and RCS barriers, this EAL would result in the declaration of a General Emergency - loss of two barriers and the potential loss of a third. If the function restoration procedures are ineffective, there is no "success" path.

Severe accident analyses (e.g., NUREG-1150) have concluded that function restoration procedures can arrest core degradation within the reactor vessel in a significant fraction of the core damage scenarios, and that the likelihood of containment failure is very small in these events. Given this, it is appropriate to provide a reasonable period to allow function restoration procedures to arrest the core melt sequence. Whether or not the procedures will be effective should be apparent within 15 minutes. The declaration should be made as soon as it is determined that the procedures have been, or will be ineffective. The reactor vessel level chosen should be consistent with the emergency response procedures applicable to the facility.

3. After the Containment is initially pressurized a sudden decrease can indicate loss of Containment. However, care must be exercised here as action of Containment Coolers and Sprays as well as RCS pressure decrease can cause slow decrease in containment pressure.

At the onset of an event determined to be inside Containment, failure of the containment to pressurize may be indicative of a significant leak path. If containment integrity is in question other items to check to verify the presence of leakage are the area and process rad monitors for the auxiliary building to see if an unexplained increase in radiation readings is noted. Also the equipment and emergency escape hatches should be considered and checked for possible leakage.

This condition is to provide indication of loss of containment.

5-FEF 5. - MODES: ALL

This reading is a value which indicates significant fuel damage well in excess of the EALs associated with both loss of Fuel Clad and loss of RCS Barriers. A major release of radioactivity requiring offsite protective actions from core damage is not possible unless a major failure of fuel cladding allows radioactive material to be released from the core into the reactor coolant. Regardless of whether Containment is challenged, this amount of activity in Containment, if released, could have such severe consequences that it is prudent to treat this as a potential loss of Containment, such that a General Emergency declaration is warranted. NUREG-1228, "Source Estimations During Incident Response to Severe Nuclear Power Plant Accidents," indicates that such conditions do not exist when the amount of clad damage is less than 20%. Reading was taken from EPP 06-017, CORE DAMAGE ASSESSMENT METHODOLOGY.

EMERGENCY ACTION LEVELS

BASES-5, FUEL ELEMENT FAILURE

5-FEF 6. - MODES: ALL

This IC is included as an Unusual Event because it is considered to be a potential degradation in the level of safety of the plant and a potential precursor of more serious problems. This IC addresses coolant samples exceeding coolant technical specifications for iodine spike. Escalation of this IC to the Alert level is via the Fission Product Barrier Degradation Monitoring IC's. An increase of greater than 63 uCi/gm on the RCS Sample with the HI HI alarm on the letdown monitor is to ensure the alarm is valid.

5-FEF 7. - MODES: ALL

This IC addresses RCS Technical Specification Activity Limits being exceeded as an indication of a precursor to possibly worse activity levels. Note that on some Reactor Trips towards end of life with activity levels elevated but less than Technical Specification limits spikes can occur above these limits. The intent is for the levels to remain above these limits for extended time intervals in order to classify an NUE.

WCGS SRO/RO TRAINING PROGRAM
JOB PERFORMANCE MEASURE EVALUATION FORM

TASK: Given a plant event, classify the event with a 100% accuracy.

TASK/JTA: Knowledge of the emergency action level thresholds and classifications.

K/A #s: 2.4.41

References: AP 06-002, Rev. 0; APF 06-002-01, Rev. 0

Examinee's Name _____ SS No. ____-___-____ SRO___ RO___

The examinee's performance was evaluated against the standards in this JPM and determined to be:

SATISFACTORY ____ MARGINAL ____ UNSATISFACTORY ____

Reason, if MARGINAL or UNSATISFACTORY:

Estimated JPM completion Time: 15 min.

Actual Performance Time: _____min.

Location of Performance: Control Room ___ Simulator √

Method of Performance: Simulate ____ Perform √

Tools and Equipment: Simulator

Evaluators Signature: _____ Date _____

WCGS SRO RO TRAINING PROGRAM
JOB PERFORMANCE MEASURE EVALUATION FORM

Notes:
The examiner shall verify that the procedure revision for this JPM is current and that any changes against the referenced procedure does not invalidate this JPM.

Simulator Set-up:
Used with 1999 NRC exam Dynamic Scenario No. 4.

Initial Conditions:

Dynamic Scenario No. 4 has been completed. Classify the event.

WCGS SRO/RO TRAINING PROGRAM
JOB PERFORMANCE MEASURE EVALUATION FORM

Element #	Step #	Element	Standard	Score
1.*	N/A	Start Time _____ Analyze the event.	Utilize Emergency Action Levels, APF 06-002-01, to locate the emergency action level and start the event path.	S U

Comments:

2.	N/A	Classify the event.	Complete element 2.a.	N/A

Comments:

2.*	N/A	Event path from EAL-5, Fuel Element Failure:	FEF1→FEF2→FEF3→FEF5→ SITE AREA EMERGENCY	S U

Comments:

Termination: Properly classifying the event completes the JPM.

Stop Time _____

*Critical step

WCGS SRO RO TRAINING PROGRAM
JOB PERFORMANCE MEASURE EVALUATION FORM

Initial Conditions:

Dynamic Scenario No. 4 has been completed. Classify the event.

ATTACHMENT 3

FINAL WRITTEN EXAMINATION AND ANSWER KEYS

Final approved

Question Number	001
Question	Wolf Creek is operating at 88% power with all systems in normal configurations. The following indications are observed: • Rx power is RISING. • Tave is greater than Tref. • PZR PORV BB PCV 455A is OPEN. • PZR level is RISING. Which of the following would cause the above listed conditions to occur? A. An OT/ΔT turbine runback B. An uncontrolled rod withdrawal. C. A failed open S/G safety valve. D. Power range channel N-44 failed high.
Answer	B. An uncontrolled rod withdrawal.
Allowed references	None
LP and objective	SY1300100 Rev. 004, Obj. 7 & 8, PWR Generic Fundamentals, Chapter 5 SY 1300200 Rev. 8
WCGS procedure - print references	N/A
NRC KA Topic	001 AA2.05 Ability to determine and interpret the following as they apply to the continuous rod withdrawal: uncontrolled rod withdrawal, from available indications.
NRC KA topic importance factors	4.4/4.6
NRC 1122 KA - 10CFR55 41/43 tie	43.5/45.13
NRC difficulty rating	Not Available
WCGS difficulty rating and explanation	A3 - Higher order question. The student must understand how each of the distracter events would affect each of the observed indications. Difficulty level three is based on requiring knowledge of what could cause the listed response of each indication and analyzing each distracter to determine if that problem could affect each of the indications as observed.
Distracter explanation and references	A. Incorrect - The runback would not cause a power increase but the other three criteria would be satisfied. B. Correct - An uncontrolled rod withdrawal would cause all of the listed conditions to occur. C. Incorrect - A failed open safety valve would cause power to rise but Tave would be less than Tref, BB PCV 455A would not be open, and PZR level would be decreasing due to the cooldown. D. Incorrect - A power range channel failed high will give a rod withdrawal stop and an automatic insertion. Reactor will not increase. Tave will be less than Tref, BB PCV-455A will not open, and PZR level will be decreasing.
NRC ES-401 Tier and	SRO: Tier 1 Group 1

section location	RO: Tier 1 Group 2
Question original source	Bank
Additional comments	

Question 001

Wolf Creek is operating at 88% power with all systems in normal configurations. The following indications are observed:

- Rx power is RISING.
- Tave is greater than Tref.
- PZR PORV BB PCV 455A is OPEN.
- PZR level is RISING.

Which of the following would cause the above listed conditions to occur?

A. An OT/ΔT turbine runback

B. An uncontrolled rod withdrawal.

C. A failed open S/G safety valve.

D. Power range channel N-44 failed high.

Question Number	002
Question	The plant is at 100% Reactor power with all control systems in automatic when one control rod drops fully into the core. The governor valves are full open, Control Rods are parked at 229 steps and the plant does not trip. Which of the following statements correctly describes the plant response to this event, assuming no operator action? A. Reactor power decreases and RCS temperature decreases below program. B. Turbine MWs lower and RCS temperature stays on program. C. Reactor power decreases and RCS temperature stays on program. D. Turbine MWs constant and RCS temperature decreases below program.
Answer	A. Reactor power decreases and RCS temperature decreases below program.
Allowed references	None
LP and objective	GFES Chapter 5
WCGS procedure - print references	N/A
NRC KA Topic	003 AK1.04 Knowledge of the operational implications of the following concepts as they apply to dropped control rod: Effects of power level and control position on flux.
NRC KA topic importance factors	3.1/3.7
NRC 1122 KA - 10CFR55 41/43 tie	41.8/41.10/45.3
NRC difficulty rating	Not Available
WCGS difficulty rating and explanation	A3 - The candidate must understand that the dropped control rod will depress the flux level in one area of the core immediately decreasing Reactor power production. T_{hot} will decrease which will decrease the steam pressure therefore decreasing Turbine Megawatts. The Turbine is operated on the Load limiter preventing the governor valves from opening further to raise load. With T_{avg} dropping the Moderator Temperature Coefficient will attempt to raise power back up but without the governor valves opening further it will not be large enough to return the Reactor to 100% power.
Distracter explanation and references	A. Correct B. Incorrect - RCS Temperature will not remain on program as rods are parked in the full out position and will not be able to move out any further to compensate for the dropped rod. This is a plausible distractor in that Turbine Megawatts do lower and rods if not full out could maintain Temperature. C. Incorrect - Temperature will not remain on program. Plausible in that the Reactor Power will decrease and rods if not full out could maintain

	temperature. D. Incorrect - Turbine Power will decrease due to the reduced temperature. Plausible in that the candidate may suppose if temperature decreased enough the MTC would return the reactor to the precious power level.
NRC ES-401 Tier and section location	SRO: Tier 1 Group 1 RO: Tier 1 Group 2
Question original source	Songs April 99
Additional comments	NRC comment - Does not discriminate well. Does not negate assumption that flux starts at top. Answer - Replaced the question. Added governor valves full open

Question: 002

The plant is at 100% Reactor power with all control systems in automatic when one control rod drops fully into the core. The governor valves are full open, Control Rods are parked at 229 steps and the plant does not trip.

Which of the following statements correctly describes the plant response to this event, assuming no operator action?

A. Reactor power decreases and RCS temperature decreases below program.

B. Turbine MWs lower and RCS temperature stays on program.

C. Reactor power decreases and RCS temperature stays on program.

D. Turbine MWs constant and RCS temperature decreases below program.

Question Number	003
Question	The following plant conditions exist: • The plant is at full power. • Rod control is in auto. • The selected turbine impulse pressure instrument fails downscale. • No control rod motion occurs. Which one of the following would explain these events? A. The rods should have stepped inward which suggests an auto rod control failure (in addition to the impulse pressure instrument). B. The rods should not have moved since the low impulse pressure will also generate a block of auto rod motion. C. The rods should not have moved since Tref uses auctioneered high impulse pressure. D. Auto motion demand depends upon which impulse pressure instrument failed since Tref is selectable but the rod block always comes from PT-505.
Answer	A
Allowed references	None
LP and objective	SY1300100, Rev. 004, Obj. 7, 9, & 10
WCGS procedure - print references	M-761-00083 W06
NRC KA Topic	005 AK 2.01 Knowledge of the interrelations between the inoperable/stuck control rod and the following: controllers and positioners.
NRC KA topic importance factors	2.5/2.5
NRC 1122 KA - 10CFR55 41/43 tie	41.7/45.7
NRC difficulty rating	Not Available
WCGS difficulty rating and explanation	A3 - Higher order question. The student must evaluate the failure of the turbine impulse chamber pressure low with the existing plant conditions. This information is then integrated into determining the affect of this on the rod control system.
Distracter explanation and references	A. Correct - The selected channel inputs to rod control for the Tref signal. If Tref fails low then rods should step in. Failure of the rods to step in suggests an auto rod control failure. B. Incorrect - The impulse chamber failure generates a rod withdrawal stop only and does not prevent insertion. C. Incorrect - Tref for rod control is not auctioneered but this could be selected because the auctioneered high Tave signal does feed rod control.

	D. Incorrect - Tref and the rod stop come from the selected impulse chamber.
NRC ES-401 Tier and section location	SRO: Tier 1 Group 1 RO: Tier 1 Group 1
Question original source	Bank
Additional comments	

Question 003

The following plant conditions exist:

- The plant is at full power.
- Rod control is in auto.
- The selected turbine impulse pressure instrument fails downscale.
- No control rod motion occurs.

Which one of the following would explain these events?

A. The rods should have stepped inward which suggests an auto rod control failure (in addition to the impulse pressure instrument).

B. The rods should not have moved since the low impulse pressure will also generate a block of auto rod motion.

C. The rods should not have moved since Tref uses auctioneered high impulse pressure.

D. Auto motion demand depends upon which impulse pressure instrument failed since Tref is selectable but the rod block always comes from PT-505.

Question Number	004
Question	EMG E-1, Loss of Reactor or Secondary Coolant, Step 27 directs actions to isolate the SI accumulators if at least two hot legs temperatures are less than 375°F. The bases for this temperature ensures: A. conditions have been established which indicate full ECCS flow is no longer required. B. that RCS subcooling will be maintained after the accumulators are isolated. C. saturation pressure of the RCS exceeds the accumulator pressure after the accumulator water has been discharged to preclude nitrogen injection into the RCS. D. that the injected accumulator nitrogen has expanded sufficiently to warrant a determination of whether the reactor vessel head should be vented.
Answer	C
Allowed references	None
LP and objective	L01732320, Rev. 009
WCGS procedure - print references	EMG E-1 Step 27 Background Document
NRC KA Topic	2.4.18 Knowledge of the specific bases for EOP's.
NRC KA topic importance factors	2.7/3.6
NRC 1122 KA - 10CFR55 43 tie	N/A
NRC difficulty rating	Not Available
WCGS difficulty rating and explanation	K3 - Lower order question. The candidate must recall the bases for the 375°F RCS temperature from memory.
Distracter explanation and references	A. Incorrect - Adequate core cooling is determined by subcooling, PZR level, heat sink, and RCS pressure stable or increasing. Plausible distracter due to the accumulators being ECCS equipment. B. Incorrect - The criteria for ensuring RCS subcooling is based on stopping of a SI pump or CCP. This temperature setpoint is 360°F. If temperature is below 360°F then RCS subcooling can be maintained by RHR pump head. This is a plausible distractor because of the similarity of temperature setpoints. C. Correct. If RCS pressure remains greater than the accumulator pressure, after injection, then nitrogen will not be introduced into the RCS. D. Incorrect - Reactor vessel head venting is usually performed for hydrogen removal due to fuel cladding reaction. Plant engineering is consulted to help determine if venting is required. Plausible distracter due to gas accumulation in the RCS possibly requiring venting.
NRC ES-401 Tier and section location	SRO: Tier1 Group 1 RO: Tier 1 Group 2
Question original source	Modified Bank
Additional comments	NRC Comment - "B" could be argued as correct with certain interpretations Answer - Revise distractor "B" to be incorrect.

Question 004

EMG E-1, Loss of Reactor or Secondary Coolant, Step 27 directs actions to isolate the SI accumulators if at least two hot legs temperatures are less than 375°F.

The bases for this temperature ensures:

A. conditions have been established which indicate full ECCS flow is no longer required.

B. that RCS subcooling will be maintained after the accumulators are isolated.

C. saturation pressure of the RCS exceeds the accumulator pressure after the accumulator water has been discharged to preclude nitrogen injection into the RCS.

D. that the injected accumulator nitrogen has expanded sufficiently to warrant a determination of whether the reactor vessel head should be vented.

Question Number	005
Question	The plant has experienced a LOCA outside of containment. Operators are performing EMG C-12, "LOCA Outside Containment". Which one of the following indications is checked to see if the break has been isolated? A. ECCS pump room temperatures decreasing B. Auxiliary building sump level alarms clearing C. Proper CVCS valve alignment verified D. RCS pressure increasing
Answer	D
Allowed references	None
LP and objective	LO1732333, Rev. 8
WCGS procedure - print references	EMG C-12, Step 8
NRC KA Topic	W/E04 EK1.3 Knowledge of the operational implications of the following concepts as they apply to the (LOCA Outside Containment): Annunciators and conditions indicating signals, and remedial actions associated with the (LOCA Outside Containment).
NRC KA topic importance factors	3.5/3.9
NRC 1122 KA - 10CFR55 41/43 tie	41.8/41.10/45.3
NRC difficulty rating	Not Available
WCGS difficulty rating and explanation	K2 - Lower order question. The student must recall the procedure requirement for the indication that the leak is isolated.
Distracter explanation and references	A. Incorrect - The leak may not have effected pump room temperatures. Plausible distracter because if the leak was in a pump room, decreasing temperatures could indicated isolation. B. Incorrect - Sump level could be clearing due to sump pump action. Water entering the sump may not be from the leak. Plausible distracter because it might be an indication of a leak be isolated. C. Incorrect - EMG C-12 has the operator verify this alignment. This alone does not indicate the leak is isolated. Plausible distracter because it is an action directed by the procedure. D. Correct - EMG C-12, Step 8 uses this criteria to check if the break is isolated.
NRC ES-401 Tier and section location	SRO: Tier 1 Group 1 RO: Tier 1 Group 2
Question original source	Bank
Additional comments	

Question 005

The plant has experienced a LOCA outside of containment. Operators are performing EMG C-12, "LOCA Outside Containment".

Which one of the following indications is checked to see if the break has been isolated?

A. ECCS pump room temperatures decreasing

B. Auxiliary building sump level alarms clearing

C. Proper CVCS valve alignment verified

D. RCS pressure increasing

Question Number	006
Question	The plant has experienced a safety injection due to an RCS leak in containment. Plant conditions have been established that meet the SI termination criteria of E-1, "Loss of Reactor or Secondary Coolant." Which one of the following statements is true regarding these plant conditions? A. All safety related equipment is operable as required by Technical Specifications. B. Some reactor core decay heat is being removed by the steam generators. C. Containment pressure is below the safety injection actuation setpoint. D. Steam Generator pressures are approximately equal to RCS pressure.
Answer	B
Allowed references	None
LP and objective	LO1732320, Rev. 9
WCGS procedure - print references	EMG E-1, Step 10, BD EMG E-1, Step 10
NRC KA Topic	W/E02 EK2.2 Knowledge of the interrelations between the (SI Termination) and the following: Facility's heat removal systems, including primary coolant, emergency coolant, the decay heat removal systems, and relations between the proper operation of these systems to the operation of the facility.
NRC KA topic importance factors	3.5/3.9
NRC 1122 KA - 10CFR55 41/43 tie	41.7/45.7
NRC difficulty rating	Not Available
WCGS difficulty rating and explanation	A3 - The student must recall a knowledge item in the SI termination criteria. Plant conditions listed are then analyzed versus the SI termination criteria to determine which statement is true.
Distracter explanation and references	A. Incorrect - Failure of safety related equipment could have occurred during the event or maintenance could be in progress on the equipment prior to the event. Plausible distracter because plants try to maintain both trains operable. B. Correct - If subcooling criteria is met then the S/Gs are removing some portion of the decay heat. C. Incorrect - P4 signal prevents auto reactivation of SI so containment pressure has no effect and is not a criteria checked. Plausible distracter because containment pressure can generate a safety injection. D. Incorrect - Subcooling would not be maintained if pressures were equal. Plausible distracter because subcooling is a criteria for SI termination.
NRC ES-401 Tier and section location	SRO: Tier 1 Group 1 RO: Tier 1 Group 2
Question original source	Bank
Additional comments	

Question 006

The plant has experienced a safety injection due to an RCS leak in containment. Plant conditions have been established that meet the SI termination criteria of E-1, "Loss of Reactor or Secondary Coolant."

Which one of the following statements is true regarding these plant conditions?

A. All safety related equipment is operable as required by Technical Specifications.

B. Some reactor core decay heat is being removed by the steam generators.

C. Containment pressure is below the safety injection actuation setpoint.

D. Steam Generator pressures are approximately equal to RCS pressure.

Question Number	007
Question	Wolfcreek is operating at 30% power and it is necessary to secure the 'B' Reactor Coolant Pump due to high vibration. After the RCP is tripped, the 'B' Loop ΔT _____ and the other Loop ΔT's _____. (Assume unit load is held constant.) A. Increases; Decrease B. Increases; Increase C. Decreases; Decrease D. Decreases; Increase
Answer	D
Allowed references	None
LP and objective	SY1300300, Rev. 006, Obj. 8
WCGS procedure - print references	N/A
NRC KA Topic	015/017 AK1.05 Knowledge of the operational implications of the following concepts as they apply to reactor coolant pump malfunctions (loss of RC flow): effects of unbalanced RCS flow on in-core average temperature, core imbalance, and quadrant power tilt.
NRC KA topic importance factors	2.7/3.3
NRC 1122 KA - 10CFR55 41/43 tie	41.8/41.10/45.3
NRC difficulty rating	Not Available
WCGS difficulty rating and explanation	A2 - Higher order question. The student must analyze the affect of the loss of flow on each loops Thot and Tcold readings. Then the student can determine the affect on ΔT.
Distracter explanation and references	A. Incorrect - The affect loop Thot goes to Tcold due to reverse flow so ΔT decreases making the increases part wrong. The running loops ΔT increases due to the increase in steam flow from the non-affect steam generators so decrease is wrong. B. Incorrect - The affect loop Thot goes to Tcold due to reverse flow so ΔT decreases making the increases part wrong. The running loops ΔT increases due to the increase in steam flow from the non-affect steam generators. C. Incorrect - The affected loop ΔT decreasing is correct. The running loops ΔT increases due to the increase in steam flow from the non-affect steam generators so decrease is wrong. D. Correct - On a single loop loss of flow, Thot will decrease to the Tcold temperature in the affected loop. The affected loop ΔT will decrease. This partly due to reverse flow. Tcold in the remaining loops will decrease and Thot will increase to make up for the loss of one loop. This increases these loops ΔT.
NRC ES-401 Tier and section location	SRO: Tier 1 Group 1 RO: Tier 1 Group 1

Question original source	Bank
Additional comments	

Question 007

Wolfcreek is operating at 30% power and it is necessary to secure the 'B' Reactor Coolant Pump due to high vibration. After the RCP is tripped, the 'B' Loop ΔT _____ and the other Loop ΔT's _____. (Assume unit load is held constant.)

A. Increases; Decrease

B. Increases; Increase

C. Decreases; Decrease

D. Decreases; Increase

Question number	008
Question	The plant was operating at full power when offsite power was lost, all equipment operated as required and no SI occurred. Power will be restored in 12 hours. Plant staff determines a cooldown is required, the crew should conduct a natural circulation cooldown using EMG ES-04, "Natural Circulation Cooldown" at: A. < 100 °F per hour and maintain 125 °F subcooling. B. < 50°F per hour and maintain 125 °F subcooling. C. < 100°F per hour and maintain 75 °F subcooling. D. < 50°F per hour and maintain 75 °F subcooling.
Answer	B
Allowed References	None
LP and Objective	LO 17 323 17 Rev 006 Objective - 4
LP reference section	Section III.A.3.b
WCGS procedure print references	EMG ES-04 foldout page and step 8
NRC KA topic	000E09EA 1.3 Ability to operate and/or monitor the following as they apply to the (Natural Circulation Operations): Desired operating results during abnormal and emergency situations.
NRC KA topic importance factors	3.5/3.8
NRC 1122 KA 10CRF 41/43 tie	41.7/45.5/45.6
NRC difficulty rating	Not Available
WCGS difficulty rating and explanation	A-4 Higher order question. The student must identify the limitations of plant equipment available along with understanding the rules of the procedure before selecting the correct conditions. Difficulty level is increased to four because first the student must determine the plant conditions that exist after the loss of offsite power, recognize that a loss of power exists for two CRDM fans, and apply the procedure rules to the setting. The plausible distracters, which are based on allowed cooldown rates in other procedures, increase the difficulty.
Distracter explanation and references	A. Incorrect. <100°F/Hr is the cooldown rate for ES-06, 125°F subcooling is correct if all CRDM fans are not running. B. Correct. EMG ES-04 fold out page and step 8, <50°F cooldown rate is directed by the procedure, 125°F subcooling is required if all CRDM fans are not running. C. Incorrect. EMG ES-04 fold out page and step 8. <100°F/Hr is the cooldown rate for ES-06, 75°F is the subcooling if all CRDM fans are running. D. Incorrect. EMG ES-04 fold out page. <50°F cooldown rate is directed by the procedure, 75°F is the subcooling if all CRDM fans are running.
NRC ES-401 Tier and section location	RO: Tier 1 Group 1 SRO: Tier 1 Group 1
Question original source	Wolf Creek Feb. 98 NRC Exam
Additional comments	

Question 008.

The plant was operating at full power when offsite power was lost, all equipment operated as required and no SI occurred.

Power will be restored in 12 hours.

Plant staff determines a cooldown is required, the crew should conduct a natural circulation cooldown using EMG ES-04, "Natural Circulation Cooldown" at:

A. < 100 °F per hour and maintain 125 °F subcooling.

B. < 50°F per hour and maintain 125 °F subcooling.

C. < 100°F per hour and maintain 75 °F subcooling.

D. < 50°F per hour and maintain 75 °F subcooling.

Question Number	009
Question	Initial plant conditions are as follows: • Reactor shutdown • RCS boron concentration = 800 ppm • Rods are fully inserted It is necessary to add 750 pcm of negative reactivity to achieve the desired shutdown margin. Boric Acid Storage Tank Concentration = 7500 ppm Boron worth = -7.5 pcm/ppm Boration = 10 gallons/ppm Rod Worth = 5 pcm/step How long will it take to achieve the desired SDM at the minimum emergency boration flow rate? A. 11.1 minutes B. 33.3 minutes C. 50.0 minutes D. 66.6 minutes
Answer	B
Allowed references	None
LP and objective	SY1300400, Rev. 009, Obj. 7 & 17, GFES Chapter 4
WCGS procedure - print references	N/A
NRC KA Topic	024 AA2.05 Ability to determine and interpret the following as they apply to the emergency boration: amount of boron to add to achieve required SDM.
NRC KA topic importance factors	3.3/3.9
NRC 1122 KA - 10CFR55 41/43 tie	43.5/45.13
NRC difficulty rating	Not Available
WCGS difficulty rating and explanation	A3 - The student must perform the calculation to determine how many gallons of boric acid is required and then have a knowledge of what the minimum emergency boration flow rate is to complete the calculation.
Distracter explanation and references	A. Incorrect - This incorrect answer could be derived if the minimum flow required for emergency boration from the RWST (90gpm) was used in the calculation. B. Correct - The calculation shows that 100 ppm of boric acid must be added. This is 1000 gallons of boric acid. The minimum emergency boration flowrate is 30 gpm. This would calculate to 33.3 minutes to achieve shutdown margin

	C. Incorrect - This is the result if the candidate used 5 pcm/step vice the 7.5pcm/ppm. D. Incorrect - This is the result if the candidate uses 15 gpm as the minimum boration flowrate. This is plausible in that this is a 15 minute Tech Spec and they may confuse the time frame and the flowrate.
NRC ES-401 Tier and section location	SRO: Tier 1 Group 1 RO: Tier 1 Group 1
Question original source	Mod Bank
Additional comments	NRC comment - Choice A too near the correct answer. C & D too similar. Answer - Changed C to A and inserted new numbers for C & D.

Question 009

Initial plant conditions are as follows:

- Reactor shutdown
- RCS boron concentration = 800 ppm
- Rods are fully inserted

It is necessary to add 750 pcm of negative reactivity to achieve the desired shutdown margin.

Boric Acid Storage Tank Concentration = 7500 ppm
Boron worth = -7.5 pcm/ppm
Boration = 10 gallons/ppm
Rod Worth = 5 pcm/step

How long will it take to achieve the desired SDM at the minimum emergency boration flow rate?

A. 11.1 minutes

B. 33.3 minutes

C. 50.0 minutes

D. 66.6 minutes

Question Number	010
Question	Wolf Creek is at 100% Power. The actuator for EG HV-53 Train "A" Service Loop Supply valve is undergoing maintenance. The EG HV-53 valve is tagged and closed. A Technician inadvertently disables the Train "B" Service Loop Supply valve EG HV-54 resulting in closure of the valve which can not be immediately restored. Which of the following tasks must be performed per OFN EG-004, "CCW System Malfunctions," to mitigate this consequence? A. Trip the Normal Charging Pump. B. Ensure steam dump control is in TAVG mode and C-7 is reset. C. Ensure both CCW pumps running in each train. D. Decrease charging to minimum and charge to Reactor Coolant Pump seals only.
Answer	D. Decrease charging to minimum and charge to Reactor Coolant Pump seals only.
Allowed references	None
LP and objective	SY1400800, Rev. 008, Obj. 6
WCGS procedure - print references	OFN EG-004, Rev.3
NRC KA Topic	026 AA1.06 Ability to operate and/or monitor the following as they apply to the loss of component cooling water: control of flow rates to components cooled by the CCWS.
NRC KA topic importance factors	2.9/2.9
NRC 1122 KA - 10CFR55 41/43 tie	41.7/45.5/45.6
NRC difficulty rating	Not Available
WCGS difficulty rating and explanation	K2 - Lower order question. The student must recognize that the Service Loop is isolated completely and then remember the requirements of OFN EG-004.
Distracter explanation and references	A. Incorrect - OFN EG-004, Step 2 RNO, ensures the NCP or CCP is running. Plausible distracter, it could be selected based on ensuring the CCP running. B. Incorrect - OFN EG-004,STEP 2 RNO, places the steam dumps in steam pressure mode due to the trip of the RCPs. Plausible distracter, it could be selected since the steam dumps are normally in the Tavg mode. C. Incorrect - OFN EG-004, Step 1, checks only one pump running in each train. Plausible distracter, it could be selected as correct because it addresses both trains. However this will not mitigate the loss of service water loop that the stem specifies as the isolation valves are closed.. D. Correct - OFN EG-004, Step 2 RNO, requires the operator to reduce charging and charge only to the seals.
NRC ES-401 Tier and section location	SRO: Tier 1 Group 1 RO: Tier 1 Group 1
Question original source	Mod Bank
Additional comments	NRC comment - Need specific data. Answer - Added data in the stem.

Question: 010

Wolf Creek is at 100% Power. The actuator for EG HV-53 Train "A" Service Loop Supply valve is undergoing maintenance. The EG HV-53 valve is tagged and closed. A Technician inadvertently disables the Train "B" Service Loop Supply valve EG HV-54 resulting in closure of the valve which can not be immediately restored.

Which of the following tasks must be performed per OFN EG-004, "CCW System Malfunctions," to mitigate this consequence?

A. Trip the Normal Charging Pump.

B. Ensure steam dump control is in TAVG mode and C-7 is reset.

C. Ensure both CCW pumps running in each train.

D. Decrease charging to minimum and charge to Reactor Coolant Pump seals only.

Question Number	011
Question	The crew has initiated emergency boration in response to an ATWS. The Reactor is Middle of Life (MOL) and RCS pressure is 2335 psig. Which of the following actions would maximize negative reactivity and minimize the addition of positive reactivity being added to the RCS? A. Raise AFW flow to 700 gpm and fill all steam generators to 5% narrow range level B. Lower charging flows to 40 gpm and raise letdown flow to 120 gpm by placing two letdown orifices in service. C. Open Pressurizer PORV motor isolation valve and open a Pressurizer PORV. D. Place Steam Dump Controller to Manual and open the steam dumps
Answer	C. Verify Pressurizer PORV motor isolation valve open and open a Pressurizer PORV.
Allowed references	None
LP and objective	LO 1732339
WCGS procedure - print references	BD-EMG FR-S1 Response to Nuclear Power Generation/ATWT Background Document
NRC KA Topic	029 EK1.05 Knowledge of the operational implications of the following concepts as they apply to the ATWS: definition of negative temperature coefficient as applied to large PWR coolant systems.
NRC KA topic importance factors	2.8/3.2
NRC 1122 KA - 10CFR55 41/43 tie	41.8/41.10/45.3
NRC difficulty rating	Not Available
WCGS difficulty rating and explanation	A3- The student must know that at this time in core life the Moderator Temperature Coefficient is negative(Wolf Creek has a positive MTC early in core life) . He then must analyze the various effects to determine which of them will add the greatest negative reactivity to the core.
Distracter explanation and references	A. Incorrect - Aux Feedwater flow is needed for a loss of feedwater event and for removal of decay heat. It would tend to add positive reactivity due to the colder water being injected into the Steam Generators vice negative reactivity. Credible in that this is a required action within the Functional Recovery Procedure. B. Incorrect: By reducing the flowrate the operator has reduced the amount of boron injected into the core thereby reducing the negative reactivity insertion rate. Credible in that by adjusting the addition and removal rates it may appear that you would be adjusting concentration vice inventory levels. C. Correct: By reducing RCS Pressure the injection flowrate will increase therefore increasing the negative reactivity insertion. D. Incorrect: Opening Steam Dumps will cooldown the core and insert positive reactivity. Credible in that this is an action normally taken to

	stabilize the core after a trip.
NRC ES-401 Tier and section location	SRO: Tier 1 Group 1 RO: Tier 1 Group 2
Question original source	Beaver Valley 99
Additional comments	NRC comment - Does not discriminate well. Not relevant to operational performance. Answer - Replaced with new question. NRC comment: Removed verify from answer "C" as it made the answer stand out.

Question: 011

The crew has initiated emergency boration in response to an ATWS. The Reactor is Middle of Life (MOL) and RCS pressure is 2335 psig.

Which of the following actions would maximize negative reactivity and minimize the addition of positive reactivity being added to the RCS?

A. Raise AFW flow to 700 gpm and fill all steam generators to 5% narrow range level

B. Lower charging flows to 40 gpm and raise letdown flow to 120 gpm by placing two letdown orifices in service.

C. Open Pressurizer PORV motor isolation valve and open a Pressurizer PORV.

D. Place Steam Dump Controller to Manual and open the steam dumps

Question Number	012
Question	A normal plant shutdown is in progress with the following conditions: • Pressurizer Pressure is 2000 psig • Steam line pressure is 800 psig • All other conditions are normal for this point in a plant shutdown. At this point a large steamline rupture occurs upstream of the MSIV resulting in the complete depressurization of the affected steam generator in 1 minute. Which one of the following describes an expected response of the ESFAS to these events? A. MSLIS only due to high rate of steamline pressure decrease. B. SI and MSLIS due to high rate of steamline pressure decrease. C. SI only due to low steam line pressure. D. SI and MSLIS due to low steam line pressure.
Answer	D. SI and MSLIS due to low steam line pressure.
Allowed references	None
LP and objective	SY1301301, Rev. 000, Obj. 3
WCGS procedure - print references	N/A
NRC KA Topic	040 AK2.01 Knowledge of the interrelations between the steam line rupture and the following: valves.
NRC KA topic importance factors	2.6/2.5
NRC 1122 KA - 10CFR55 41/43 tie	41.7/45.7
NRC difficulty rating	Not Available
WCGS difficulty rating and explanation	A3 - Higher order question. The student must understand the normal plant conditions and realize that P-11 is not blocked at this point. Then the student must analyze the affect of the large steamline rupture on all setpoints that can generate a MSLI or SI to determine the answer.
Distracter explanation and references	A. Incorrect - The steam line rate trip is only active if P-11 has been blocked. This answer could be selected if the student did not realize this circuit is not activated until 1970 psig. B. Incorrect - The steam line rate trip is only active if P-11 has been blocked. This answer could be selected if the student did not realize this circuit is not activated until 1970 psig. The SI signal is not activated by the steam line negative rate circuit. This answer could be selected because the MSLI is activated by the negative rate circuit. C. Incorrect - SI could be activated due to low steamline pressure but MSLI would also be activated. This answer could be selected if the student does not realize the MSLI is at the same setpoint. D. Correct - SI and MSLI are both generated when steamline pressure is < 615 psig on 2/3 pressure transmitters on 1/4 steamlines.
NRC ES-401 Tier and	SRO: Tier 1 Group 1

section location	RO: Tier 1 Group 1
Question original source	Bank
Additional comments	NRC Comment - Does P-11 have to be manually blocked at ≤ 1970 psig. Answer - Yes a manual block is required. No change to the question.

Question: 012

A normal plant shutdown is in progress with the following conditions:

- Pressurizer Pressure is 2000 psig
- Steam line pressure is 800 psig
- All other conditions are normal for this point in a plant shutdown.

At this point a large steamline rupture occurs upstream of the MSIV resulting in the complete depressurization of the affected steam generator in 1 minute.

Which one of the following describes an expected response of the ESFAS to these events?

A. MSLIS only due to high rate of steamline pressure decrease.

B. SI and MSLIS due to high rate of steamline pressure decrease.

C. SI only due to low steam line pressure.

D. SI and MSLIS due to low steam line pressure.

Question Number	013
Question	Which one of the following describes the normal status of the Main Turbine Steam Valves during Control Valve Chest Warming? A. Main Stop Valve #2 Bypass is Open B. All Intermediate Stop Valves are Shut C. Control Valves #1, #2, and #3 are Open D. All Main Stop Valves are Open
Answer	A
Allowed references	None
LP and objective	SY1504600, Rev. 003, Obj. 9 & SY1504800, Rev. 002, Obj. 2
WCGS procedure - print references	N/A
NRC KA Topic	040 AA1.06 Ability to operate and/or monitor the following as the apply to the steam line rupture: S/G and steam line pressures and flows.
NRC KA topic importance factors	4.0/4.1
NRC 1122 KA - 10CFR55 41/43 tie	41.7/45.5/45.6
NRC difficulty rating	Not Available
WCGS difficulty rating and explanation	K2 - Lower order question. The student must recall the turbine valve positions during chest warming.
Distracter explanation and references	A. Correct - When chest is selected the stop valves and control valves remain closed. Steam is admitted through the number 2 stop valve bypass valve. The intermediate stop valves will fully open upon resetting of the emergency trip system and remain fully open for all normal operation. B. Incorrect - . The intermediate stop valves will fully open upon resetting of the emergency trip system and remain fully open for all normal operation. This answer could be selected because they were confused with the main stop valves which are shut C. Incorrect - Control valves are shut in chest mode. This answer could be selected because they are open in the shell mode. D. Incorrect - Main stop valves are closed in the chest mode. This answer could be selected if confused with the control valves that open in the shell mode.
NRC ES-401 Tier and section location	SRO: Tier 1 Group 1 RO: Tier 1 Group 1
Question original source	Exam Bank
Additional comments	

Question 013

Which one of the following describes the normal status of the Main Turbine Steam Valves during Control Valve Chest Warming?

A. Main Stop Valve #2 Bypass is Open

B. All Intermediate Stop Valves are Shut

C. Control Valves #1, #2, and #3 are Open

D. All Main Stop Valves are Open

Question Number	014
Question	The unit is at 75% power when a trip and SI occurs. Forty minutes after the trip the following conditions are indicated: • All S/G levels - 40% NR • Containment Pressure - 4 psig • RCS subcooling - 0°F • Power Range NIs - 0% • Source Range Startup Rate - -0.1 dpm • CETs - 225°F • RVLIS - Natural Circulation Range 50% • Cold Leg Temperature - 175°F Which one of the following critical safety function paths is in effect? A. Transition to FR-S1, Response to Nuclear Power Generation/ATWT B. Transition to FR-C1, Response to Inadequate Core Cooling C. Transition to FR-H1, Response to Loss of Secondary Heat Sink D. Transition to FR-P1, Response to Imminent Pressurized Thermal Shock Condition
Answer	D. Transition to FR-P1, Response to Imminent Pressurized Thermal Shock Condition
Allowed references	None
LP and objective	LO1732312, Rev. 2
WCGS procedure - print references	EMG F-0 CSFST
NRC KA Topic	W/E08 EA2.2 Ability to determine and interpret the following as they apply to the (Pressurized Thermal Shock): adherence to appropriate procedures and operation within the limitations in the facility's license and amendments.
NRC KA topic importance factors	3.5/4.1
NRC 1122 KA - 10CFR55 41/43 tie	43.5/45.13
NRC difficulty rating	Not Available
WCGS difficulty rating and explanation	A4 - Higher order question. The student must analyze the given conditions and then apply these conditions to his knowledge of the status trees. Difficulty level three is given because the student must recall multiple status tree requirements and apply the multiple conditions to each status tree path to determine the answer.
Distracter explanation and references	A. Incorrect - Transition to FR-S.1 is made if PR is equal to or greater than 5% or IR startup rate is not zero or negative. These conditions are not met. This answer could be selected if the student doesn't know these parameters. B. Incorrect - Transition to FR-C.1 is made if core exits are 1200°F or 712°F with natural circulation range RVLIS < 45%. These conditions

	are not met. The answer could be selected if the student doesn't know these parameters. C. Incorrect - Transition to FR-H.1 is made if S/G NR level is 6% or less in all S/Gs and total feed flow is 260,000 lbm/hr or less. These conditions are not met. The answer could be selected if the student doesn't know these parameters. D. Correct - Transition the FR-P.1 is made on a CL temperature decrease of 100°F or more in the last hour with 175°F being to the left of the Limit A curve for all pressures. These conditions are met.
NRC ES-401 Tier and section location	SRO: Tier 1 Group 1 RO: Tier 1 Group 1
Question original source	Exam Bank
Additional comments	NRC Comment - Is there a FR for excessive cooldown? Answer - FR-P1 "Response to Imminent Pressurized Thermal Shock, addresses excessive cooldown. There is not a specific FR for excessive cooldown. No change to question is required.

Question 014

The unit is at 75% power when a trip and SI occurs. Forty minutes after the trip the following conditions are indicated:

- All S/G levels - 40% NR
- Containment Pressure - 4 psig
- RCS subcooling - 0°F
- Power Range NIs - 0%
- Source Range Startup Rate - -0.1 dpm
- CETs - 225°F
- RVLIS - Natural Circulation Range 50%
- Cold Leg Temperature - 175°F

Which one of the following critical safety function paths is in effect?

A. Transition to FR-S1, Response to Nuclear Power Generation/ATWT

B. Transition to FR-C1, Response to Inadequate Core Cooling

C. Transition to FR-H1, Response to Loss of Secondary Heat Sink

D. Transition to FR-P1, Response to Imminent Pressurized Thermal Shock Condition

Question Number	015
Question	The Operators are responding to a Loss of Condenser Vacuum in accordance with ALR 00-116B "COND A VAC LO". The following are current plant conditions: Reactor Power is 29%. Generator load is 29%. Main Condenser Vacuum is 4.5 HgA and rising. Two Circulating Water Pumps are in operation. Which of the following actions should be taken? A. Start an additional Circulating Water Pump. B. Start all available Condenser Air Removal Pumps. C. Have an operator ensure vacuum breakers water seal is full. D. Trip the Turbine.
Answer	D. Trip the Turbine.
Allowed references	None
LP and objective	LO1732435, Rev. 6
WCGS procedure - print references	ALR 00116B, 117B, 118B, GEN 00-004, 4.21, SYS AC-120, 4.15
NRC KA Topic	2.4.11 Knowledge of abnormal condition procedures
NRC KA topic importance factors	3.4/3.6
NRC 1122 KA - 10CFR55 41/43 tie	41.10/43.5/45.13
NRC difficulty rating	Not Available
WCGS difficulty rating and explanation	K3 - Lower order question. The candidate must recall the backpressure limitations associated with turbine operation. This is rated a difficulty level three because of the complexity of the information that must be recalled.
Distracter explanation and references	A. Incorrect - The ALR requires that the turbine be tripped if turbine power is 30% or less. Plausible distracter due to the starting of additional circulating water pumps being an option if turbine power is > 30%. B. Incorrect - The ALR requires that the turbine be tripped if turbine power is 30% or less. Plausible distracter due to the starting of additional circulating water pumps being an option if turbine power is > 30%. C. Incorrect - The ALR requires that the turbine be tripped if turbine

	power is 30% or less. Plausible distracter due to the starting of additional circulating water pumps being an option if turbine power is > 30%. D. Correct - The ALR requires that the turbine be tripped if turbine power is 30% or less.
NRC ES-401 Tier and section location	SRO: Tier 1 Group 1 RO: Tier 1 Group 1
Question original source	Exam Bank
Additional comments	NRC comment - Link stem to ALR. Answer - Revised stem to include ALR in effect.

Question: 015

The Operators are responding to a Loss of Condenser Vacuum in accordance with ALR 00-116B "COND A VAC LO". The following are current plant conditions:

- Reactor Power is 29%.
- Generator load is 29%.
- Main Condenser Vacuum is 4.5 HgA and rising.
- Two Circulating Water Pumps are in operation.

Which of the following actions should be taken?

A. Start an additional Circulating Water Pump.

B. Start all available Condenser Air Removal Pumps.

C. Have an operator ensure vacuum breakers water seal is full.

D. Trip the Turbine.

Question Number	016
Question	The crew is performing EMG C-0, Loss of All AC Power. The reactor operator reports that the NK11 battery is discharging normally. Which one of the following is the minimum time that NK01 could be expected to be available assuming the battery was within it's surveillance criteria? A. 2 hours B. 4 hours C. 6 hours D. 8 hours
Answer	B
Allowed references	None
LP and objective	SY1506300, Rev. 006, Obj. 2
WCGS procedure - print references	C-0, Attachment C
NRC KA Topic	055 EK3.01 Knowledge of the reasons for the following responses as they apply to the station blackout: length of time for which battery capacity is designed.
NRC KA topic importance factors	2.7/3.4
NRC 1122 KA - 10CFR55 41/43 tie	41.5/41.10/45.6/45.13
NRC difficulty rating	Not Available
WCGS difficulty rating and explanation	K2 - Lower order question. The student must recall the knowledge item that the class 1E battery is designed to last a minimum of 4 hours.
Distracter explanation and references	A. Incorrect - Each battery is designed to supply emergency loads for 240 minutes following a loss of all A. C. Power. This answer could be selected because 120 minutes is the design capacity of the non-class 1E PK batteries. B. Correct - Each battery is designed to supply emergency loads for 240 minutes following a loss of all A. C. Power. C. Incorrect - Each battery is designed to supply emergency loads for 240 minutes following a loss of all A. C. Power. This answer could be selected because Technical Specification 3.8.2. requires the unit to be in Hot Standby within six hours if a battery is not returned to operability within the two hour time limit. D. Incorrect - Each battery is designed to supply emergency loads for 240 minutes following a loss of all A. C. Power. This answer could be selected because Technical Specification 3.8.2.1 requires a battery be restored to operable in two hours or be in Hot Standby within the next six hours.
NRC ES-401 Tier and section location	SRO: Tier 1 Group 1 RO: Tier 1 Group 1
Question original source	NEW
Additional comments	

Question 016

The crew is performing EMG C-0, Loss of All AC Power. The reactor operator reports that the NK11 battery is discharging normally.

Which one of the following is the minimum time that NK01 could be expected to be available assuming the battery was within it's surveillance criteria?

A. 2 hours

B. 4 hours

C. 6 hours

D. 8 hours

Question Number	017
Question	A loss of all AC power has occurred and the operators are conducting EMG C-0, Loss of All AC Power. The operators are preparing to depressurize the Steam Generators IAW Step 28 of EMG C-0 when power is restored to both Vital Busses. Which one of the following pumps can be expected to start without operator action? A. Charging B. Safety Injection C. Component Cooling Water D. Essential Service Water
Answer	D. Essential Service Water
Allowed references	None
LP and objective	SY1408900, Rev. 006, Obj. 6
WCGS procedure - print references	C-0, Note prior to step 13
NRC KA Topic	062 AK3.02 Knowledge of the reasons for the following responses as they apply to the loss of nuclear service water: the automatic actions (alignments) within the nuclear service water resulting from the actuation of the ESFAS.
NRC KA topic importance factors	3.6/3.9
NRC 1122 KA - 10CFR55 41/43 tie	41.4/41.8/45.7
NRC difficulty rating	Not Available
WCGS difficulty rating and explanation	A2 - Higher order question. The student must recall the steps performed in C-0 and determine how these configured the individual components. Based on this information, the candidate must analyze how the restoration of power will affect each of the listed components..
Distracter explanation and references	A. Incorrect - CCPs are placed in pull to lock in C-0, Step13. This answer could be selected because CCPs are the first thing loaded on the bus when the D/G powers up a safeguard bus normally. B. Incorrect - Safety injection pumps are placed in pull to lock in C-0, Step13. This answer could be selected because the safety injection pumps are automatically loaded on the safeguards bus during an accident.

	C. Incorrect - CCW pumps are placed in pull to lock in C-0, Step13. This answer could be selected because the CCW pumps are automatically loaded on the safeguards bus during a loss of offsite power or a SI. D. Correct - ESW pumps are not placed in pull to lock in C-0. The note prior to step 13 states that an ESW pump shall be allowed to automatically load on the safeguard busses for D/G cooling. The sequencer loads them on the bus during a loss of offsite power or SI.
NRC ES-401 Tier and section location	SRO: Tier 1 Group 1 RO: Tier 1 Group 1
Question original source	Exam Bank
Additional comments	NRC comment - Clarify location in procedure and meaning of "AC restored". Answer - Added step in effect and what power source had been restored.

Question: 017

A loss of all AC power has occurred and the operators are conducting EMG C-0, Loss of All AC Power.

The operators are preparing to depressurize the Steam Generators IAW Step 28 of EMG C-0 when power is restored to both Vital Busses.

Which one of the following pumps can be expected to start without operator action?

A. Charging

B. Safety Injection

C. Component Cooling Water

D. Essential Service Water

Question Number	018
Question	A spark has ignited some hydrogen gas produced by the NK14 battery and a fire is in progress. No personnel are in the vicinity. Panel KC-008 is in alarm. The first attempt to automatically extinguish the fire failed. Which one of the following describes the next action to extinguish the fire? A. The fire brigade actuates a manual water spray system. B. An extended discharge bank of Halon 1301 releases. C. An automatic pre-action sprinkler system initiates. D. A foam system is released from KC-008.
Answer	B
Allowed references	None
LP and objective	SY1408600 / 2
WCGS procedure - print references	M-12KC07
NRC KA Topic	067 AK1.02 Knowledge of the operational implications of the following concepts as they apply to plant fire on site: fire fighting
NRC KA topic importance factors	3.1/3.9
NRC 1122 KA - 10CFR55 41/43 tie	41.8/41.10/45.3
NRC difficulty rating	Not Available
WCGS difficulty rating and explanation	A2 - Lower order question. The student using the knowledge of what type of fire each fire fighting equipment is used for, select which type is available for the given area.
Distracter explanation and references	A. Incorrect - There is no manual water spray system available for the area. B. Correct - By design, the area is protected by an extended discharge system. C. Incorrect - No automatic pre-action sprinkler system in the area. D. Incorrect - Only one foam system on site and it is not actuated from KC-008.
NRC ES-401 Tier and section location	SRO: Tier 1 Group 1 RO: Tier 1 Group 1
Question original source	New
Additional comments	

Question 018

A spark has ignited some hydrogen gas produced by the NK14 battery and a fire is in progress. No personnel are in the vicinity. Panel KC-008 is in alarm. The first attempt to automatically extinguish the fire failed.

Which one of the following describes the next action to extinguish the fire?

A. The fire brigade actuates a manual water spray system.

B. An extended discharge bank of Halon 1301 releases.

C. An automatic pre-action sprinkler system initiates.

D. A foam system is released from KC-008.

Question Number	019
Question	Operators are at the Auxiliary Shutdown Panel (ASP) following an evacuation of the Control Room. RCS temperature was being controlled using RHR in accordance with OFN RP-014 "Hot Standby to Cold Shutdown from Outside the Control Room". The operators are responding to indications of cavitation in the running RHR pump and are attempting to reduce flow. RHR HX Bypass Flow Valve is operated _____(1)_____. RHR HX Outlet Valve is operated _____(2)_____. Total Flow is _____(3)_____ controlled. (1) (2) (3) A. Locally At the ASP Automatically B. Locally Locally Locally C. Automatically Manually Manually D. Automatically Automatically Automatically
Answer	B. Locally Locally Locally
Allowed references	None
LP and objective	SY1300500 Rev. 004, Obj. 2
WCGS procedure - print references	OFN RP-014, Rev. 3
NRC KA Topic	2.4.9 Knowledge of low power/ shutdown implications in accident (e.g. LOCA or loss of RHR) mitigation strategies.
NRC KA topic importance factors	3.3/3.9
NRC 1122 KA - 10CFR55 41/43 tie	41.10/43.5/45.13
NRC difficulty rating	Not Available
WCGS difficulty	K4 - Lower order question. The candidate must remember the control

rating and explanation	circuits and failure positions of the RHR HX outlet and bypass valves. This information must be combined with the method used to operate these valves in OFN RP-014.
Distracter explanation and references	A. Incorrect - There is no control of either valve at the ASP. Signal generators are placed on both valves during OFN RP-014 to enable positioning of the valve. No automatic functions are available. This answer could be selected if the student is not familiar with the RHR system controls or OFN RP-014 methodology. B. Correct - OFN RP-014 provides a signal generator for positioning of these valves. Flow must be manually controlled because no automatic functions are available. C. Incorrect - No automatic functions are available Flow must be manually controlled. This answer could be selected because it is partially correct in that from the control room the bypass valve automatically adjusts to manual adjustments to the flow control valve. D. Incorrect - No automatic functions are available The RHR HX outlet valve design provides for no automatic functions. Flow must be manually controlled. This answer could be selected because it is similar to RHR system normal operation.
NRC ES-401 Tier and section location	SRO: Tier 1 Group 1 RO: Tier 1 Group 1
Question original source	Modified Exam Bank
Additional comments	NRC comment - Too much information in the choices. Move the analysis information to the stem. Answer - Analysis information moved to the stem.

Question: 019

Operators are at the Auxiliary Shutdown Panel (ASP) following an evacuation of the Control Room. RCS temperature was being controlled using RHR in accordance with OFN RP-014 "Hot Standby to Cold Shutdown from Outside the Control Room". The operators are responding to indications of cavitation in the running RHR pump and are attempting to reduce flow.

RHR HX Bypass Flow Valve is operated _____(1)_____.

RHR HX Outlet Valve is operated _____(2)_____.

Total Flow is _____(3)_____ controlled.

	(1)	(2)	(3)
A.	Locally	At the ASP	Automatically
B.	Locally	Locally	Locally
C.	Automatically	Manually	Manually
D.	Automatically	Automatically	Automatically

Question Number	020
Question	The following conditions are present: • Unit tripped from 100% power. • RCS pressure rapidly dropped to below 1000 psig. • SI actuated, and started injecting. • Containment pressure rapidly increased. • Steam Generator pressures and levels remained close to normal post trip values. • Safety injection flow has been inadvertently reduced. • Source Range Nuclear Instrumentation energized, and initially showed a decreasing count rate. • Count rate became erratic appearing to return to criticality. Which one of the following is the reason for the higher than normal Source Range reading? A. Core boiling is occurring, resulting in a decrease in boron concentration in the lower part of the core, increasing fission rate. B. The SI water is cool, increasing the moderating effect and fission count rate over the amount normally expected. C. As the core void fraction approaches 100%, the fission rate increases due to boron displacement from the core. D. Reactor vessel voiding is occurring, allowing more neutrons to leak out of the core.
Answer	D
Allowed references	None
LP and objective	LO1610702 Rev. 003, SY1301501, Rev. 07.
WCGS procedure - print references	N/A
NRC KA Topic	069 EK3.1 Knowledge of the reasons for the following responses as they apply to the (high containment pressure): Facility operating characteristics during transient conditions, including coolant chemistry and the effects of temperature, pressure, and reactivity changes and operating limitations and reasons for these operating characteristics.
NRC KA topic importance factors	3.2/3.6
NRC 1122 KA - 10CFR55 41/43 tie	41.5/41.10/45.6/45.13
NRC difficulty rating	Not Available
WCGS difficulty rating and explanation	A3 - Higher order question. The student must evaluate existing plant conditions and apply the stated different core parameters to determine which one could yield these conditions.
Distracter explanation and references	A. Incorrect - Core boiling causes an increase in boron concentration in the lower part of the core. This would result in a decrease in SR neutrons. This answer could be selected because core boiling could cause increased SR count rate. It would not cause a decrease in boron concentration.

	B. Incorrect - The SI water is not any cooler than normal and has been inadvertently reduced. This would not greatly increase SR flux. This answer could be selected because cooler water does improve moderation, which could increase fission under the right conditions. C. Incorrect - The fission rate does not increase with void fraction increase. This could increase neutron leakage out of the core which would increase SR readings. This answer could be selected because it is partially correct. D. Correct - Significant voiding in the reactor vessel is possible during a large break LOCA. The erratic indication may appear to be a return to criticality even though the reactor core is subcritical.
NRC ES-401 Tier and section location	SRO: Tier 1 Group 1 RO: Tier 1 Group 1
Question original source	Exam Bank
Additional comments	

Question 020

The following conditions are present:

- Unit tripped from 100% power.
- RCS pressure rapidly dropped to below 1000 psig.
- SI actuated, and started injecting.
- Containment pressure rapidly increased.
- Steam Generator pressures and levels remained close to normal post trip values.
- Safety injection flow has been inadvertently reduced.
- Source Range Nuclear Instrumentation energized, and initially showed a decreasing count rate.
- Count rate became erratic appearing to return to criticality.

Which one of the following is the reason for the higher than normal Source Range reading?

A. Core boiling is occurring, resulting in a decrease in boron concentration in the lower part of the core, increasing fission rate.

B. The SI water is cool, increasing the moderating effect and fission count rate over the amount normally expected.

C. As the core void fraction approaches 100%, the fission rate increases due to boron displacement from the core.

D. Reactor vessel voiding is occurring, allowing more neutrons to leak out of the core..

Question Number	021
Question	In response to an Inadequate Core Cooling Condition the operators are preparing to depressurize the S/Gs to atmospheric pressure in accordance with EMG FR-C1, "Response to Inadequate Core Cooling." Prior to commencing this operation, they first secure all RCPs. Which one of the following is described by BD EMG FR-C1 as why it is necessary to first secure the RCPs? A. Minimize inventory loss through any primary break.. B. Remove the additional RCS heat input. C. Avoid RCP run-out due to steam/water mixture. D. Avoid RCP seal failure due to loss of seal D/P.
Answer	D. Avoid RCP seal failure due to loss of seal D/P.
Allowed references	None
LP and objective	SY1300300, Rev.006, Obj.4
WCGS procedure - print references	BD EMG FR-C1, Step 17
NRC KA Topic	074 EK2.01 Knowledge of the interrelations between the and the following inadequate core cooling: RCP.
NRC KA topic importance factors	3.6/3.8
NRC 1122 KA - 10CFR55 41/43 tie	41.7/45.7
NRC difficulty rating	Not Available
WCGS difficulty rating and explanation	K3 - Lower order question. The student must recall the basis for securing the RCPs during the performance of this procedure.
Distracter explanation and references	A. Incorrect - EMG background reason is to avoid seal failure due to loss of ΔP. This answer could be selected due to the fact that RCPs are stopped in other emergency procedures to reduce break inventory loss. B. Incorrect - EMG background reason is to avoid seal failure due to loss of ΔP. This answer could be selected because the RCPs are stopped in other emergency procedures to remove the additional heat input. C. Incorrect - EMG background reason is to avoid seal failure due to loss of ΔP. Plausible distracter because runout can lead to mechanical stress on the pump and excessive motor current. This can be a reason to stop a pump.

	D. Correct - EMG background reason is to avoid seal failure due to loss of ΔP. Differential pressures of less than 200 PSI can cause #1 seal damage.
NRC ES-401 Tier and section location	SRO: Tier 1 Group 1 RO: Tier 1 Group 1
Question original source	Exam Bank
Additional comments	NRC Comment - Link EMG background to the stem. Answer - Added link to BD EMG FR-C1.

Question: 021

In response to an Inadequate Core Cooling Condition, the operators are preparing to depressurize the S/Gs to atmospheric pressure in accordance with EMG FR-C1, "Response to Inadequate Core Cooling."

Prior to commencing this operation, they first secure all RCPs.

Which one of the following is described by BD EMG FR-C1 as why it is necessary to first secure the RCPs?

A. Minimize inventory loss through any primary break.

B. Remove the additional RCS heat input.

C. Avoid RCP run-out due to steam/water mixture.

D. Avoid RCP seal failure due to loss of seal D/P.

Question Number	022
Question	Given the following plant conditions: • Safety Injection - Actuated • PZR Pressure - 1800 psig and slowly decreasing • RCS Temperature - 550°F and slowly decreasing • S/G NR Levels - 1% and slowly increasing • PRT Pressure - 3 psig and stable • S/G Pressure - 1000 psig and stable • PZR level - 38% and increasing • RM-11 - GT RE 59 & 60 CHARMS are alarming • CTMT Temperature - 164°F and slowly increasing • CTMT Pressure - 4 psig • CTMT Humidity - Increasing Which one of the following could be the cause of the above conditions? A. Pressurizer surge line leak. B. Pressurizer PORV failed open. C. RCS leak from a cold leg. D. Pressurizer Steam space leak.
Answer	D. Pressurizer Steam space leak.
Allowed references	Steam Tables
LP and objective	LO1732320, Rev.9, Obj. 3
WCGS procedure - print references	EMG E-0 "Reactor Trip or Safety Injection" BD-EMG E-0 "Background Document"
NRC KA Topic	009 EA2.11 Ability to determine or interpret the following as they apply to a small break LOCA: containment temperature, pressure, and humidity.
NRC KA topic importance factors	3.8/4.1
NRC 1122 KA - 10CFR55 41/43 tie	43.5/45.13
NRC difficulty rating	Not Available
WCGS difficulty rating and explanation	A3 - Higher order question. The student must analyze the existing plant conditions and compare them to what is expected during each of the four failures. From this comparison the student must determine which problem could cause all of the symptoms.
Distracter explanation and references	A. Incorrect - A pressurizer surge line leak with PZR pressure decreasing would also have PZR level decreasing. This answer could be selected due to PZR pressure decreasing, CNMT temperature increasing, GT RE 59 & 60 alarming, and CNMT humidity increasing. B. Incorrect - PRT level does not support a PORV open. This answer could be selected due to the PZR pressure decrease and the PZR level

	increase. C. Incorrect - A RCS cold leg leak with PZR pressure decreasing would also have PZR level decreasing. This answer could be selected due to PZR pressure decreasing, CNMT temperature increasing, GT RE 59 & 60 alarming, and CNMT humidity increasing. D. Correct - The leak is into CNMT as indicated by humidity, radiation, and temperature. It is a steam space leak based on PZR level increasing and PZR pressure decreasing.
NRC ES-401 Tier and section location	SRO: Tier 1 Group 2 RO: Tier 1 Group 2
Question original source	Exam Bank
Additional comments	NRC Comment - Provide steam tables. Answer - Added steam tables to allowed references.

Question: 022

Given the following plant conditions:

- Safety Injection - Actuated
- PZR Pressure - 1800 psig and slowly decreasing
- RCS Temperature - 550°F and slowly decreasing
- S/G NR Levels - 1% and slowly increasing
- PRT Pressure - 3 psig and stable
- S/G Pressure - 1000 psig and stable
- PZR level - 38% and increasing
- RM-11 - GT RE 59 & 60 CHARMS are alarming
- CTMT Temperature - 164°F and slowly increasing
- CTMT Pressure - 4 psig
- CTMT Humidity - Increasing

Which one of the following could be the cause of the above conditions?

A. Steam Generator Safety Valve failed open.

B. Pressurizer PORV failed open.

C. RCS leak from a cold leg.

D. Pressurizer Steam space leak.

Question Number	023
Question	During the performance of EMG ES-11, "Post LOCA Cooldown and Depressurization," what is the basis for having only one RCP running? A. Provides the ΔP required to provide letdown. Additional RCPs would add unnecessary heat load. B. Desired for spray and RCS heat transport to the S/Gs. Additional RCPs would add unnecessary heat load. C. Needed for RCS heat transport to the S/Gs. Additional RCPs could overload the electrical power supply in the post LOCA configuration. D. Desired for spray and RCS mixing. Additional RCPs could overload the electrical power supply in the post LOCA configuration.
Answer	B
Allowed references	None
LP and objective	LO1732321, Rev. 8
WCGS procedure - print references	BD EMG ES-11, Step 18 bases
NRC KA Topic	W/E03 EA2.1 Ability to determine and interpret the following as they apply to the (LOCA Cooldown and Depressurization): Facility conditions and selection of appropriate procedures during abnormal and emergency operations.
NRC KA topic importance factors	3.4/4.2
NRC 1122 KA - 10CFR55 41/43 tie	43.5/45.13
NRC difficulty rating	Not Available
WCGS difficulty rating and explanation	K2 - Lower order question. The student is required to remember the bases for a emergency procedure step.
Distracter explanation and references	A. Incorrect - Letdown is from the crossover leg upstream of the RCPs. RCS pressure provides the ΔP. Plausible distracter because the second part of the statement is correct. B. Correct - Forced flow is preferred for cooldown and sprays. Additional RCPs would add heat which could unnecessarily delay or hinder cooldown. C. Incorrect - These is no threat to the electrical power supply. Plausible distracter because the first part of the statement is correct. D. Incorrect - These is no threat to the electrical power supply. Plausible distracter because the first part of the statement is correct.
NRC ES-401 Tier and section location	SRO: Tier - 1 Group -2 RO: Tier 1 Group 2
Question original source	Exam Bank
Additional comments	NRC comment: Link stem to bases Linked stem to basis statement

Question 023

During the performance of EMG ES-11, "Post LOCA Cooldown and Depressurization," what is the basis for having only one RCP running?

A. Provides the ΔP required to provide letdown. Additional RCPs would add unnecessary heat load.

B. Desired for spray and RCS heat transport to the S/Gs. Additional RCPs would add unnecessary heat load.

C. Needed for RCS heat transport to the S/Gs. Additional RCPs could overload the electrical power supply in the post LOCA configuration.

D. Desired for spray and RCS mixing. Additional RCPs could overload the electrical power supply in the post LOCA configuration.

Question Number	024
Question	EMG C-11 "Loss of Emergency Coolant Recirculation" has been entered from step 21 of EMG E-1 "Loss of Reactor or Secondary Coolant". The operator is at Step 12 of EMG C-11 to determine Containment Spray requirements (suction from RWST). Given the following plant conditions: • Containment pressure = 28 PSIG • Annunciator 00-47D, RWST LEV LOLO 1 Auto XFR - LIT. • Annunciator 00-47B, RWST EMPTY - NOT LIT. • NB02 Bus lockout on overcurrent. • All other equipment operated as designed. Using the Table below determine the actions required to attain the correct configuration of Fan Coolers and Containment Spray pumps. SEE PAGE THREE TABLE A. Secure two (2) containment fan coolers and secure one (1) containment spray pump. B. Secure two (2) containment fan coolers and start one (1) containment spray pump. C. Running containment fan coolers will remain in service and secure two (2) containment spray pumps. D. Secure no containment fan coolers and secure no containment spray pumps.
Answer	D. Secure no containment fan coolers and secure no containment spray pumps.
Allowed references	None
LP and objective	SY1302600, Rev. 002, Obj. 8
WCGS procedure - print references	BD EMG C-11
NRC KA Topic	W/E11 EA2.1 Ability to determine and interpret the following as they apply to the (loss of emergency coolant recirculation): facility conditions and selection of appropriate procedures during abnormal and emergency operations.
NRC KA topic importance factors	3.4/4.2
NRC 1122 KA - 10CFR55 41/43 tie	43.5/45.13
NRC difficulty rating	Not Available
WCGS difficulty rating and explanation	A4 - Higher order question. The student must analyze the existing plant conditions to determine 1) RWST level is between 6% and 36% based on annunciators, 2) a CSAS signal is present due to containment pressure being > 27 psig, 3)containment spray pump B will not start due to the loss of NB02, and 4) containment coolers B & D will not start due to the loss of NG02 and NG04. This information can then be applied to the

	table parameters.
Distracter explanation and references	A. Incorrect - This answer could be selected if the student mistakenly thought that all equipment was running, 4 containment coolers and 2 containment spray pumps, and that the table parameters of 2 containment fan coolers and 1 containment spray pump running was the goal. It is incorrect because only 2 containment coolers and 1 containment spray pump is running due to the loss of NB02. B. Incorrect - This answer is wrong because it would stop all containment fan coolers, which is not acceptable for the existing conditions. It also starts one containment spray pump which is counterproductive to the procedure goal of extending the life time of the RWST. It is incorrect because only 2 containment coolers and 1 containment spray pump is running due to the loss of NB02. C. Incorrect - This is correct for RWST > 36% with existing containment pressure if all containment fan coolers are running. The selection of this answer is possible if the student incorrectly determines RWST level from the existing information and doesn't realize two fan coolers are lost with loss of NB02. D. Correct - The RWST level is between 6% and 36% based on the annunciators. Containment pressure is between 25 psig and 60 psig. This means a combination of 4 containment coolers and zero containment spray pumps can be running or 2 containment coolers and 1 containment spray pump. The loss of NB02 stops 2 containment coolers and 1 containment spray pump. The remaining equipment running, 2 containment coolers and 1 containment spray pump is the correct amount
NRC ES-401 Tier and section location	SRO: Tier - 1 Group -2 RO: Tier 1 Group 2
Question original source	Modified exam bank
Additional comments	NRC Comment - Certain assumptions or interpretations make "A" & "B" correct. Answer - Revised the explanations for A & B distractors. With the existing initial conditions only 2 containment coolers and 1 containment spray pump would be running This is the minimum required for the initial conditions. No change to the existing cooler/pump configuration is required.

Question: 024

EMG C-11 "Loss of Emergency Coolant Recirculation" has been entered from step 21 of EMG E-1, "Loss of Reactor or Secondary Coolant." The operator is at Step 12 of EMG C-11 to determine Containment Spray requirements (suction from RWST).

Given the following plant conditions:

- Containment pressure = 28 PSIG
- Annunciator 00-47D, RWST LEV LOLO 1 Auto XFR - LIT.
- Annunciator 00-47B, RWST EMPTY - NOT LIT.
- NB02 Bus lockout on overcurrent.
- All other equipment operated as designed.

Using the Table below determine the actions required to attain the correct configuration of Fan Coolers and Containment Spray pumps.

RWST LEVEL	CONTAINMENT PRESSURE	FAN COOLERS RUNNING IN SLOW	SPRAY PUMPS THAT SHOULD BE RUNNING
GREATER THAN	GREATER THAN	----------	2
	BETWEEN 25#	0	2
		2	1
		4	0
	LESS THAN 25#	----------	0
BETWEEN 6%	GREATER THAN	----------	2
	BETWEEN 25#	2	1
		4	0
	LESS THAN 25#	----------	0
LESS THAN 6%	----------	----------	0

A. Secure two (2) containment fan coolers and secure one (1) containment spray pump.

B. Secure two (2) containment fan coolers and start one (1) containment spray pump.

C. Running containment fan coolers will remain in service and secure two (2) containment spray pumps.

D. Secure no containment fan coolers and secure no containment spray pumps.

Question Number	025
Question	During normal full power operation the operator notes that VCT pressure is 10 psig. Which one of the following is the most likely <u>RESULT</u> of this condition? A. Backflow from the RCS through the #1 RCP seal. B. Insufficient flow through the #1 RCP seal. C. Insufficient flow through the #2 RCP seal. D. Flashing in the seal return cooler.
Answer	C. Insufficient flow through the #2 RCP seal.
Allowed references	None
LP and objective	SY1300300, Rev. 006, Obj. 4, SY1300400, Rev. 009, Obj. 9
WCGS procedure - print references	M-12BB03, M-12BG01, M-12BG03
NRC KA Topic	022 AK3.02 Knowledge of the reasons for the following responses as they apply to the loss of reactor coolant makeup: actions contained in SOPs and EOPs for RCPs, loss of makeup, loss of charging, and abnormal charging.
NRC KA topic importance factors	3.5/3.8
NRC 1122 KA - 10CFR55 41/43 tie	41.5/41.10/45.6/45.13
NRC difficulty rating	Not Available
WCGS difficulty rating and explanation	A2 - Higher order question. The student must recognize that the stated VCT pressure is lower than normal and that the driving head for the flow through the #2 seal is the DP between #1 seal leakoff pressure (i.e. VCT pressure) and RCDT pressure. A lower than normal driving head will result in low flow through the seal.
Distracter explanation and references	A. Incorrect - This is incorrect because back-flow from the RCS is a result of loss of seal injection. This answer could be selected if the student thought that reduced VCT pressure would cause possible back-flow. B. Incorrect - This is incorrect because a lower VCT pressure will increase flow through the #1 seal due to decreased backpressure. This answer could be selected if the student thought this was higher than normal VCT pressure which reduces flow through the #1 seal. C. Correct - The flow through the #2 seal is based on DP between #1 seal leakoff pressure (i.e. VCT pressure) and RCDT pressure. 10 psig is lower than the minimum pressure of 15 psig in the VCT. This reduces the DP across the #2 seal which in-turn reduces flow through the seal. D. Incorrect - This cooler will not have flashing with the small increase in seal flow. Seal water is supplied to the seal at < 135°F. This heat exchanger is also sized to handle excess letdown flow at 165°F. This answer could be selected if the student did not realize the seal water heat exchanger could handle a larger heat load.

NRC ES-401 Tier and section location	SRO: Tier 1 Group 2 RO: Tier 1 Group 2
Question original source	Exam Bank
Additional comments	NRC Comment - Emphasis the word "result". Answer - Made the word "result" capitalized and underlined.

Question: 025

During normal full power operation the operator notes that VCT pressure is 10 psig.

Which one of the following is the most likely RESULT of this condition?

A. Backflow from the RCS through the #1 RCP seal.

B. Insufficient flow through the #1 RCP seal.

C. Insufficient flow through the #2 RCP seal.

D. Flashing in the seal return cooler.

Question Number	026
Question	To prevent RHR pumps from damage the EMGs have a time limit on how long an RHR pump can be run on recirculation without CCW flow to the RHR heat exchangers. Which one of the following is that time limit? A. 0.5 hours B. 2.25 hours. C. 2.5 hours. D. 4.0 hours.
Answer	C
Allowed references	None
LP and objective	SY1300500, Obj. 4
WCGS procedure - print references	BD EMG E-1, Step 13
NRC KA Topic	025 AK2.03 Knowledge of the interrelations between the loss of residual heat removal system and the following: service water or closed cooling water pumps.
NRC KA topic importance factors	2.7/2.7
NRC 1122 KA - 10CFR55 41/43 tie	41.7/45.7
NRC difficulty rating	Not Available
WCGS difficulty rating and explanation	K3 - Lower order question. The student must remember the time limit associated with the RHR pumps.
Distracter explanation and references	A. Incorrect - The correct answer is 2.5 hours per calculation for use in the EMGs. This answer could be selected because it is the previous limit used for RHR pump recirculation time before the latest calculations were completed. B. Incorrect - The correct answer is 2.5 hours per calculation for use in the EMGs. This answer could be selected because it is the low flow cavitation period that the RHR pump may be run at < 1700 gpm. C. Correct - The correct answer is 2.5 hours to prevent pump damage per calculation for the EMGs. D. Incorrect - The correct answer is 2.5 hours per calculation for use in the EMGs. This answer could be selected because it is the time limit that CCW can be isolated from the spent fuel pool heat exchangers.
NRC ES-401 Tier and section location	SRO: Tier 1 Group 2 RO: Tier 1 Group 2
Question original source	Wolf Creek August 97 Exam
Additional comments	

Question 026

To prevent RHR pumps from damage the EMGs have a time limit on how long an RHR pump can be run on recirculation without CCW flow to the RHR heat exchangers.

Which one of the following is that time limit?

A. 0.5 hours

B. 2.25 hours.

C. 2.5 hours.

D. 4.0 hours.

Question Number	027
Question	The crew is evaluating a Steam Generator Tube Leak with the following plant parameters: • Letdown flow indicator (FI-132) reads 120 gpm. • CCP "A" is in service. • PZR level is stable. • Seal injection is 8 gpm per loop. • Charging flow is 150 gpm on FI-121. • Identified RCS leakage is 0.9 gpm. • Charging flow control valve is in auto. • Seal leakoff is 3 gpm per loop. What is the amount of primary to secondary leakage? A. 17 gpm B. 29 gpm C. 49 gpm D. 61 gpm
Answer	A. 17 gpm
Allowed references	None
LP and objective	SY1300400, Rev. 009 Obj. 2
WCGS procedure - print references	N/A
NRC KA Topic	037 AK3.03 Knowledge of the reasons for the following responses as they apply to the steam generator tube leak: comparison of makeup flow and letdown flow for various modes of operation.
NRC KA topic importance factors	3.1/3.3
NRC 1122 KA - 10CFR55 41/43 tie	41.5/41.10/45.6/45.13
NRC difficulty rating	Not Available
WCGS difficulty rating and explanation	A3 - Higher order question. The candidate must analyze existing plant conditions to determine which parameters will correctly reflect RCS to S/G leakage. System instrumentation layout has to be understood to know which instruments include what readings.
Distracter explanation and references	A. Correct - Charging is 150 gpm including seal injection. Letdown is 120 gpm and seal return is 12 gpm. This leaves 18 gpm of which 1 gpm is identified leakage. There is 17 gpm unaccounted for. This is the tube leakage. B. Incorrect - This answer is plausible because the candidate could disregard the seal return amount of 12 gpm. C. Incorrect - This answer is plausible because the candidate could believe the 150 gpm charging flow does not include the 32 gpm seal injection. D. Incorrect - This answer is plausible if the candidate believes the 120

	gpm letdown includes the 12 gpm RCP seal return flow and the 150 gpm charging flow does not include the 32 gpm seal injection. Let and leakage would be calculated as 121 gpm. Charging and seal injection would be calculated as 182 gpm. This would indicate leakage at 61 gpm.
NRC ES-401 Tier and section location	SRO: Tier 1 Group 2 RO: Tier 1 Group 2
Question original source	Exam Bank
Additional comments	NRC Comment - "B" is cued because it differs from "A" by only one. Answer - Changed distractor to 61 gpm and resequenced to make it item D.

Question: 027

The crew is evaluating a Steam Generator Tube Leak with the following plant parameters:

- Letdown flow indicator (FI-132) reads 120 gpm.
- CCP "A" is in service.
- PZR level is stable.
- Seal injection is 8 gpm per loop.
- Charging flow is 150 gpm on FI-121.
- Identified RCS leakage is 0.9 gpm.
- Charging flow control valve is in auto.
- Seal leakoff is 3 gpm per loop.

What is the amount of primary to secondary leakage?

A. 17 gpm

B. 29 gpm

C. 49 gpm

D. 61 gpm

Question Number	028
Question	The unit has experienced a reactor trip and safety injection due to a S/G Tube Rupture on the "A" S/G. The operators are about to commence the initial RCS cooldown at the maximum rate in accordance with EMG E-3, "Steam Generator Tube Rupture". The following conditions exist: • S/G "A" water level is 65% NR and rising. • RCS Tavg is 540°F and stable. • Main condenser vacuum is 15" Hg absolute and stable. Which of the following actions are necessary to conduct the RCS cooldown in accordance with E-3 "Steam Generator Tube Rupture". A. Take the steam dumps to the steam pressure mode and then set the controller to the target setpoint. B. Take the steam dumps to the steam pressure mode, take both steam dump bypass interlock switches momentarily to the BYP INTLK position, and then set controller to the target setpoint. C. Adjust setpoint to the target setpoint to open all S/G Atmospheric Relief Valves. D. Adjust setpoint to the target setpoint to open the "B", "C" and "D" S/G Atmospheric relief valves.
Answer	D.
Allowed references	None
LP and objective	LO1732325, Rev. 10, Obj. 2
WCGS procedure - print references	EMG E-3 step 21
NRC KA Topic	000038 EA1.35 Ability to operate and monitor the following as they apply to a SGTR: Steam Condenser
NRC KA topic importance factors	3.5/3.6
NRC 1122 KA - 10CFR55 41/43 tie	41.7/45.5/45.6
NRC difficulty rating	Not Available
WCGS difficulty rating and explanation	A3 -.Higher order question. The student must analyze the plant data to determine that Condenser Vacuum will not support Steam Dump Operation and recognize not to steam a ruptured SG.
Distracter explanation and references	A. Incorrect - Is not correct due to C-9 (5" HgA) condenser Vacuum interlock not met. Credible in that if it was met the procedure specifically calls for this action. B. Incorrect - Is not correct due to C-9 (5" HgA) condenser interlock not met. Credible in that at this temperature the note preceding the procedure step states that the interlock must be bypassed. C. Incorrect - Is not correct in that the procedure calls for all INTACT SG's to be used. "A" is ruptured and therefore not INTACT. Credible in that the intent is too cool down as quickly as possible and using all four SG's would be quicker. D. Correct - "Set intact S/G ARV controllers to target intact S/G pressure".
NRC ES-401 Tier and section location	SRO: Tier 1 Group 2 RO: Tier 1 Group 2

Question original source	Exam Bank
Additional comments	

Question 028

The unit has experienced a reactor trip and safety injection due to a S/G Tube Rupture on the "A" S/G. The operators are about to commence the initial RCS cooldown at the maximum rate in accordance with EMG E-3, "Steam Generator Tube Rupture".

The following conditions exist:

- S/G "A" water level is 65% NR and rising.
- RCS Tavg is 540°F and stable.
- Main condenser vacuum is 15" Hg absolute and stable.

Which of the following actions are necessary to conduct the RCS cooldown in accordance with E-3 "Steam Generator Tube Rupture".

A. Take the steam dumps to the steam pressure mode and then set the controller to the target setpoint.

B. Take the steam dumps to the steam pressure mode, take both steam dump bypass interlock switches momentarily to the BYP INTLK position, and then set controller to the target setpoint.

C. Adjust setpoint to the target setpoint to open all S/G Atmospheric Relief Valves.

D. Adjust setpoint to the target setpoint to open the "B", "C" and "D" S/G Atmospheric relief valves.

Question Number	029
Question	The Operators have just transitioned to EMG FR H1 "Loss of Secondary Heat Sink". The current plant conditions are as follows: • RCS Pressure 2300 psig • NB01 deenergized • RWST Level 40% • "B" Aux Feed Pump DNO tagged • TD Aux Feed Pump Tripped • "B" Centrifugal Charging Pump DNO tagged • SG Wide Range Levels 31% • Containment Pressure 2 psig • PORV's Closed • RCPs Running The Operators should: A. Trip all running Reactor Coolant Pumps B. Try to establish AFW Flow to at least One SG C. Depressurize At least One SG to less than 520 psig D. Go to EMG ES-12 "Transfer to Cold leg Recirculation"
Answer	A.
Allowed references	None
LP and objective	LO1732346
WCGS procedure - print references	EMG FR H1, F.O. Page, BD EMG FR-H1, Step 27
NRC KA Topic	054 AA1.04 Ability to operate and/or monitor the following as they apply to the Loss of Main Feedwater (MFW): HPI, under total feedwater loss conditions.
NRC KA topic importance factors	4.4/4.5
NRC 1122 KA - 10CFR55 41/43 tie	41.7/45.5/45.6
NRC difficulty rating	Not Available
WCGS difficulty rating and explanation	A4 - Higher order question. The Operator must analyze the current plant status to ascertain the correct equipment configuration. With NBO1 4kv bus and "B" CCP out of service both CCPs are unavailable for use. The Loss of Heat Sink procedure directs you at this point to secure RCPs and initiate RCS feed and bleed. The level of difficulty is higher because the option for feed and bleed is not one of the selections. The operator must either have memorized the procedure or recognize that the heat input should be reduced prior to attempting feed and bleed.
Distracter explanation and references	A. Correct - FR-H1 has the operator trip the RCPs before starting feed and bleed. B. Incorrect: If the candidate doesn't recognize the loss of CCPs and its ramifications this would be the appropriate step. C. Incorrect: The candidate must go to feed and bleed without any CCPs. Credible in that this is an action one would come to in the procedure if at least one CCP was available. D. Incorrect: The setpoint for transition to this procedure is not met. Credible

	in that if adverse containment pressures were used this would also be true.
NRC ES-401 Tier and section location	SRO: Tier 1 Group 2 RO: Tier 1 Group 2
Question original source	New
Additional comments	

Question 029

The Operators have just transitioned to EMG FR H1 "Loss of Secondary Heat Sink". The current plant conditions are as follows:

- RCS Pressure 2300 psig
- NB01 deenergized
- RWST Level 40%
- "B" Aux Feed Pump DNO tagged
- TD Aux Feed Pump Tripped
- "B" Centrifugal Charging Pump DNO tagged
- SG Wide Range Levels 31%
- Containment Pressure 2 psig
- PORV's Closed
- RCPs Running

The Operators should:

A. Trip all running Reactor Coolant Pumps

B. Try to establish AFW Flow to at least One SG

C. Depressurize At least One SG to less than 520 psig

D. Go to EMG ES-12 "Transfer to Cold leg Recirculation"

Question number	030
Question	The plant has experienced a LOCA from full power. The crew is transitioning to EMG E-1 when the following parameters are reported: • Containment pressure 8 psig • RCS pressure 900 psig • RCS temperature 400°F • Steam header pressure 1092 psig • S/G "A' NR level 23% • S/G "B' NR level 20% • S/G "C' NR level 21% • S/G "D' NR level 19% Aux. Feedwater flow is ≈ 200,000 lbm/hr and cannot be increased. What actions are required? A. Transition to EMG FR-H5 and restore S/G levels. B. Continue in EMG E-1 because Aux. Feed cannot be increased. C. Transition to EMG FR-H1 and restore feed using feed and condensate system. D. Transition to EMG FR-H1 but return to the procedure and step in effect.
Answer	D
Allowed References	None
LP and Objective	LO1732346
WCGS procedure - print references	EMG FR-H1, Step 1, BD-EMG FR-H1, Step 1
NRC KA topic	WE05 EK2.2 Knowledge of the interrelations between the (Loss of Secondary Heat Sink) and the following: Facilities heat removal systems, including primary coolant, emergency coolant, the decay heat removal systems, and relations between proper operation of these systems to the operation of the facility.
NRC KA topic importance factors	3.9/4.2
NRC 1122 KA 10CRF 41/43 tie	41.7/45.7
NRC difficulty rating	Not Available
WCGS difficulty rating and explanation	A - 3 Higher order. Requires student to analyze S/G levels and Aux. Feed flow conditions before determining an inadequate secondary heat sink exists. Then they must apply their knowledge of the procedure to determine the proper response. Level Difficulty three is assigned. The student must integrate the S/G levels and auxiliary feedflow relationships to determine need to feed. This is complicated by the requirement to factor in adverse containment conditions. Then they must apply their procedure knowledge to the setting before determining that although an inadequate secondary heat sink exists break flow is removing decay heat.

Distracter explanation and references	A. Incorrect - EMG FR-H5 is a 'Yellow' path and would not be entered with the 'Red' path on heat sink. Could be entered with improper performance of the status trees. B. Incorrect - With a valid 'Red' path rules of usage require you to transition to the appropriate functional restoration. C. Incorrect - Step 1 asks if RCS pressure > S/G pressure, if no you are directed to return to the procedure and step in effect. This would be implemented with incorrect procedure usage. D. Correct - Step 1 asks if RCS pressure > S/G pressure, if no you are directed to return to procedure and step in effect.
NRC ES-401 Tier and section location	SRO: Tier 1 Group 2 RO: Tier 1 Group 2
Question original source	Wolf Creek Feb. 1998 NRC Exam
Additional comments	

Question 030

The plant has experienced a LOCA from full power. The crew is transitioning to EMG E-1 when the following parameters are reported:

- Containment pressure 8 psig
- RCS pressure 900 psig
- RCS temperature 400°F
- Steam header pressure 1092 psig
- S/G "A' NR level 23%
- S/G "B' NR level 20%
- S/G "C' NR level 21%
- S/G "D' NR level 19%

Aux. Feedwater flow is ≈ 200,000 lbm/hr and cannot be increased.

What actions are required?

A. Transition to EMG FR-H5 and restore S/G levels.

B. Continue in EMG E-1 because Aux. Feed cannot be increased.

C. Transition to EMG FR-H1 and restore feed using feed and condensate system.

D. Transition to EMG FR-H1 but return to the procedure and step in effect.

Question Number	031
Question	Given the following: • The Unit is operating at 100% power with all systems in their normal at-power, configurations. • The PZR level selector switch is selected to LT459&LT460. • LT459 PZR level transmitter fails at 57%. Assuming NO operator action is taken, which of the following describes the system response when plant load is REDUCED to 50%? Charging flow… A. and actual PZR level will rise. The Rx will trip on high PZR level. B. will rise and actual PZR level will be maintained at 57%. The B/U heaters will energize, and the Rx will not trip. C. and actual PZR level will drop. At 17% actual PZR level, letdown will isolate and all PZR heaters will de-energize. D. remains constant but actual PZR level drops. No control or protective actions will occur.
Answer	C.
Allowed references	None
LP and objective	SY1301000, Rev. 2, Obj. 5
WCGS procedure - print references	N/A
NRC KA Topic	000028 AA1.02 Ability to operate and or monitor the following as they apply to the Pressurizer Level Control Malfunctions: PZR Level as a function of power level or Tave including interpretation of malfunction.
NRC KA topic importance factors	3.4/3.8
NRC 1122 KA - 10CFR55 41/43 tie	43.5/45.13
NRC difficulty rating	N/A
WCGS difficulty rating and explanation	A3 - Higher order question. When LT459 fails at 57%(Normal 100% level), and the power reduction causes the Pzr level setpoint to decrease, a net error signal will be sensed by the Pzr level controller which will decrease charging flow to try to correct the error. As charging flow is reduced, actual Pzr level will decrease. Because LT460 is not failed, it will sense the actual level. Eventually, actual level will decrease to 17% and LB460D will deenergize the backup heaters (energized at 5% deviation by LB 459E) and close LCV-460(letdown isolation). Applicant must know multiple items and process information between different systems to determine outcome.
Distracter explanation and references	A. Incorrect: The PZR level controller will be sensing actual level to be above setpoint and charging flow will be reduced. Credible if assumed actual Pzr

	level were to rise then a Reactor trip would occur. B. Incorrect: The PZR level controller will be sensing actual level to be above setpoint and charging flow will be reduced. Credible if assumed actual Pzr level were to remain constant at the LT459 failed level. C. Correct - See difficulty explanation D. Incorrect: The pressurizer master level controller will sense a deviation high as the level setpoint decreases due to the power reduction. This deviation will reduce charging flow. Credible as level has failed at a 100% level.
NRC ES-401 Tier and section location	SRO Tier 1 Group 3 RO: Tier 1 Group 3
Question original source	Exam Bank
Additional comments	

Question 031

Given the following:

- The Unit is operating at 100% power with all systems in their normal at-power, configurations.
- The PZR level selector switch is selected to LT459&LT460.
- LT459 PZR level transmitter fails at 57%.

Assuming NO operator action is taken, which of the following describes the system response when plant load is REDUCED to 50%?

Charging flow...

A. and actual PZR level will rise. The Rx will trip on high PZR level.

B. will rise and actual PZR level will be maintained at 57%. The B/U heaters will energize, and the Rx will not trip.

C. and actual PZR level will drop. At 17% actual PZR level, letdown will isolate and all PZR heaters will de-energize.

D. remains constant but actual PZR level drops. No control or protective actions will occur.

Question Number	032
Question	Which one of the following design features provides the interlock that prevents raising irradiated fuel with the new fuel elevator? A. An area radiation monitor B. A weight sensing device C. The upper travel limit switch D. The lower travel limit switch
Answer	B A weight sensing device
Allowed references	None
LP and objective	SY1403400, Obj. 2
WCGS procedure - print references	FHP 03-009 Section 8.3
NRC KA Topic	036 AK3.02 Knowledge of the reasons for the following responses as they apply to the Fuel Handling Incidents: Interlocks associated with fuel handling equipment.
NRC KA topic importance factors	2.9/3.6
NRC 1122 KA - 10CFR55 41/43 tie	41.5/41.10/45.6/45.13
NRC difficulty rating	Not Available
WCGS difficulty rating and explanation	K2 This is a straight knowledge question relating the interlock prohibiting the raising of an irradiated fuel assembly by weight vice other mechanical means.
Distracter explanation and references	A. Incorrect, the Area Radiation Monitor's have no control functions. Credible as raising an irradiated assembly would radically raise Area Radiation Levels. B. Correct. Per procedure FHP 03-009 Section 8.3 which tests this interlock C. Incorrect, The upper limit switch is a travel stop past the normal range of travel. It will not prevent travel until the assembly is already raised. Credible as limit switches provide input to numerous interlocks on travel throughout the plant. D. Incorrect, The Lower limit switch is a travel stop past the normal range of travel. It will not prevent travel in the upward direction. Credible as limit switches provide input to numerous interlocks on travel throughout the plant.
NRC ES-401 Tier and section location	SRO: Tier 1 Group 3 RO: Tier 1 Group 3
Question original source	Exam Bank
Additional comments	

Question 032

Which one of the following design features provides the interlock that prevents raising irradiated fuel with the new fuel elevator?

A. An area radiation monitor

B. A weight sensing device

C. The upper travel limit switch

D. The lower travel limit switch

Question Number	033
Question	At EOL a loss of power has occurred. EMG C-0, "Loss of All AC Power," is in progress and the intact steam generators are being depressurized to 260 psig. The Reactor Operator reports a positive startup rate on the source and intermediate range channels. What action is required? A. Control the S/G ARVs or TD AFWP to stop the depressurization and allow the RCS to heat up. B. Control the S/G ARVs or TD AFWP to stabilize temperature until Xenon builds in. C. Slow down the cooldown rate to 50 °F/hr to allow Xenon to maintain reactor subcritical. D. Increase the cooldown rate so ECCS accumulators can inject before point of adding heat is reached.
Answer	A
Allowed references	None
LP and objective	LO 1732329
WCGS procedure - print references	EMG C-0, Step29 BD EMG C-0 page 66.
NRC KA Topic	000 056 2.4.48 Ability to interpret control room indications to verify the status and operation of the system, and understand how operator actions and directives affect plant and system conditions.
NRC KA topic importance factors	3.5/3.8
NRC 1122 KA - 10CFR55 41/43 tie	43.5
NRC difficulty rating	N/A
WCGS difficulty rating and explanation	K-3 - Recall question. Difficulty level three. Student must recall the basis of the step and then differentiate between the distracters. Assigned a higher difficulty due to the plausibility of the distracters.
Distracter explanation and references	A. Correct - αT is the only mechanism available to insert negative reactivity into the core, C-0 has the operator stop the depressurization and allow the RCS to heat-up. B. Incorrect - BD-EMG C-0 requires depressurization be stopped and the core allowed to heat up The core is allowed to heat up to allow the $-\alpha T$. C. Incorrect - During depressurization steam is dumped at the maximum rate unless S/G NR level cannot be maintained or the reactor has a positive startup rate. Xenon does build initially after a trip. D. Incorrect - C-0 specifically gives the operator guidance in stopping depressurization and letting the RCS heat-up.
NRC ES-401 Tier and section location	SRO: Tier - 1 Group -3 RO: Tier 1 Group 3
Question original source	Wolf Creek Feb. 1998 NRC Exam
Additional comments	

Question 033

At EOL a loss of power has occurred. EMG C-0, "Loss of All AC Power," is in progress and the intact steam generators are being depressurized to 260 psig.

The Reactor Operator reports a positive startup rate on the source and intermediate range channels.

What action is required?

A. Control the S/G ARVs or TD AFWP to stop the depressurization and allow the RCS to heat up.
B. Control the S/G ARVs or TD AFWP to stabilize temperature until Xenon builds in.
C. Slow down the cooldown rate to 50 °F/hr to allow Xenon to maintain reactor subcritical.
D. Increase the cooldown rate so ECCS accumulators can inject before point of adding heat is reached.

Question Number	034
Question	The Control Room is performing STS SF-001 "Control and Shutdown Rod Operability Verification" on Control Bank "B". While returning Bank "B" to its fully withdrawn position a Rod Control Urgent alarm (79A) is received and all rod movement stops and there are no other alarms. From this information it can be determined that there is a problem in: A. The Logic Cabinet. B. The Power Cabinet. C. The Reactor Control Unit. D. One of the Rod Withdrawal Blocks.
Answer	A
Allowed references	None
LP and objective	SY 13 001 00, Rev. 004, Obj. 10
WCGS procedure - print references	STS SF-001
NRC KA Topic	001 K6.11
NRC KA topic importance factors	2.9/3.2
10CFR55 41/43 tie	41.5/45.7
NRC difficulty rating	1-22-98 A/3
WCGS difficulty rating and explanation	A-3 - Higher order in that it requires integrating information on the system and a surveillance to diagnose a problem. Difficulty level three based on first understanding the current condition of rod control, then recalling how the different components function followed by differentiating between a power cabinet, reactor control unit, rod block or logic cabinet failure.
Distracter explanation and references	A. Correct - A Logic Cabinet Urgent failure stops all rod motion, auto and manual, including when an individual bank is selected as would be the case while performing STS SF-001. B. Incorrect - If problem were in the power cabinet, the rods would have continued to move as an individual bank was selected. If it were a power cabinet problem associated with Bank B, only 1 group of bank B rods would have stopped. All rods stopping would require simultaneous failures in both power cabinets associated with Bank B. C. Incorrect - The Reactor Control Unit provides an input to the Logic Cabinet and a failure in the RCU would not cause an urgent failure alarm. D. Incorrect - A Rod withdrawal block problem would stop outward motion only, not "all rod movement stops" as given in the stem. Also a problem in one of the blocks would not cause an urgent failure alarm.

NRC ES-401 Tier and section location	RO: Tier - 1 Group -1 SRO: Tier 1 Group 1
Question original source	Wolf Creek NRC Exam Feb. 98
Additional comments	

Question: 034

The Control Room is performing STS SF-001 "Control and Shutdown Rod Operability Verification" on Control Bank "B".

While returning Bank "B" to its fully withdrawn position a Rod Control Urgent alarm (79A) is received and all rod movement stops and there are no other alarms.

From this information it can be determined that there is a problem in:

A. The Logic Cabinet.

B. The Power Cabinet.

C. The Reactor Control Unit.

D. One of the Rod Withdrawal Blocks.

Question Number	035
Question	Plant operators are in the process of starting an RCP using SYS BB-201. When the hand switch for RCP D was placed in the start position, the pump did not start and the orange light illuminated. The following parameters existed at the time of the attempted pump start: • VCT pressure - 30 psig • #1 seal D/P - 290 psid • RCS pressure - 330 psig • CCW to RCP flow alarms - clear • Thermal Barrier flow alarms - clear • Lift oil pump - running for 30 seconds • Lift oil pressure - 500 psig • Seal injection per pump- 12 gpm • PA01/02 - energized • Upper oil reservoir level - 25% Why did the RCP fail to start? A. #1 seal D/P was low. B. The lift oil pressure was too low. C. Upper oil reservoir level was low. D. The lift oil pump was not running long enough.
Answer	B.
Allowed references	None
LP and objective	SY1300300, Rev. 006, Objective 3
WCGS procedure - print references	SYS BB-201, E13BB01,E03BB02
NRC KA Topic	003 A3.05 Ability to monitor automatic operation of the RCPs, including: RCP lube oil and bearing lift pumps.
NRC KA topic importance factors	2.7*/2.6
NRC 1122 KA - 10CFR55 41/43 tie	41.7/45.5 to 45.8
NRC difficulty rating	N/A
WCGS difficulty rating and explanation	K2 The candidate need only know the electrical interlocks associated with the Reactor Coolant Pump breaker.
Distracter explanation and references	A. Incorrect - This is not an electrical interlock. Credible in that it is required to be met for starting criteria. B. Correct. This is an electrical interlock set at 600 psig. C. Incorrect - This is not an electrical interlock. Credible in that it is required to be met for starting criteria. D. Incorrect - This is not an electrical interlock. Credible in that it is required to be met for starting criteria.
NRC ES-401 Tier	RO: Tier - 2 Group -1

and section location	SRO: Tier 2 Group 1
Question original source	Exam Bank
Additional comments	

Question 035

Plant operators are in the process of starting an RCP using SYS BB-201. When the hand switch for RCP D was placed in the start position, the pump did not start and the orange light illuminated. The following parameters existed at the time of the attempted pump start:

- VCT pressure - 30 psig
- #1 seal D/P - 290 psid
- RCS pressure - 330 psig
- CCW to RCP flow alarms - clear
- Thermal Barrier flow alarms - clear
- Lift oil pump - running for 30 seconds
- Lift oil pressure - 500 psig
- Seal injection per pump- 12 gpm
- PA01/02 - energized
- Upper oil reservoir level - 25%

Why did the RCP fail to start?

A. #1 seal D/P was low.

B. The lift oil pressure was too low.

C. Upper oil reservoir level was low.

D. The lift oil pump was not running long enough.

Question Number	036
Question	The Operators are responding to a Steam Generator Rupture on "C" Steam Generator using EMG E-3 "Steam Generator Tube Rupture". They are depressurizing the RCS using normal spray, with all RCP's running, and have just reached the desired RCS pressure. The spray valves used in the depressurization stick in the full open position. The Operators will stop further depressurization by securing, at a minimum: A. All RCPs B. "A" & "D" RCPs C. "B" & "D" RCPs D. "A", "B" &"D" RCPs
Answer	D.
Allowed references	None
LP and objective	SY1301000, Obj. 3
WCGS procedure - print references	EMG E-3 "Steam Generator Tube Rupture" Step 25C
NRC KA Topic	004 A4.09 Ability to manually operate and/or monitor in the control room: PZR spray and heater controls.
NRC KA topic importance factors	3.5/3.3
NRC 1122 KA - 10CFR55 41/43 tie	41.7/45.5 to 45.8
NRC difficulty rating	Not Available
WCGS difficulty rating and explanation	A3 The Operators must know that both Spray valves are being used. They must remember which loop the spray valves tap off of and then must analyze the effects of stopping the various combination of RCPs on spray flow. Stopping the "D" pump increases the static head reducing the ΔP. The spray valves tap off the "A" and "B" loops. In addition there is procedural guidance as to which pump to stop but it is not expected for the candidate to commit this to memory.
Distracter explanation and references	A. Incorrect: This would stop the depressurization but it is not the minimum and would unnecessarily complicate the recovery efforts. Credible in that it is effective in stopping the pressure increase. B. Incorrect: This would be effective for one spray valve only. "D" is used for both pumps to reduce the static driving head as the surge line is on this loop. Credible in that it is the response for a single stuck spray valve. C. Incorrect: This would be effective for one spray valve only. "D" is used for both pumps to reduce the static driving head as the surge line is on this loop. Credible in that it is the response for a single stuck spray valve. D. Correct: Procedurally correct. Secures the loops with the spray attachments and the surge line yet leaves a "C" RCP preventing the plant from transitioning to Natural Circulation.
NRC ES-401 Tier and section location	SRO: Tier 2 Group 1 RO: Tier 2 Group 1
Question original source	New
Additional comments	

Question 036

The Operators are responding to a Steam Generator Rupture on "C" Steam Generator using EMG E-3 "Steam Generator Tube Rupture".

They are depressurizing the RCS using normal spray, with all RCP's running, and have just reached the desired RCS pressure.

The spray valves used in the depressurization stick in the full open position.

The Operators will stop further depressurization by securing, at a minimum:

A. All RCPs

B. "A" & "D" RCPs

C. "B" & "D" RCPs

D. "A", "B" &"D" RCPs

Question Number	037
Question	The plant is at 75% power when a new Letdown Demineralizer is placed in service. Which one of the following will occur if the boric acid saturation of this demineralizer is incomplete? A. Control rods will step inward. B. Control rods will step outward. C. Primary coolant pH will decrease. D. Letdown flowrate will decrease.
Answer	A.
Allowed references	None
LP and objective	SY1300400 Rev.009
WCGS procedure - print references	N/A
NRC KA Topic	004 2.1.32 Ability to explain and apply all system limits and precautions
NRC KA topic importance factors	3.4/3.8
NRC 1122 KA - 10CFR55 41/43 tie	41.10/43.2/45.12
NRC difficulty rating	Not Available
WCGS difficulty rating and explanation	A3 - Higher order question. The candidate must recognize that an unsaturated resin bed will absorb boron and that the RCS will ultimately undergo a dilution. This will result in a positive reactivity excursion which will be compensated for by inward rod motion.
Distracter explanation and references	A. Correct: Boron will be removed from the RCS increasing Tave which the rod control system will counteract with a rod insertion. B. Incorrect: A reduction in boron concentration will result in a positive reactivity addition which would need to be counteracted with a rod insertion. Credible in that rods will react to the dilution. C. Incorrect: pH will increase as boron is withdrawn from the core. Credible in that pH will be affected. D. Incorrect: Letdown flow is a function of backpressure and orifice size which will remain constant. Credible in that the demineralizer is in the letdown stream.
NRC ES-401 Tier and section location	SRO: Tier 2 Group 1 RO: Tier 2 Group 1
Question original source	Wolf Creek Aug 97
Additional comments	

Question 037

The plant is at 75% power when a new Letdown Demineralizer is placed in service. Which one of the following will occur if the boric acid saturation of this demineralizer is incomplete?

A. Control rods will step inward.

B. Control rods will step outward.

C. Primary coolant pH will decrease.

D. Letdown flowrate will decrease.

Question Number	038
Question	Containment pressure transmitter PT-937 has been declared inoperable. Which ONE of the following statements best describes the coincidence for a Containment Spray Actuation after the required Technical Specification actions are taken? A. 2/3 coincidence after the channel is placed in the TRIP condition. B. 2/3 coincidence after the channel is placed in the BYPASS condition. C. 1/3 coincidence after the channel is placed in the TRIP condition. D. 1/3 coincidence after the channel is placed in the BYPASS condition.
Answer	B.
Allowed references	None
LP and objective	SY1301301 Objective 4
WCGS procedure - print references	OFN SB-008 Attachment N page 57 M 744-025
NRC KA Topic	013 K5.02 Knowledge of the operational implications of the following concepts as they apply to the ESFAS: Safety system logic and reliability
NRC KA topic importance factors	2.9/3.2
NRC 1122 KA - 10CFR55 41/43 tie	41.5/45.7
NRC difficulty rating	Not Available
WCGS difficulty rating and explanation	A3 - Higher order question. The candidate must differentiate between the different coincidence for the Containment Spray signals: Spray actuation(High 3-requires 2 out of 4) and a Safety Injection signal(High 1-requires 2 out of 3). In addition the bistables are bypassed for the High 3 instead of tripped for the High 1. Once he has selected the proper initial coincidence he must evaluate the effect of bypassing the channel vice tripping the bistable on the resulting coincidence.
Distracter explanation and references	A. Incorrect: The bistable is bypassed vice tripped. Credible in that all bistables other than Hi3 Containment Spray are required to be tripped. B. Correct: Bistable is bypassed which removes the channel from service. In effect no input to the 2 out of 4 AND box. This results in an effective 2 out of 3 coincidence. C. Incorrect: Coincidence is 2 out of 3 and the bistable is in bypass vice trip. Credible in that all bistables other than Hi3 Containment Spray are required to be tripped. Also if the bistable were to be tripped it would be a 1 out of 3 coincidence. D. Incorrect: Coincidence is 2 out of 3. Credible, if the bistable were to be tripped it would be a 1 out of 3 coincidence.
NRC ES-401 Tier and section location	SRO: Tier 2 Group 1 RO: Tier 2 Group 1
Question original source	Exam Bank
Additional comments	

Question 038

Containment pressure transmitter PT-937 has been declared inoperable.

Which ONE of the following statements best describes the coincidence for a Containment Spray Actuation after the required Technical Specification actions are taken?

A. 2/3 coincidence after the channel is placed in the TRIP condition.

B. 2/3 coincidence after the channel is placed in the BYPASS condition.

C. 1/3 coincidence after the channel is placed in the TRIP condition.

D. 1/3 coincidence after the channel is placed in the BYPASS condition.

Question Number	039
Question	Wolf Creek is operating at 65% power with all systems in their at-power, normal configurations. Power is being raised with Rod Control in AUTO with Control Bank D Group Step Counter at 170 steps, when ONLY the following Annunciators are received: • [00-80C] RPI ROD Dev • [00-78B] PR UPPER DETECTER FLUX DEV • [00-78A] PR CHANNEL DEVIATION Which of the following events would cause the plant conditions listed above? A. Rod control urgent failure on the Control Bank D Group 1 power cabinet. B. One control rod is misaligned from its group step counter by greater than 12 steps. C. A single Digital Rod Position Indicator in Control Bank D has failed at 157 steps. D. A single control rod in close proximity to a neutron detector has dropped.
Answer	D.
Allowed references	None
LP and objective	SY1301501 Objective 7, SY1301400 Objective 6
WCGS procedure - print references	[00-80C] RPI ROD Dev, [00-78B] PR UPPER DETECTER FLUX DEV [00-78A] PR CHANNEL DEVIATION
NRC KA Topic	014 K5.01 Knowledge of the operational implications of the following concepts as they apply to the RPIS: Reasons for differences between RPIS and step counter.
NRC KA topic importance factors	2.7/3.0
NRC 1122 KA - 10CFR55 41/43 tie	41.5/45.7
NRC difficulty rating	Not Available
WCGS difficulty rating and explanation	A4 - Higher order question. To answer this question one must know the Rod Control System, the Rod Position Indication System and the Nuclear Instrumentation System and a good understanding of Operational Reactor Physics. In addition one must also understand the concept of radial flux tilts and Power Range QPTR. One must also be able to differentiate between a minor rod misalignment and a gross misalignment and the effectiveness of the radial positioning of the dropped rod.
Distracter explanation and references	A. Incorrect: An Urgent failure indicates a rods inability to move or has misstepped. Not that it has dropped or misaligned. Credible in that the RPI ROD DEV Alarm Response has as an Entry condition the 00-080A RPI URG ALARM. B. Incorrect: A control rod misaligned by approximately 12 steps would not have the effect on the power range instruments as indicated by the other alarms. The rod cannot be misaligned by too much more than 12 steps as the alarm would have come in as rods were stepping out during the power ascension and the operator would have stopped to investigate. Credible in that the operator must distinguish between a gross misalignment and a minor rod misalignment otherwise this answer could be correct.

	C. Incorrect: A pure indication problem would not have crossed system boundaries to affect the Power Range NI's. Credible in that this would give you a RPI ROD DEV Alarm. D. Correct: A dropped rod close to a NI detector would cause a flux depression that the NI detector would sense as a radial tilt.
NRC ES-401 Tier and section location	SRO: Tier 2 Group 1 RO: Tier 2 Group 2
Question original source	Exam Bank
Additional comments	

Question 039

Wolf Creek is operating at 65% power with all systems in their at-power, normal configurations. Power is being raised with Rod Control in AUTO with Control Bank D Group Step Counter at 170 steps, when ONLY the following Annunciators are received:

- [00-80C] RPI ROD Dev
- [00-78B] PR UPPER DETECTER FLUX DEV
- [00-78A] PR CHANNEL DEVIATION

Which of the following events would cause the plant conditions listed above?

A. Rod control urgent failure on the Control Bank D Group 1 power cabinet.

B. One control rod is misaligned from its group step counter by greater than 12 steps.

C. A single Digital Rod Position Indicator in Control Bank D has failed at 157 steps.

D. A single control rod in close proximity to a neutron detector has dropped

Question Number	040
Question	A reactor trip has occurred from 100% power due to a Loss of two Reactor Coolant Pumps. The conditions 5 minutes following the trip are as follows. • PZR Pressure 2235 psig • PZR Level 22% • NR S/G Level 0% • Aux Feed Flow 600,000 lbm/hr • Yellow Train Subcooling 1150°F Super Heat • Red Train Subcooling 90°F Subcooled • RVLIS Forced Flow Range 47% • RVLIS Natural Circ Range >104% The Reactor Operator has just reported to the Supervising Operator that 1/2 of the thermocouples (CETs) are reading 1800°F while the remaining thermocouples are reading 560°F. Select from the following the proper course of action: A. Thermocouples are not operating properly, continue with procedure in effect. B. Thermocouples are damaged but transition to EMG FR-C2 "Response to Degraded Core Cooling" to verify conditions and return to procedure and step in effect. C. Thermocouples are indicative of gross core damage as there is no credible means to damage this number of TC's, transition to EMG FR-C1 "Response to Inadequate Core Cooling". D. Thermocouples are indicative of gross core damage due to flow blockage immediately start all available RCP's.
Answer	A.
Allowed references	Steam Tables
LP and objective	SY1300202 Objective 4
WCGS procedure - print references	EMG FR-C1 &C-2
NRC KA Topic	017 A2.01 Ability to predict the impacts of the following malfunctions or operations on the ITM system; and based on those predictions, use procedures to correct, control or mitigate the consequences of those malfunctions or operations: Thermocouple open and short circuits
NRC KA topic importance factors	3.1/3.5
NRC 1122 KA - 10CFR55 41/43 tie	41.5/43.5/45.3/45.5
NRC difficulty rating	Not Available
WCGS difficulty rating and explanation	A4 - Higher order question. The operator must recognize that an instrument failure (1/2 of CETs) has occurred and must analyze multiple plant parameters to determine which of the Subcooling instruments are reading correctly and then determine the correct procedural path.
Distracter explanation and references	A. Correct: 25 Thermocouples enter a junction box and then feed the Yellow Train RCS Degrees Subcooling Monitor BB TI 1390A. The

	Thermocouples are exhibiting a common failure mode at the junction box indicative of an open circuit. All other plant parameters are consistent with normal conditions following a plant trip. The operator should realize that with no inventory loss and a heat sink available there is not any mechanism for the core to overheat to the degree indicated by the failure. B. Incorrect. Entry conditions for EMG FR-C1 are met, if one assumes that the 1800°F TC readings are correct, which is a higher priority functional recovery. Credible in that EMG FR-C2 is used to mitigate core damage. C. Incorrect: If the mitigating strategy for EMG FR-C1 is implemented the recovery process would be greatly hampered and significantly degrade the margin to safety of the reactor. Credible in that the entry conditions for FR C-1 are seemingly met. D. Incorrect: There are no immediate actions for Inadequate Core Cooling. If EMG FR-C1 were to be entered these actions are much later in the procedure. Credible in that these are required actions if Core temperatures cannot be stabilized.
NRC ES-401 Tier and section location	SRO: Tier 2 Group 1 RO: Tier 2 Group 1
Question original source	New
Additional comments	

Question 040

A reactor trip has occurred from 100% power due to a Loss of two Reactor Coolant Pumps. The conditions 5 minutes following the trip are as follows.

- PZR Pressure 2235 psig
- PZR Level 22%
- NR S/G Level 0%
- Aux Feed Flow 600,000 lbm/hr
- Yellow Train Subcooling 1150°F Super Heat
- Red Train Subcooling 90°F Subcooled
- RVLIS Forced Flow Range 47%
- RVLIS Natural Circ Range >104%

The Reactor Operator has just reported to the Supervising Operator that 1/2 of the thermocouples (CETs) are reading 1800°F while the remaining thermocouples are reading 560°F.

Select from the following the proper course of action:

A. Thermocouples are not operating properly, continue with procedure in effect.

B. Thermocouples are damaged but transition to EMG FR-C2 "Response to Degraded Core Cooling" to verify conditions and return to procedure and step in effect.

C. Thermocouples are indicative of gross core damage as there is no credible means to damage this number of TC's, transition to EMG FR-C1 "Response to Inadequate Core Cooling".

D. Thermocouples are indicative of gross core damage due to flow blockage immediately start all available RCP's.

Question Number	041
Question	The Unit is at 100% power and air temperature in Containment has decreased. Consider the effects of the following changes individually. Select the reason for the change in Containment air temperature. A. Securing a Service Water pump. B. Lake temperature decreasing. C. Pipe break in the Centrifugal Charging Pump room cooler. D. Placing a Spent Fuel Pool heat exchanger in service.
Answer	B. Lake temperature decreasing.
Allowed references	None
LP and objective	SY 1302600, Rev. 2, Obj. 2
WCGS procedure - print references	N/A
NRC KA Topic	022 A1.04 Ability to predict and/or monitor change in parameters (to prevent exceeding design limits) associated with operating the CCS controls including: Cooling water flow.
NRC KA topic importance factors	3.2/3.4
NRC 1122 KA - 10CFR55 41/43 tie	41.5/45.5
NRC difficulty rating	Not Available
WCGS difficulty rating and explanation	A2 - Higher order question. The Operator must analyze the effects of Cooling water flow and temperature on the Containment Coolers and then extrapolate that to the Containment Air Temperature.
Distracter explanation and references	A. Incorrect: The Service Water pump will decrease Header pressure and tend to reduce flow through the orifice plates to the Containment coolers. Decreased flow will result in a reduced heat transfer from containment to the SW header resulting in an increased air temperature out of the cooler. Credible in that the pump will effect air temp and the candidate must understand its relationship to flow and temperature do exclude it. B. Correct: SW temperature in to the cooler will decrease resulting in decreased air outlet temperature C. Incorrect: The pipe break will tend to divert flow through the break and reduce system pressure which will reduce flow to the containment. Credible in that this failure effects system pressure which in turn affects SW flow to the coolers. D. Incorrect: This will increase SW flow to the CCW Heat Exchangers and reduce flow the containment. Credible in that this evolution affects system pressure which in turn affects SW flow to the coolers.

NRC ES-401 Tier and section location	SRO: Tier 2 Group 1 RO: Tier 2 Group 1
Question original source	New
Additional comments	NRC Comment - "D" could be argued as correct since a plant cooldown will reduce containment temperature. Answer - Changed distractor "D" to the Spent Fuel Pool heat exchanger and added to the stem that the unit is at 100% power. This should not decrease containment temperature.

Question: 041

The Unit is at 100% power and air temperature in Containment has decreased.

Consider the effects of the following changes individually. Select the reason for the change in Containment air temperature.

A. Securing a Service Water pump.

B. Lake temperature decreasing.

C. Pipe break in the Centrifugal Charging Pump room cooler.

D. Placing a Spent Fuel Pool heat exchanger in service.

Question Number	042
Question	A valid Containment Spray Actuation Signal (CSAS) was received and has not been reset. When can the Spray Additive Tank isolation valves first be closed by the operator? A. When the Spray Additive Tank low level setpoint is reached. B. After the Containment Spray Actuation Signal (CSAS) is reset. C. When the Spray Additive Tank low-low level setpoint is reached. D. Anytime after the Containment Spray Actuation signal (CSAS) was received.
Answer	A. When the Spray Additive Tank low level setpoint is reached.
Allowed references	N/A
LP and objective	LO 13 026 00, Rev. 8, Objective 7
WCGS procedure - print references	E-13EN04
NRC KA Topic	026 000 A 3.01 Ability to monitor automatic operation of the CSS including: pump starts and correct MOV positioning.
NRC KA topic importance factors	4.3 / 4.5
NRC 1122 KA - 10CFR55 41/43 tie	41.7/43.5
NRC difficulty rating	Not Available
WCGS difficulty rating and explanation	K-2 - Lower order in that it requires recall of the basis for the spray additive tank low level alarm and/or evaluation of the choices presented.
Distracter explanation and references	A. Correct - The low level set point on the tank is the level at which sufficient NaOH has been added to assure a minimum sump pH of 8.5. At the low level setpoint the operator can manually close the valve. B. Incorrect - At the low level setpoint the operator can manually close the valve. This is a plausible distractor because the candidate could mistake this as similar to the phase A reset required before manipulating phase A valves. C. Incorrect - This is below the volume required, the valves receive an auto-close if the operator has not closed them to prevent N2 being injected. This is a plausible distractor because it is an automatic control point for this valve. D. Incorrect - At the low level setpoint the operator can manually close the valve. This is a plausible distractor if the candidate considers that they opened on the CSAS and have no interlocks to prevent early closing.
NRC ES-401 Tier	RO: Tier - 2 Group 2

and section location	SRO: Tier 2 Group 1
Question original source	Wolf Creek Feb. 1998 NRC Exam
Additional comments	NRC Comment - Distractors "C" and "D: are not credible. Answer - Revised distractors "C" and "D" to base closure on the CSAS vs. the RWST level. Distractors were resequenced based on length.

Question: 042

A valid Containment Spray Actuation Signal (CSAS) was received and has not been reset.

When can the Spray Additive Tank isolation valves first be closed by the operator?

A. When the Spray Additive Tank low level setpoint is reached.
B. After the Containment Spray Actuation Signal (CSAS) is reset.
C. When the Spray Additive Tank low-low level setpoint is reached.
D. Anytime after the Containment Spray Actuation signal (CSAS) was received.

Question Number	043
Question	Initial conditions: • Wolf Creek is operating at 40% Reactor Power while performing a power ascension at 3% per hour. • Annunciator 106A, "Cond Hotwell Lev Lo-Lo" alarms. • The Lo-Lo level condition is verified on MCB indicator, AD LI-114. • All systems have responded normally. • No operator actions have been performed. Select from the following the appropriate response for this plant condition. A. Take control of and run the standby Main Feed pump speed to the High Speed Stop to restore S/G level. B. Manually start the Motor Driven Auxiliary Feedwater Pumps to regain level. C. Verify the Turbine trip and adjust control rods to maintain Tavg. D. Verify the Reactor trip.
Answer	D. Verify the Reactor trip.
Allowed references	None
LP and objective	SY1505600,Obj. 6
WCGS procedure - print references	ALR 00-106A "Cond Hotwell Level Lo Lo"
NRC KA Topic	056 A2.04 Ability to (a) predict the impacts of the following malfunctions or operations on the condensate system; and (b) based on those predictions, use procedures to correct, control, or mitigate the consequences of those malfunctions or operations: loss of condensate pumps.
NRC KA topic importance factors	2.6/2.8
NRC 1122 KA - 10CFR55 41/43 tie	41.5/43.5/45.3/45.13
NRC difficulty rating	Not Available
WCGS difficulty rating and explanation	A3 The candidate must know that the LOLO level alarm will trip all condensate pumps. This in turn will trip the both Main Feed pumps. The cumulative affect being that the reduction of Main Feed flow will cause the Steam Generator inventory to be depleted. This will result in the Reactor being tripped on a Low SG Level signal.
Distracter explanation and references	A. Incorrect - Both Main Feed Pumps will have tripped and suction pressure will have rapidly decreased. Credible if operator does not realize both MFPs have tripped due to the loss of the condensate pumps and tries to use the only pump with enough flowrate to mitigate his problem. B. Incorrect: - Aux feed pumps will automatically start on low SG level

	and the operator will not be required to start them. Credible in that when the reactor trips both Motor driven Aux feed pumps will start to regain level. C. Incorrect - The Turbine will trip but so will the reactor, so adjusting rods will have no affect. Credible in that the initial power level is below P-9 and the candidate may think that he will receive only a Turbine trip without the associated Reactor Trip. D. Correct - The loss of hotwell level will trip the condensate pumps. This will reduce the suction pressure to the main feed pumps. The S/G level will be lost and the reactor will trip.
NRC ES-401 Tier and section location	SRO: Tier 2 Group 1 RO: Tier 2 Group 2
Question original source	Modified Bank
Additional comments	NRC comment - If EMGs say ensure or verify then "B" could be correct. Add, no operator action to the stem. Answer - Revised distractor "B" to say manually start motor driven AFW pumps. Added a statement to the stem to state that no operator actions have been performed.

Question: 043

Initial conditions:

- Wolf Creek is operating at 40% Reactor Power while performing a power ascension at 3% per hour.
- Annunciator 106A, "Cond Hotwell Lev Lo Lo" alarms.
- The Lo-Lo level condition is verified on MCB indicator, AD LI-114.
- All systems have responded normally.
- No operator actions have been performed.

Select from the following the appropriate response for this plant condition.

A. Take control of and run the standby Main Feed pump speed to the High Speed Stop to restore S/G level.

B. Manually start the Motor Driven Auxiliary Feedwater Pumps to regain level.

C. Verify the Turbine trip and adjust control rods to maintain Tavg.

D. Verify the Reactor trip.

Question Number	044
Question	Wolf Creek is operating with the following conditions: • Reactor power 50% • 2 condensate pumps running • 2 circulating water pumps running • All other systems and components in automatic In this situation, which ONE of the following conditions would result in a trip of a main feedwater pump assuming no operator actions are taken? A. A Main feedpump discharge pressure switch fails high. B. A condensate pump trips on overcurrent C. A selected SG level channel fails low D. A heater drain pump trips on overcurrent
Answer	C
Allowed references	None
LP and objective	SY1505900, Rev. 004, Obj. 10, SY1505902, Rev. 003, Obj. 2
WCGS procedure - print references	M-12AE01, M-744-0024, M 744-00030
NRC KA Topic	059 K1.04 Knowledge of the physical connections and/or cause-effect relationships between the MFW and the following systems: SGs water level control system.
NRC KA topic importance factors	3.4/3.4
NRC 1122 KA - 10CFR55 41/43 tie	41.2 to 41.9/45.7/45.8
NRC difficulty rating	Not Available
WCGS difficulty rating and explanation	A3 - Higher Order Question. The candidate must look at existing plant conditions and determine how each of the distractor situations would affect the plant. A determination must then be made if this change in plant conditions would cause a main feedwater pump trip. The failure of the controlling S/G level channel low would cause the FRV to over feed the S/G resulting in a FWIS based on 2/4 S/G levels greater than 78%. The FWIS would trip the Main feedwater pumps.
Distracter explanation and references	A. Incorrect - This is a plausible distracter because a 2/3 failure of these pressure switches high will cause a main feedwater pump trip. B. Incorrect - This is a plausible distracter because a loss of all condensate pumps will cause a main feedwater pump trip. C. Correct - As the level channel selected for control fails low this will increase feedwater flow to the affected S/G. Level will increase to 78% which will give the FWIS. This will trip any running main feedwater pumps. D. Incorrect - This is a plausible distracter because a loss of all condensate

	pumps will cause a main feedwater pump trip. Confusion could exists on which pumps in the secondary system will generate the main feedwater pump trip.
NRC ES-401 Tier and section location	SRO: Tier 2 Group 1 RO: Tier - 2 Group 1
Question original source	Exam Bank
Additional comments	

Question: 044

Wolf Creek is operating with the following conditions:

- Reactor power 50%
- 2 condensate pumps running
- 2 circulating water pumps running
- All other systems and components in automatic

In this situation, which ONE of the following conditions would result in a trip of a main feedwater pump assuming no operator actions are taken?

A. A Main feedpump discharge pressure switch fails high.

B. A condensate pump trips on overcurrent

C. A selected SG level channel fails low

D. A heater drain pump trips on overcurrent

Question Number	045
Question	The heat transfer rate between the RCS and the S/Gs will: A. decrease as RCS temperature increases and AFW flow increases. B. decrease as AFW temperature decreases and RCS flow increases. C. increase as AFW temperature increases and RCS flow decreases. D. increase as RCS temperature increases and AFW flow increases.
Answer	D
Allowed references	None
LP and objective	PWR Generic Fundamentals Chapter 7 Thermodynamics
WCGS procedure - print references	N/A
NRC KA Topic	061 K1.03 Knowledge of the physical connections and/or cause-effect relationships between the AFW and the following systems: Main steam system.
NRC KA topic importance factors	3.5/3.9
NRC 1122 KA - 10CFR55 41/43 tie	41.2 to 41.9/45.7/45.8
NRC difficulty rating	Not Available
WCGS difficulty rating and explanation	K3 - Lower order question. The candidate must apply the stated plant parameters to heat transfer equations to determine which statement is correct.
Distracter explanation and references	A. Incorrect - This statement is incorrect because the increase in RCS temperature and the increase in AFW flow would increase the heat transfer rate. This is a plausible distracter because the candidate can easily confuse the different parameters affect on heat transfer rate. B. Incorrect - This statement is incorrect because a decrease in AFW temperature or an increase in AFW flow would increase the heat transfer rate. This is a plausible distracter because the candidate can easily confuse the different parameters affect on heat transfer rate. C. Incorrect - This statement is incorrect because an AFW temperature increase or a RCS flow decrease will decrease the heat transfer rate. This is a plausible distracter because the candidate can easily confuse the different parameters affect on heat transfer rate. D. Correct - The increase in RCS temperature and increase in AFW flow will increase the ΔT across the S/G tubes. The increase in ΔT with the overall heat transfer coefficient and cross sectional area of the S/Gs remaining the same will increase the BTUs/HR across the S/G.
NRC ES-401 Tier and section location	SRO: Tier 2 Group 1 RO: Tier - 2 Group 1
Question original source	Exam Bank

Question: 045

The heat transfer rate between the RCS and the S/Gs will:

A. decrease as RCS temperature increases and AFW flow increases.

B. decrease as AFW temperature decreases and RCS flow increases.

C. increase as AFW temperature increases and RCS flow decreases.

D. increase as RCS temperature increases and AFW flow increases.

Question Number	046
Question	The LS 6 Limit switch on FC HV-312 (Turbine Trip and Throttle Valve) has failed in the valve closed position. This limit switch feeds the actuation of the ramp generator. An automatic start signal for the TDAFWP occurs. The TDAFW pump: A. will not start B. will overspeed and trip C. will control at 1100 rpm D. will ramp up to Speed set on Speed controller
Answer	C
Allowed references	None
LP and objective	SY1406100, Obj. 4
WCGS procedure - print references	N/A
NRC KA Topic	061 2.1.28 Knowledge of the purpose and function of major system components and controls.
NRC KA topic importance factors	3.2/3.3
NRC 1122 KA - 10CFR55 41/43 tie	41.7
NRC difficulty rating	Not Available
WCGS difficulty rating and explanation	A4 - Higher order question. The Operator must know that the ramp generator is enabled by this limit switch going to the open position. He must also analyze the effects of the ramp generator failing to be brought into the control circuit. The governor valve will maintain its no-load setpoint of 1100 rpm without additional input from the controller. Normally the candidate would not be responsible for the function of limit switches but this circuit has been the source of numerous faults and has been specifically trained on.
Distracter explanation and references	A. Incorrect: The Turbine Trip Throttle Valve will open and supply steam to the turbine. Credible in that the operator may assume the Turbine Trip Throttle Valve stays closed so there will not be any admittance of steam to the Turbine. B. Incorrect: The turbine will settle out on the governor at 1100 rpm. Credible in that the candidate may assume that with the ramp generator not in the circuit that the speed will not be clamped and continue to speed up until the overspeed circuit trips the turbine. C. Correct - The governor valve will maintain its no-load setpoint of 1100 rpm without additional input from the controller. D. Incorrect: The turbine will not be able to reach the speed where the speed controller can pick it up due to the failure of the ramp generator. Credible in that this is the normal response to an autostart signal and the candidate may assume this is an indication only device.
NRC ES-401 Tier and section location	SRO: Tier 2 Group 1 RO: Tier 2 Group 1
Question original source	NEW
Additional comments	

Question 046

The LS 6 Limit switch on FC HV-312 (Turbine Trip and Throttle Valve) has failed in the valve closed position. This limit switch feeds the actuation of the ramp generator.

An automatic start signal for the TDAFWP occurs.

The TDAFW pump:

A. will not start

B. will overspeed and trip

C. will control at 1100 rpm

D. will ramp up to Speed set on Speed controller

Question Number	047
Question	Given the following: • The Unit was operating at 100% power with all systems normal. • The Normal Charging Pump is in service • A loss of NK01 has occurred. • While stabilizing the unit, a spurious SI occurred and has now been reset. Which of the following charging pump combinations will exist as a result of these conditions? NCP / "A" CCP / "B" CCP A. Running / Running / Running B. Running / Stopped / Running C. Stopped / Running / Stopped D. Running / Stopped / Stopped
Answer	B.
Allowed references	None
LP and objective	SY1300400, Rev. 9, Obj. 3
WCGS procedure - print references	E-13BG37,E-03BG01A,E-03BG01,E03NB15,E-03NB13
NRC KA Topic	063 K2.01 Knowledge of bus power supplies to the following: Major loads
NRC KA topic importance factors	2.9*/3.1*
NRC 1122 KA - 10CFR55 41/43 tie	41.7
NRC difficulty rating	Not Available
WCGS difficulty rating and explanation	A3 - Higher order question. The candidate must know the effects of a loss of the DC vital bus(loss of "A" sequencer and control power to NB01) and the expected actuations during a Safety Injection and its subsequent resetting. He must then analyze these to determine the correct configuration of charging pumps given these failures.
Distracter explanation and references	A. Incorrect: "A" CCP will not start due to lack of a start signal and loss of control power. Plausible in that the candidate may assume the battery picks up these loads (bus is 0 volts). B. Correct: The NCP does not receive a load shed signal and will continue to run. The "A" CCP will not have control power or a start signal due to failure of the sequencer control power. C. Incorrect: The NCP will be running. Plausible if one assumes non-vital loads are stripped. The CCP control power supplies are reversed. D. Incorrect: The "B" CCP will be running as it has control power and a start signal. Credible in that the SI reset may be confused with resetting equipment to original state.
NRC ES-401 Tier and section location	SRO: Tier 2 Group 1 RO: Tier 2 Group 2
Question original source	Modified Bank

Additional comments	

Question 047

Given the following:

- The Unit was operating at 100% power with all systems normal.
- The Normal Charging Pump is in service
- A loss of NK01 has occurred.
- While stabilizing the unit, a spurious SI occurred and has now been reset.

Which of the following charging pump combinations will exist as a result of these conditions?

	NCP	"A" CCP	"B" CCP
A.	Running	Running	Running
B.	Running	Stopped	Running
C.	Stopped	Running	Stopped
D.	Running	Stopped	Stopped

Question Number	048
Question	Loss of Vital DC bus NK01 coupled with a trip of NB01 normal feeder breaker will affect Diesel Generator NE01 in which one of the following ways? A. The diesel generator will start and load, but the fuel oil transfer pump will be deenergized and the diesel will stop when the day tank goes dry. B. The diesel generator will not start because the loss of power to the air start solenoids. C. The diesel generator will start but not load because NB01 DC control power has been lost. D. The diesel generator will not start because the shutdown sequencer has lost DC power and will not send a start signal.
Answer	B
Allowed references	None
LP and objective	SY1406400, Rev. 004, Obj. 5, 11
WCGS procedure - print references	E-13KJ01
NRC KA Topic	063 K3.01 Knowledge of the effect that a loss or malfunction of the DC electrical system will have on the following: ED/G.
NRC KA topic importance factors	3.7/4.1
NRC 1122 KA - 10CFR55 41/43 tie	41.7/45.6
NRC difficulty rating	Not Available
WCGS difficulty rating and explanation	K3 - Lower order question. The candidate must recall the control circuits for the D/G and the 4KV bus breakers. They then must apply a loss of NK01 and know what components receive power from there. This is considered a level 3 due to multiple systems control circuits.
Distracter explanation and references	A. Incorrect - The D/G does not start or load due to loss of control power to the 4.16KV bus breakers and loss of power to the air start solenoids. The fuel oil transfer pump is powered from NG03D (480V). This is a plausible because the D/G will get a start signal on the NB01 undervoltage. B. Correct - The loss of dc to the air start solenoids prevents air from routing to the air start valves. The diesel generator does not rotate so it does not start. C. Incorrect - The D/G will not start. It does not tie on the bus. The bus loads will not sequence on with the lost of control power for it breakers. This is a plausible distractor because the bus breakers would not close with loss of control power even with the D/G tied to the bus. D. Incorrect - The D/G start signals are from SIS, 4 KV bus undervoltage, or manual. It does not get a start signal from the sequencer. This is a plausible distractor because the shutdown sequencer gets a start signal from the D/G breaker closing.
NRC ES-401 Tier and section location	SRO: Tier 2 Group 1 RO: Tier - 2 Group 2

Question original source	Exam Bank
Additional comments	

Question 048

Loss of Vital DC bus NK01 coupled with a trip of NB01 normal feeder breaker will affect Diesel Generator NE01 in which one of the following ways?

A. The diesel generator will start and load, but the fuel oil transfer pump will be deenergized and the diesel will stop when the day tank goes dry.

B. The diesel generator will not start because the loss of power to the air start solenoids.

C. The diesel generator will start but not load because NB01 DC control power has been lost.

D. The diesel generator will not start because the shutdown sequencer has lost DC power and will not send a start signal.

Question Number	049
Question	A small LOCA has occurred and the following plant conditions exist: • RCS pressure is 1500 psig. • Containment pressure is 0.3 psig. • Maximum measured containment radiation level 50 mr/hr. Which one of the following flowpaths associated with the Reactor Coolant Drain Tank (RCDT) will receive an isolation signal as a result of these conditions? A. RCDT flowpaths should be unaffected. B. RCDT H2/Vent line. C. RCDT recirculation flow path. D. Refueling Pool drain path to RCDT.
Answer	B.
Allowed references	None
LP and objective	SY1406900, Rev. 002, Obj. 7
WCGS procedure - print references	M-12HB01
NRC KA Topic	068 A3.02 Ability to manually operate and/or monitor in the control room: automatic isolation.
NRC KA topic importance factors	3.6/3.6
NRC 1122 KA - 10CFR55 41/43 tie	41.7/45.5
NRC difficulty rating	Not available
WCGS difficulty rating and explanation	A2 - Higher order question. The candidate must analyze the existing parameters and determine that a SIS and Phase A isolation occurred at some point. This knowledge is then applied to the RCDT paths to determine how each is affected. This is a level 3 based on determining a safeguard signal has occurred and applying that to systems knowledge.
Distracter explanation and references	A. Incorrect - The RCDT has two flowpaths isolated by CISA. The H2/vent header and the RCDT pumps discharge header. This is a plausible distractor if the candidate only remembers the pump discharge header since it is not a choice. B. Correct - The H2/vent line isolates on a CISA. C. Incorrect - The RCDT recirculation path is located entirely inside containment and therefore is not an isolation path. This is a plausible distractor because it comes off a line that is isolated by the CISA but before the automatic isolation valves. D. Incorrect - The refueling pool drain is a manual valve and is not affected by automatic isolation signals. This is a plausible distractor because the RCDT return to the fuel pool cleanup filters is off a line isolated by CISA.
NRC ES-401 Tier and section location	SRO Tier 1 Group 3 RO: Tier 1 Group 3

Question original source	Exam Bank
Additional comments	

Question 049

A small LOCA has occurred and the following plant conditions exist:

- RCS pressure is 1500 psig.
- Containment pressure is 0.3 psig.
- Maximum measured containment radiation level 50 mr/hr.

Which one of the following flowpaths associated with the Reactor Coolant Drain Tank (RCDT) will receive an isolation signal as a result of these conditions?

A. RCDT flowpaths should be unaffected.

B. RCDT H2/Vent line.

C. RCDT recirculation flow path.

D. Refueling Pool drain path to RCDT.

Question Number	050
Question	The Waste Gas Decay system is monitored by the following instruments: • GH RE 10A - Radwaste Building Effluent Particulate and Iodine • GH RE 10B - Radwaste Building Effluent Wide Range Gas • GH RE 23 - Waste Gas Ventilation Exhaust A HiHi Alarm(s) on which one of the following will result in the automatic isolation of the Waste Gas Decay tank discharge from the Radwaste Building Ventilation Exhaust? A. Either GH RE 10A or GH RE 10B but not GH RE 23. B. Either GH RE 10A or GH RE 23, but not GH RE 10B. C. Either GH RE 10A, GH RE 10B, or GH RE 23. D. GH RE 23 only.
Answer	A
Allowed references	None
LP and objective	SY1407300, Rev. 002, Obj. 3
WCGS procedure - print references	M-12HA03
NRC KA Topic	071 A3.03 Ability to monitor automatic operation of the waste gas disposal system including: radiation monitoring system alarm and actuating signals.
NRC KA topic importance factors	3.6/3.8
NRC 1122 KA - 10CFR55 41/43 tie	41.7/45.5
NRC difficulty rating	Not Available
WCGS difficulty rating and explanation	K2 - Lower order question. The candidate must recall the automatic operation of multiple radiation monitors and apply that to isolation of the waste gas discharge path.
Distracter explanation and references	A. Correct - Radwaste building vent monitors GH RE-10A/10B will individually isolate HA HCV-14, the waste gas decay tank discharge. GH RE-23 only detects and alarms the presence of gaseous radioactivity. B. Incorrect - This is incorrect because either GH RE-10A or 10B will isolate HA HCV-14. This is plausible because GH RE-23 monitors the waste gas decay tank area. C. Incorrect - This is incorrect because GH RE-23 will not isolate the discharge path. This is plausible because GH RE-23 monitors the waste gas decay tank area. And the statement is partially correct by listing GH RE-10A and 10B. D. Incorrect - This is incorrect because GH RE-23 will not isolate the discharge path. This is plausible because GH RE-23 monitors the waste gas decay tank area.

NRC ES-401 Tier and section location	SRO: Tier 2 Group 1 RO: Tier 2 Group 1
Question original source	Wolf Creek Aug 97 NRC Exam
Additional comments	

Question: 50

The Waste Gas Decay system is monitored by the following instruments:

- GH RE 10A - Radwaste Building Effluent Particulate and Iodine
- GH RE 10B - Radwaste Building Effluent Wide Range Gas
- GH RE 23 - Waste Gas Ventilation Exhaust

A HiHi Alarm(s) on which one of the following will result in the automatic isolation of the Waste Gas Decay tank discharge from the Radwaste Building Ventilation Exhaust?

A. Either GH RE 10A or GH RE 10B but not GH RE 23.

B. Either GH RE 10A or GH RE 23, but not GH RE 10B.

C. Either GH RE 10A, GH RE 10B, or GH RE 23.

D. GH RE 23 only.

Question Number	051
Question	A RCS LOCA is in progress. Containment radiation levels are 110R/HR. Which of the following alarms will be generated by CHARMS on the Main Control Board? A. PROCESS RAD HI HI only B. PROCESS RAD HI HI And CTMT RAD HIGH C. AREA RAD HI HI only D. AREA RAD HI HI and CNMT RAD HIGH
Answer	B
Allowed references	None
LP and objective	SY1407300, Rev. 002, Obj. 3
WCGS procedure - print references	STS IC-460B, ALR 00-061A
NRC KA Topic	072 A4.02 Ability to manually operate and/or monitor in the control room: major components.
NRC KA topic importance factors	2.5/2.5
NRC 1122 KA - 10CFR55 41/43 tie	41.7/45.5 to 45.8
NRC difficulty rating	Not Available
WCGS difficulty rating and explanation	K2 - Lower order question. The candidate must recall that CHARMS is an area monitor that alarms as a process monitor.
Distracter explanation and references	A. Incorrect - CHARMS is an area radiation monitor but inputs to the PROCESS RAD HiHi annunciator on reaching the 100 R/HR level. This is a plausible distracter because CHARMS also activates annunciator, CMNT RAD HIGH, if readings reach 100 R/hr. B. Correct - CHARMS is an area radiation monitor but inputs to the PROCESS RAD HIHI and CTMT RAD HIGH annunciators on reaching the ALARM level. C. Incorrect - CHARMS is an area radiation monitor but inputs to the PROCESS RAD HIHI annunciator on reaching the ALARM level. This is a plausible distracter because it alarms as a process monitor but is actually an area monitor and confusion can exist on which annunciator is activated. D. Incorrect - CHARMS is an area radiation monitor but inputs to the PROCESS RAD HIHI annunciator on reaching the ALARM level. This is a plausible distracter since these are area monitors.
NRC ES-401 Tier and section location	SRO: Tier - 2 Group -1 RO: Tier 2 Group 1
Question original source	Modified Bank
Additional comments	

Question 051

A RCS LOCA is in progress. Containment radiation levels are 110R/HR. Which of the following alarms will be generated by CHARMS on the Main Control Board?

A. PROCESS RAD HIHI only

B. PROCESS RAD HIHI And CTMT RAD HIGH

C. AREA RAD HIHI only

D. AREA RAD HIHI and CNMT RAD HIGH

Question Number	052
Question	The Operator Crew is performing ES-04 "Natural Circulation Cooldown". The following values are current conditions: • # OF CRDM Fans Running 4 • WR Hot Leg 1 Temp 488°F • WR Cold Leg 1 Temp 465°F • WR Cold Leg 2 Temp 470°F • Core Exit Thermocouples 492°F • RCS Pressure 731 psia • Pressurizer Pressure 705 psia What would be the displayed value for RCS Subcooling Margin? A. 12°F B. 16°F C. 20°F D. 38°F
Answer	A
Allowed references	Steam Tables
LP and objective	SY1300202, Rev. 005 Obj. 4, Steam Tables
WCGS procedure - print references	None
NRC KA Topic	002 K5.17 Knowledge of the operational implications of the following concepts as they apply to the RCS: need for monitoring in-core thermocouples during natural circulation.
NRC KA topic importance factors	3.8/4.2
NRC 1122 KA - 10CFR55 41/43 tie	41.5/45.7
NRC difficulty rating	Not Available
WCGS difficulty rating and explanation	A3 - Higher Order Question. The candidate must look at the existing parameters and determine which ones would be feeding the subcooling monitor calculation. This information must then be applied to the steam tables to calculate the value of subcooling.
Distracter explanation and references	A. Correct - This answer is based on the subcooling monitor reading the highest temperature (CETs) and the lowest pressure (Pressurizer). The saturation temperature for 705 psia is 504°F. The highest temperature parameter is 492°F. This gives 12°F subcooling. B. Incorrect - This answer is incorrect because it uses RCS pressure of 731 psia. This is a plausible distracter because it is a feed to the subcooling

	monitor. C. Incorrect - This answer is incorrect because it uses RCS pressure of 731 psia and the WR hot leg temperature of 488°F. This is a plausible distracter because both feed the subcooling monitor. D. Incorrect - This answer is incorrect because it uses RCS pressure of 731 psia and the WR cold leg 2 temperature of 470°F. This is a plausible distracter because both feed the subcooling monitor.
NRC ES-401 Tier and section location	SRO Tier 2 Group 2 RO: Tier 2 Group 2
Question original source	Modified Bank
Additional comments	

Question 052:

The following values are read for RCS parameters during the performance of ES-04 "Natural Circulation Cooldown".

- # OF CRDM Fans Running 4
- WR Hot Leg 1 Temp 488°F
- WR Cold Leg 1 Temp 465°F
- WR Cold Leg 2 Temp 470°F
- Core Exit Thermocouples 492°F
- RCS Pressure 731 psia
- Pressurizer Pressure 705 psia

What would be the displayed value for RCS Subcooling Margin?

A. 12°F

B. 16°F

C. 20°F

D. 38°F

Question Number	053
Question	Following a loss of offsite power and a NB01 bus lockout which of the pressurizer heater groups will be available to maintain PZR pressure? A. Variable heaters B. Backup heater group A C. Backup heater group B D. All backup heater groups only
Answer	C
Allowed references	None
LP and objective	SY1301000, Rev 002, Obj. 7
WCGS procedure - print references	E-11005
NRC KA Topic	011 K2.02 Knowledge of bus power supplies to the following: PZR heaters.
NRC KA topic importance factors	3.1/3.2
NRC 1122 KA - 10CFR55 41/43 tie	41.7
NRC difficulty rating	Not Available
WCGS difficulty rating and explanation	K3 - Lower order question. The candidate must recall multiple items of electrical knowledge including where each heater is powered from, the affect of a loss of offsite power on that source, and the affect of the NB01 lockout on that source.
Distracter explanation and references	A. Incorrect - The variable heaters are powered from PG24 which looses power during a loss of offsite power. This is a plausible distractor because the candidate can confuse which bus feeds these heaters and if that bus may be powered from the D/G. B. Incorrect - The group A backup heaters are powered from PG21 which looses power due to the loss of offsite power. PG21 is powered from D/G NE01 but remains de-energized due to the NB01 lockout. This is a plausible distractor because the candidate can confuse which bus feeds these heaters and if that bus may be powered from the D/G. C. Correct - The group B backup heaters are powered from PG22 which looses power due to the loss of offsite power. PG22 is powered from D/G NE02. These group of heaters is available for use after the D/G is tied to NB02.. D. Incorrect - Group A is not available due to the NB01 lockout. This is a plausible distractor because the candidate can confuse which bus feeds these heaters and if that bus may be powered from the D/G. Group B is available after D/G NE02 ties on the bus.
NRC ES-401 Tier and section location	SRO: Tier 2 Group 2 RO: Tier 2 Group 2
Question original source	Modified Bank
Additional comments	

Question 053

Following a loss of offsite power and a NB01 bus lockout which of the pressurizer heater groups will be available to maintain PZR pressure?

A. Variable heaters

B. Backup heater group A

C. Backup heater group B

D. All backup heater groups only

Question Number	054
Question	The operators are performing a heatup and startup of the plant following an outage. Which one of the below will unblock the automatic low PZR pressure SI signal? A. When 2 out of 3 PZR pressure channels are greater than the P-11 setpoint of 1970 psig. B. When 3 out of 4 PZR pressure channels are greater than the auto SI setpoint of 1830 psig. C. When the control room operator manually unblocks the signal as directed in the heatup/startup procedure. D. When both reactor trip breakers are closed, removing the SI blocking feature provided by the P-4 interlock.
Answer	A. When 2 out of 3 PZR pressure channels are greater than the P-11 setpoint of 1970 psig.
Allowed references	None
LP and objective	SY1301301, Rev. 000, Obj. 3
WCGS procedure - print references	M-744-00023
NRC KA Topic	012 K6.04 Knowledge of the effect of a loss or malfunction of the following will have on the RPS: bypass-block circuits.
NRC KA topic importance factors	3.3/3.6
NRC 1122 KA - 10CFR55 41/43 tie	41.7/45.7
NRC difficulty rating	Not Available
WCGS difficulty rating and explanation	K3 - Lower order question. The candidate must recall the low PZR pressure SIS and its associated block circuit.
Distracter explanation and references	A. Correct - Two channels > 1970 psig will remove the P-11 low pressurizer pressure SI block. The unit will get the safety injection if 2/4 PZR pressure channels fall below 1830 psig. B. Incorrect - Pressurizer low pressure SI signal is removed when 3 / 4 pressure channels are above 1830 psig. This does not effect the P-11 portion of the circuit. This is a plausible distractor because it does remove the 1830 psig signal. C. Incorrect - This block removal is done automatically as the unit heats up. The operator is not instructed to remove the block but verifies it resets automatically at 1970 psig. This is a plausible distractor because

	the capability does exist to reset the P-11 block. D. Incorrect - The reactor trip breaker P-4 contacts are not part of the PZR low pressure SI block circuit. P-4 contacts do prevent any automatic SI signals after a SIS has been manually reset. This lasts until the reactor trip breakers are closed. This is a plausible distractor because closing the breakers does remove the automatic SI block if it has been previously manually blocked.
NRC ES-401 Tier and section location	SRO: Tier 2 Group 2 RO: Tier - 2 Group 2
Question original source	Modified Bank
Additional comments	NRC comment - First paragraph is unnecessary. Answer - Removed first paragraph. Redundant information.

Question: 054

The operators are performing a heatup and startup of the plant following an outage.

Which one of the below will unblock the automatic low PZR pressure SI signal?

A. When 2 out of 3 PZR pressure channels are greater than the P-11 setpoint of 1970 psig.

B. When 3 out of 4 PZR pressure channels are greater than the auto SI setpoint of 1830 psig.

C. When the control room operator manually unblocks the signal as directed in the heatup/startup procedure.

D. When both reactor trip breakers are closed, removing the SI blocking feature provided by the P-4 interlock.

Question Number	055
Question	Wolf Creek is currently at 60% Reactor Power. • Rods are in Automatic. • Bank "D" Rods are at 120 steps. • Turbine Load is increasing at 1% per hour. • Loop 1 Narrow Range cold leg instrument has just failed low. Which one of the following is a plant response to the failure? A. Control rods step in to decrease Tavg to match Tref. B. Control rods step out to increase Tavg to match Tref. C. Rod insertion limit increases from 70 to 161 steps on Control Bank D. D. Rod insertion limit decreases from 70 to 0 steps on Control Bank D.
Answer	C.
Allowed references	None
LP and objective	SY1300202, Rev. 005, Obj. 1, COLR, SY1301400,Obj. 9
WCGS procedure - print references	None
NRC KA Topic	016 A3.01 Ability to monitor automatic operation of the NNIS, including: automatic selection of NNIS inputs to control systems.
NRC KA topic importance factors	2.9/2.9
NRC 1122 KA - 10CFR55 41/43 tie	41.7/45.5
NRC difficulty rating	Not Available
WCGS difficulty rating and explanation	A3 - Higher order question. The candidate must determine how a RTD failing low will effect the Tavg and ΔT circuits. Determination is then made as to how the changes in Tavg and ΔT will effect the rod control system and the RIL computer.
Distracter explanation and references	A. Incorrect - This failure will cause a decrease in Loop 1 Tavg. This is a plausible distracter because rod motion is common during RTD failures. B. Incorrect - This failure will cause a decrease in loop 1 Tavg. This is a plausible distracter in that the candidate may select the rods stepping out to increase the Tavg. C. Correct - This will decrease loop 1 Tavg and increase loop 1 ΔT. The increased ΔT will be seen as the auctioneered high signal by the RIL monitor. This will raise the rod insertion limit to 161 steps on Control Bank D. D. Incorrect - This will decrease loop 1 Tavg and increase loop 1 ΔT. The increased ΔT will be seen as the auctioneered high signal by the RIL monitor. This is a plausible distracter because it is easy to confuse the direction of RIL insertion limit change.
NRC ES-401 Tier and section location	SRO: Tier 2 Group 2 RO: Tier - 2 Group 2

Question original source	New
Additional comments	NRC comment - Added the mode the Rod Control System is in and information about the position of bank D rods.

Question 055

Wolf Creek is currently at 60% Reactor Power.

- Rods are in Automatic.
- Bank "D" Rods are at 120 steps.
- Turbine Load is increasing at 1% per hour.
- Loop 1 Narrow Range cold leg instrument has just failed low.

Which one of the following is a plant response to the failure?

A. Control rods step in to decrease Tavg to match Tref.

B. Control rods step out to increase Tavg to match Tref.

C. Rod insertion limit increases from 70 to 161 steps on Control Bank D.

D. Rod insertion limit decreases from 70 to 0 steps on Control Bank D.

Question Number	056
Question	A Large Break LOCA has occurred. Hydrogen concentration in Containment has reached the level required to place the Hydrogen Recombiners in service. Given: • Pre-LOCA containment Temperature 90°F • Present Containment Pressure 5.3 psig. • Present Containment Temperature 227°F • Reference Power Value 45.86 • Recombiner Power Setting = Pressure Factor (cp) x Reference Power Which one of the following is the correct power setting for the recombiner? A. 55.0 kW B. 56.2 kW C. 57.8 kW D. 59.6 kW
Answer	C. 57.8 kW
Allowed references	SYS GS-120 "Post LOCA Containment Hydrogen Recombiner Operation" Figure 1
LP and objective	SY 1302800, Obj. 5
WCGS procedure - print references	EMG E-1, Step 32, BD EMG-E1, SYS GS-120
NRC KA Topic	028 K5.02 Knowledge of the operational implications of the following concepts as the apply to the HRPS: flammable hydrogen concentration.
NRC KA topic importance factors	3.4/3.9
NRC 1122 KA - 10CFR55 41/43 tie	41.4/45.7
NRC difficulty rating	Not Available
WCGS difficulty rating and explanation	A2 - The candidate must be able to analyze present containment conditions, use a graph and a calculation to arrive at the correct result.
Distracter explanation and references	A. Incorrect: Based on 120°F curve. Credible in that this is a correct setting if this curve were to be used. B. Incorrect - This answer is based on atmospheric pressure at 90°F. Credible in that this is the lowest value that can be used assuming the

	required conversion to psia is not noticed. C. Correct: This answer is derived by using Figure 1 to determine the Containment pressure correction. This is done selecting the proper curve based on initial containment temperature and current Containment pressure then using the supplied formula to calculate the required Power Setting. D. Incorrect: Based on 60°F curve. Credible in that this is a correct setting if this curve were to be used.
NRC ES-401 Tier and section location	SRO: Tier 2 Group 2 RO: Tier - 2 Group 2
Question original source	Bank (Comanche Peak NRC Exam 1998)
Additional comments	NRC comment - Does not discriminate. Answer - Replaced the question.

Question: 056

A Large Break LOCA has occurred. Hydrogen concentration in Containment has reached the level required to place the Hydrogen Recombiners in service.

Given:

- Pre-LOCA containment Temperature 90°F
- Present Containment Pressure 5.3 psig.
- Present Containment Temperature 227°F
- Reference Power Value 45.86
- Recombiner Power Setting = Pressure Factor (cp) x Reference Power

Which one of the following is the correct power setting for the recombiner?

A. 55.0 kW

B. 56.2 kW

C. 57.8 kW

D. 59.6 kW

Question Number	057
Question	Which of the following is the <u>least</u> preferred source of makeup to the Spent Fuel Pool? A. Reactor Make-Up Water System. B. Recycle Holdup Tanks. C. Refueling Water Storage Tank. D. Essential Service Water.
Answer	D. Essential Service Water.
Allowed references	None
LP and objective	SY1403300, Obj. 2
WCGS procedure - print references	M-12BL01, M-12HE01, M-12BN01, M-12EF02
NRC KA Topic	033 A2.03 Ability to (a) predict the impacts of the following malfunctions or operations on the spent fuel pool cooling system; and (b) based on those predictions, use procedures to correct, control, or mitigate the consequences of those malfunctions or operations: abnormal spent fuel pool water level or loss of water level.
NRC KA topic importance factors	3.1/3.5
NRC 1122 KA - 10CFR55 41/43 tie	41.5/43.5/45.3/45.13
NRC difficulty rating	Not Available
WCGS difficulty rating and explanation	K2 - Lower order question. The candidate must recall the possible makeup sources to the spent fuel pool and determine the hierarchy of the source water to be used.
Distracter explanation and references	A. Incorrect: This is the preferred source of water to the Spent Fuel Pool. Credible in that this is a feasible source of water to the Spent Fuel Pool. B. Incorrect - This is a source of water to the Spent Fuel Pool. Credible in that this is a feasible source of water to the Spent Fuel Pool. C. Incorrect. This is a source of water to the Spent Fuel Pool. Credible in that this is a feasible source of water to the Spent Fuel Pool. D. Correct: ESW should not be used except when boiling is imminent within 4 hours.
NRC ES-401 Tier and section location	SRO: Tier 2 Group 2 RO: Tier - 2 Group 2
Question original source	SONGS 99
Additional comments	NRC comment - Does not discriminate. Answer - Replaced the question.

Question: 057

Which of the following is the least preferred source of makeup to the Spent Fuel Pool?

A. Reactor Make-Up Water System.

B. Recycle Holdup Tanks.

C. Refueling Water Storage Tank.

D. Essential Service Water.

Question Number	058
Question	Which one of the following manipulator crane features prevents dropping a fuel assembly? A. Load cell circuits. B. Gripper engage/disengage interlock. C. Traverse interlock. D. Slack cable interlock.
Answer	B. Gripper engage/disengage interlock.
Allowed references	None
LP and objective	SY1403400, Obj. 3
WCGS procedure - print references	FHP 03-001
NRC KA Topic	034 K4.01 Knowledge of the design feature(s) and/or interlock(s) which provide for the following: fuel protection from binding and dropping.
NRC KA topic importance factors	2.6/3.4
NRC 1122 KA - 10CFR55 41/43 tie	41.7
NRC difficulty rating	Not Available
WCGS difficulty rating and explanation	K2 - Lower order question. The candidate must recall the manipulator crane interlocks and determine which one prevents lifting with excessive force.
Distracter explanation and references	A. Incorrect - Load cell circuits prevent the assemblies from being raised with excessive force. Credible in that this is an active interlock on the Refueling Machine. B. Correct: This interlock prevents the gripper from disengaging the fuel assembly unless the assembly is Full Down and supported by an indication of a slack cable. C. Incorrect: This interlock prevents motion of the Refueling Machine with an assembly not in the Full Up position. Credible in that this is an active interlock on the Refueling Machine. D. Incorrect - Stops the hoist and prevents further lowering if load is less than the mast and winch platform weight by 200 lbs. This is a plausible distracter because it is a manipulator crane interlock. interlock
NRC ES-401 Tier and section location	SRO: Tier 2 Group 2 RO: Tier - 2 Group 3
Question original source	Exam Bank
Additional comments	NRC comment - Similar to question 32. Answer - Changed from raising with excessive force due to similarity

	with Question 32.

Question: 058

Which one of the following manipulator crane features prevents dropping a fuel assembly?

A. Load cell circuits.

B. Gripper engage/disengage interlock.

C. Traverse interlock.

D. Slack cable interlock.

Question Number	059
Question	A power ascension from 60 to 100 % power has just been completed when annunciator 061B, "PROCESS RAD HI", alarms. The following conditions exist: • GT RE-92, Condenser Air Removal monitor, is in alert, the increase occurred over the past hour. • SJ RE-01, CVCS Letdown Monitor, increased ≈10% during the power up ramp. • BM RE-25 and SJ RE-02, SG Blowdown Monitors, have increased over the past hour but have not alarmed. • SG levels and feedflows have remained constant. • Pressurizer level, charging and letdown show no change The probable cause of the increased reading on GT RE-92 is: A. S/G Tube Rupture. B. S/G Tube leak C. Crud burst D. Monitor failure
Answer	B
Allowed references	N/A
LP and objective	LO1610500, Rev.006, Obj. 3, LO1732422, Rev.11, Obj. 1, 2, 3, & 4
WCGS procedure - print references	OFN BB-007, AP 15C-003, BD EMG E-0
NRC KA Topic	035 000 A4.08 - Ability to manually operate and/or monitor in the control room: Recognition that increasing radiation levels in secondary systems may mean leaking and possibly ruptured S/G tubes.
NRC KA topic importance factors	4.1 / 4.4
NRC 1122 KA - 10CFR55 41/43 tie	41.7/45.6 - 45.8
NRC difficulty rating	N/A
WCGS difficulty rating and explanation	A- 3 - Higher order question. The candidate must analyze the existing parameters and determine that there is a primary to secondary leak. This information is then evaluated to define the size of the leak, rupture versus leak.
Distracter explanation and references	A. Incorrect - A SGTR is defined as > capacity of 1 CCP such that SI is or was required to maintain inventory, Pzr level & charging/makeup have not changed. This is a plausible distracter because the parameters are consistent for a primary to secondary leak. B. Correct - A SG tube leak is in progress as indicated by GT RE-92 going into alert, and the increase in BM RE-25 and SJ RE-02, since all three are trending together a failure is unlikely. This is a leak not a rupture because of pressurizer level and charging flow showing no change. There is also no steam flow/feed flow mismatch. C. Incorrect - A crud burst may have occurred, but it would not cause GT RE-092 to increase unless there was SG tube leakage. This is a plausible distracter because this would cause a letdown monitor increase. D. Incorrect - The increase in BM RE-25 and SJ RE-02 indicate that activity is increasing in the secondary side which substantiates GT RE-92 indication. This is a plausible distracter because a monitor failure can cause an alert reading.

NRC ES-401 Tier and section location	RO: Tier - 2 Group 2 SRO: Tier 2 Group 2
Question original source	Wolf Creek Feb. 1998 NRC Exam
Additional comments	

Question 059

A power ascension from 60 to 100 % power has just been completed when annunciator 061B, "PROCESS RAD HI", alarms.

The following conditions exist:

- GT RE-92, Condenser Air Removal monitor, is in alert, the increase occurred over the past hour.
- SJ RE-01, CVCS Letdown Monitor, increased ≈10% during the power up ramp.
- BM RE-25 and SJ RE-02, SG Blowdown Monitors, have increased over the past hour but have not alarmed.
- SG levels and feedflows have remained constant.
- Pressurizer level, charging and letdown show no change

The probable cause of the increased reading on GT RE-92 is:

A. S/G Tube Rupture.

B. S/G Tube leak

C. Crud burst

D. Monitor failure

Question Number	060
Question	RCS pressure is at 2140 psig and the operators are responding to a Steam Generator Tube Rupture and have entered EMG E-3 "Steam Generator Tube Rupture". Which of the following conditions occurring prior to the initiation of the RCS cooldown step in EMG E-3 would require the use of the SG ARVs to perform the cooldown? A. CISA has occurred B. Steamline pressure lowering to 525 psig C. Containment pressure increasing to 3.5 psig D. A drop in steam pressure rate from 1000 psig to 900 psig over a 50 second time period
Answer	B
Allowed references	None
LP and objective	SY1301301, Rev.000, Obj. 3
WCGS procedure - print references	EMG E-3
NRC KA Topic	039 K4.05 Knowledge of MRSS design feature(s) and/or interlock(s) which provide for the following: automatic isolation of steam line.
NRC KA topic importance factors	3.7/3.7
NRC 1122 KA - 10CFR55 41/43 tie	41.7
NRC difficulty rating	N/A
WCGS difficulty rating and explanation	A3 - Higher order question. The candidate must look at existing plant conditions and determine that only a MSLIS would require use of the S/G ARVs for cooldown. With parameters listed, P-11 has not been blocked so only a steamline pressure of < 615 psig would give a MSLIS.
Distracter explanation and references	A. Incorrect - The CSIA does not close the MSIVs. It is a plausible distracter because it is a containment isolation signal. B. Correct - If 2/3 PTs on 1/ 4 steamline is less than 615 psig and P-11 is not blocked, then a MSLIS occurs. C. Incorrect - Containment pressure will give a MSLIS but the setpoint is 17 psig. This is a plausible distracter because the SIS setpoint is 3.5 psig. D. Incorrect - Steamline rate will give a MSLIS after P-11 has been blocked. The setpoint is 100 psig decrease in 50 seconds. This is a plausible distracter because it would give a MSLIS except for P-11 not being blocked.
NRC ES-401 Tier and section location	SRO: Tier 2 Group 2 RO: Tier 2 Group 2
Question original source	Modified Exam Bank
Additional comments	

Question 060

RCS pressure is at 2140 psig and the operators are responding to a Steam Generator Tube Rupture and have entered EMG E-3 "Steam Generator Tube Rupture".

Which of the following conditions occurring prior to the initiation of the RCS cooldown step in EMG E-3 would require the use of the SG ARVs to perform the cooldown?

A. CISA has occurred

B. Steamline pressure lowering to 525 psig

C. Containment pressure increasing to 3.5 psig

D. A drop in steam pressure rate from 1000 psig to 900 psig over a 50 second time period

Question Number	061
Question	A Steam Generator Tube Leak is in progress. The Operators are commencing a Unit Shutdown to comply with Tech Specs due to excessive leakage. The operator notices the following conditions • Blowdown flow is isolated • Blowdown Sampling is isolated • BM FV 54 is open (Discharge valve to Environment) • Condenser Vacuum pumps are running Which of the following could cause the above symptoms? A. GE RE 92 Condenser Air Discharge Monitor in HI HI alarm B. BM RE 25 Steam Generator Process Monitor in HI HI alarm C. GT RE21B Unit Vent Monitor in HI alarm D. Safety Injection Signal
Answer	A. GE RE 92 Condenser Air Discharge Monitor in HI HI alarm
Allowed references	NONE
LP and objective	SY1407300, Rev 2 Obj. 3
WCGS procedure - print references	M-12CG01 CONDENSER AIR REMOVAL, M-12GE02 TURBINE BUILDING HVAC
NRC KA Topic	055 K1.06 Knowledge of the physical connections and/or cause effect relationship between the CARS and the following systems: PRM system
NRC KA topic importance factors	2.6/2.6
NRC 1122 KA - 10CFR55 41/43 tie	41.2 to 41.9/45.7 to 45.8
NRC difficulty rating	Not Available
WCGS difficulty rating and explanation	K3 The operator must distinguish between 3 different items to come up with the right combination of cause and effect relationships.
Distracter explanation and references	A. Correct As this monitor will, when in HI HI, isolate only blowdown through the BSPIS (Blowdown System Process Isolation Signal). B. Incorrect: This monitor will close the BM FV 54 when in HI HI alarm. Credible in that it would be elevated during a SGTR and isolates blowdown in addition to the BM FV 54. C. Incorrect: This monitor measures Unit Vent flow and does not affect blowdown but instead causes GT RE 21A to enter Accident Isolate Mode. Credible in that it measures Plant Vent Flow which could be elevated during a SGTR and does cause a plant actuation when in alarm. D. Incorrect: This signal isolates blowdown but will also secure the Condenser Air removal pumps. Credible in that it occurs during a SGTR and also isolates blowdown.
NRC ES-401 Tier and section location	SRO: Tier 2 Group 1 RO Tier 2 Group 2
Question original source	NEW
Additional comments	

Question 061

A Steam Generator Tube Leak is in progress. The Operators are commencing a Unit Shutdown to comply with Tech Specs due to excessive leakage. The operator notices the following conditions

Blowdown flow is isolated
Blowdown Sampling is isolated
BM FV 54 is open
Condenser Vacuum pumps are running

Which of the following could cause the above symptoms?

A. GE RE 92 Condenser Air Discharge Monitor in HI HI alarm

B. BM RE 25 Steam Generator Process Monitor in HI HI alarm

C. GT RE21B Unit Vent Monitor in HI alarm

D. Safety Injection Signal

Question Number	062
Question	A Timed OverCurrent (TOC) condition on the ESF transformer has occurred resulting in a bus lockout of NB01. The initiating signal has cleared and the operators are attempting to close the normal feeder breaker. The breaker will: A. close and then reopen when the 152/TC energizes. B. close in local after bypassing the 152STA/a contact. C. not close due to the 186/F relay still being energized. D. not close as the 186/F relay is mechanically latched.
Answer	D. not close as the 186/F relay is mechanically latched.
Allowed references	E-03NB12 NB01 Feeder Breaker Schematic Diagram
LP and objective	SY1506205, Objective 4
WCGS procedure - print references	E-03NB12
NRC KA Topic	062 K4.01 Knowledge of AC distribution system design features and or interlocks which provide for the following: Bus Lockouts.
NRC KA topic importance factors	2.6/3.2
NRC 1122 KA - 10CFR55 41/43 tie	41.7
NRC difficulty rating	Not Available
WCGS difficulty rating and explanation	K3 The operator must recognize that the bus lockouts are mechanically latched in addition to electrical interlocks.
Distracter explanation and references	A. Incorrect: as the trip coil is continually energized the breaker will not attempt to close. Credible if the operator believes if the condition clears the lockout will also. B. Incorrect: while the Local Operation will bypass the 152STA/a contact the 186/F/b contact will remain open preventing closure. Credible in that the LOCAL switch bypasses most of the closure interlocks except for the lockout relays. C. Incorrect: the 186/F is de-energized after it has latched in the energized position. However all the contacts remain in the energized position. Credible in that the operator must understand that the 186/F relay will deenergize after actuation but remain in the energized position due to the mechanical latching. D. Correct: the 186/F relay mechanically latches when in the energized position and must be physically reset at the relay itself.
NRC ES-401 Tier and section location	SRO: Tier 2 Group 2RO: Tier 2 Group 2
Question original source	NEW

Additional comments	NRC comment - C & D are essentially the same. Answer - Changed distractor C slightly and distractor D wording.

Question: 062

A Timed OverCurrent (TOC) condition on the ESF transformer has occurred resulting in a bus lockout of NB01. The initiating signal has cleared and the operators are attempting to close the normal feeder breaker.

The breaker will:

A. close and then reopen when the 152/TC energizes.

B. close in local after bypassing the 152STA/a contact.

C. not close due to the 186/F relay still being energized.

D. not close as the 186/F relay is mechanically latched.

Question Number	063
Question	A Large Break LOCA has occured coincident with an undervoltage condition on NB01. The DG starts but the breaker does not automatically close. The SI is reset prior to the DG breaker being manually shut. The following plant conditions are present when the DG breaker is being closed. • Containment Pressure is 28 psig • RCS Pressure is 1100 psig • PZR Level is 0% Select from the following the correct state of the Containment Spray System after the DG breaker is shut: A. Containment Spray pump is running, EN HV6 Containment Spray Nozzle Isolation Valve open B. Containment Spray pump is running , EN HV6 Containment Spray Nozzle Isolation Valve is closed C. Containment Spray pump is not running, EN HV6 Containment Spray Nozzle Isolation Valve is open D. Containment Spray pump is not running, EN HV6 Containment Spray Nozzle Isolation Valve is closed
Answer	A. Containment Spray pump is running, EN HV6 Containment Spray Nozzle Isolation Valve open
Allowed references	None
LP and objective	SY1301301 Obj. 4
WCGS procedure - print references	E12NF01 & 10466-M-744-0025-05
NRC KA Topic	063 K3.01 Knowledge of the effect that a loss or malfunction of the ED/G will have on the following: Systems controlled by automatic loader.
NRC KA topic importance factors	3.8*/4.1
NRC 1122 KA - 10CFR55 41/43 tie	41.7/45.6
NRC difficulty rating	Not Available
WCGS difficulty rating and explanation	A3 The Operator must recognize that (1) the setpoint for a Containment Spray actuation(CSAS) is present (2) when the Diesel Breaker closes and with a CSAS present the Containment Spray pumps will start and the discharge valve will open (3) resetting the Safety Injection signal has no effect on the CSAS signal (4) the CSAS signal will also start the LOCA sequencer vice the Shutdown sequencer (for the undervoltage condition) as would have the SI signal which is know reset. He must take the multiple initial conditions and determine an effect on the Containment Spray System valves and Pumps. The two are separated in the answer because they receive separate actuation signals which increases the level of difficulty in discriminating the correct response. The valves receive their signal directly from the CSAS but the pumps need a signal from the LOCA sequencer.
Distracter explanation and references	A. Correct B. Incorrect: The Isolation valve will open on a Containment Spray Actuation: Credible in that the Spray pump will be running. The Operator

	may confuse resetting SI with resetting the CSAS signal so there would be no valve movement. The output relays are different for the sequencer and the valves so it is credible that one may actuate without the other. C. Incorrect: The discharge valve EN HV6 will open on a CSAS signal and after the Diesel powers up the bus the valve will open however the Containment Spray Pump will also be running. Credible if student believes that with the SI signal reset and an Undervoltage condition in effect the Shutdown sequencer will be utilized so the Containment Spray pump will not be running and must be started manually. There are many NOTES in the EMG network stating after SI reset that if a blackout occurs loads will have to be manually started. D. Incorrect: Both Spray pump and valve will be open. Credible if the student believes that the SI signal being reset will prevent actuation.
NRC ES-401 Tier and section location	SRO: Tier 2 Group 2 RO: Tier 2 Group 2
Question original source	NEW
Additional comments	

Question 063

A Large Break LOCA has occurred coincident with an undervoltage condition on NB01. The DG starts but the breaker does not automatically close. The SI is reset prior to the DG breaker being manually shut.

The following plant conditions are present when the DG breaker is being closed.

Containment Pressure is 28 psig
RCS Pressure is 1100 psig
PZR Level is 0%

Select from the following the correct state of the Containment Spray System after the DG breaker is shut:

A. Containment Spray pump is running, EN HV6 Containment Spray Nozzle Isolation Valve open

B. Containment Spray pump is running , EN HV6 Containment Spray Nozzle Isolation Valve is closed

C. Containment Spray pump is not running, EN HV6 Containment Spray Nozzle Isolation Valve is open

D. Containment Spray pump is not running, EN HV6 Containment Spray Nozzle Isolation Valve is closed

Question Number	064
Question	Which one of the following signals will result in the automatic isolation of both the Shutdown Purge and Mini-Purge CTMT isolation valves? A. Containment Isolation Signal Phase "B". B. Either High Containment Purge gaseous or particulate radiation. C. Either High Containment Atmosphere gaseous radiation or High Containment Purge gaseous radiation. D. Either High Containment Purge gaseous or particulate radiation or High Containment Atmosphere gaseous or particulate radiation.
Answer	C. Either High Containment Atmosphere gaseous radiation or High Containment Purge gaseous radiation.
Allowed references	None
LP and objective	SY1302800 and SY 1407300
WCGS procedure - print references	Containment Mini Purge System Operations SYS GT-120 & Containment Shutdown Purge System Operation SYS GT-121
NRC KA Topic	029 2.1.32 Ability to explain and apply all system limits and precautions.
NRC KA topic importance factors	3.4/3.8
NRC 1122 KA - 10CFR55 41/43 tie	41.10/43.2/45.12
NRC difficulty rating	Not Available
WCGS difficulty rating and explanation	K3 This is a memory item taken from the System Precaution and Limitations for the Mini-Purge and Shutdown Purge System Operations.
Distracter explanation and references	A. Incorrect: Phase "A" will give an isolation signal not the Phase "B". Credible in that Phase "B" is the last and final Containment Isolation signal and the candidate may assume that an isolation signal will occur from this initiating event. B. Incorrect: The isolation occurs from the gaseous instrument only and not the particulate. Credible in that the student must differentiate between the two sampling methods to arrive at the correct answer. C. Correct. Either of these two instruments will initiate the signal. D. Incorrect: Particulate monitors will not initiate an isolation signal. Credible in that the gaseous monitors will initiate the isolation signal.
NRC ES-401 Tier and section location	SRO: Tier 2 Group 2 RO: Tier 2 Group 2
Question original source	Modified Bank
Additional comments	NRC comment - Job content flaw, minutia. Answer - Replaced the question. Added CTMT to clarify valves.

Question: 064

Which one of the following signals will result in the automatic isolation of both the Shutdown Purge and Mini-Purge CTMT isolation valves?

A. Containment Isolation Signal Phase "B".

B. Either High Containment Purge gaseous or particulate radiation.

C. Either High Containment Atmosphere gaseous radiation or High Containment Purge gaseous radiation.

D. Either High Containment Purge gaseous or particulate radiation or High Containment Atmosphere gaseous or particulate radiation.

Question Number	065
Question	Wolf Creek has just experienced a complete loss of the Circulating Water Intake structure due to Lake freezing. Assuming no operator actions and all systems function as designed, which one of the following corresponds to the plant conditions 10 minutes after the loss of all circulating water pumps? RCS Tavg / S/G Pressures A. 557°F / 1092 psig B. 557°F / 1125 psig C. 561°F / 1092 psig D. 561°F / 1125 psig
Answer	D. 561°F 1125 psig
Allowed references	Steam Tables
LP and objective	SY1503900 Obj. 3
WCGS procedure - print references	
NRC KA Topic	075 A2.01 Ability to (a) predict the impacts of the following malfunctions or operations on the Circulating Water System; and (b) based on those predictions, use procedure to correct, control, or mitigate the consequences of those malfunctions or operation: Loss of intake structure.
NRC KA topic importance factors	3.0*/3.2
NRC 1122 KA - 10CFR55 41/43 tie	41.5/43.5/45.3/45.13
NRC difficulty rating	Not Available
WCGS difficulty rating and explanation	A3 The Operator must realize that the Unit will trip offline and the condenser is unavailable for a heat sink therefore the SG Atmospheric Relief valves must be used to control RCS temperature. He must also remember the pressure setpoint for the ARV's and be able to use the steam tables to predict the RCS Temperature.
Distracter explanation and references	A. Incorrect: The plant will trip and stabilize automatically on the SG Automatic Relief Valves which is set for 1125 psig corresponding to 561°F. Credible in that these numbers are realistic if the Steam Dumps were operational. B. Incorrect: The plant will trip and stabilize automatically on the SG Automatic Relief Valves which is set for 1125 psig corresponding to 561°F. Credible in that these are a combination of numbers from the Steam Dumps and the ARV's. If the operator is relying on memory only he will recognize both numbers are valid but may not realize they do not go together. C. Incorrect: The plant will trip and stabilize automatically on the SG Automatic Relief Valves which is set for 1125 psig corresponding to 561°F. Credible in that these are a combination of numbers from the Steam Dumps and the ARV's. If the operator is relying on memory only he will recognize both numbers are valid but may not realize they do not go together. D. Correct. The Plant will stabilize on the SG ARV's which are set at 1125 psig with a corresponding RCS temperature of 561°F RCS Temperature.
NRC ES-401 Tier and	SRO: Tier 2 Group 2 RO: Tier 2 Group 2

section location	
Question original source	Bank
Additional comments	

Question 065

Wolf Creek has just experienced a complete loss of the Circulating Water Intake structure due to Lake freezing.

Assuming no operator actions and all systems function as designed, which one of the following corresponds to the plant conditions 10 minutes after the loss of all circulating water pumps?

	RCS Tavg	S/G Pressures
A.	557°F	1092 psig
B.	557°F	1125 psig
C.	561°F	1092 psig
D.	561°F	1125 psig

Question Number	066
Question	An air leak has resulted in an automatic isolation of the service air header. The Control Room has entered ALR 00-092A, "Compress Air Press Lo." To restore the service air header to operation following repair, the operator will: A. Start an additional air compressor to raise pressure > 120 psig allowing KA PV-11 to modulate open automatically. B. Open the service air header PV-11 bypass valve and allow KA PV-11 to automatically open. C. Open the service air header PV-11 bypass valve and then manually open KA PV-11. D. Manually open KA PV-11.
Answer	B. Open the service air header PV-11 bypass valve and allow KA PV-11 to automatically open.
Allowed references	None
LP and objective	SY1407800, Rev. 003, Obj. 2,
WCGS procedure - print references	ALR 00-092A, SYS KA-120
NRC KA Topic	079 K1.01 Knowledge of the physical connections and/or cause-effect relationships between the SAS and the following systems: IAS.
NRC KA topic importance factors	3.0/3.1
NRC 1122 KA - 10CFR55 41/43 tie	41.2 TO 41.9/45.7/45.8
NRC difficulty rating	Not Available
WCGS difficulty rating and explanation	K3 - Lower order question. The candidate must recall the configuration of the service /instrument air isolation header and determine the method required to return it to service.
Distracter explanation and references	A. Incorrect - This is a plausible distracter because KA PV-11 does open automatically and starting additional air compressors does raise pressure. B. Correct - ALR 00-092A opens the bypass valve to equalize pressure across the valve and allow KA PV-11 to open automatically. C. Incorrect - This is a plausible distracter because opening the bypass is the correct thing to do and KA PV-11 does have a manual handwheel. D. Incorrect - This is a plausible distracter because KA PV-11 has a manual handwheel.
NRC ES-401 Tier and section location	SRO: Tier 2 Group 2 RO: Tier 2 Group 2
Question original source	New
Additional comments	NRC comment - Link stem to procedure better. Answer - Added the ALR to the stem of the question.

Question: 066

An air leak has resulted in an automatic isolation of the service air header. The Control Room has entered ALR 00-092A, "Compress Air Press Lo."

To restore the service air header to operation following repair, the operator will:

A. Start an additional air compressor to raise pressure > 120 psig allowing KA PV-11 to modulate open automatically.

B. Open the service air header PV-11 bypass valve and allow KA PV-11 to automatically open.

C. Open the service air header PV-11 bypass valve and then manually open KA PV-11.

D. Manually open KA PV-11.

Question Number	067
Question	A gradual loss of Service Water pressure is occurring. There are no demands on the Fire Protection System header. The Fire Protection System controls operate normally. Which one of the following will be the effect on the Fire Protection System? A. The Jockey Fire Pump will trip. B. The Electric Fire Pump will auto start to maintain header pressure. C. The Diesel Fire Pump will auto start 30 minutes after the Electric Fire Pump starts. D. Both the Electric and the Diesel Fire Pumps will auto start simultaneously.
Answer	B. The Electric Fire Pump will auto start to maintain header pressure.
Allowed references	None
LP and objective	SY1408600, Objective 2
WCGS procedure - print references	
NRC KA Topic	086 A1.01 Ability to predict and or monitor changes in parameters (to prevent exceeding design limits) associated with Fire Protection System operating the controls including: Fire header pressure.
NRC KA topic importance factors	2.9/3.3
NRC 1122 KA - 10CFR55 41/43 tie	41.5/45.5
NRC difficulty rating	Not Available
WCGS difficulty rating and explanation	A2 The candidate must put together that service water provides the suction pressure for the fire water jockey pump. On loss of service water pressure the jockey pump would not be able to maintain fire main pressure. As such the electric fire pump will start before the diesel fire pump. In the absence of any demand on the fire water system the electric pump will maintain pressure.
Distracter explanation and references	A. Incorrect: The jockey pump will continue to run when Fire Protection header pressure decreases but without suction pressure it will have no effect on fire header pressure. Credible in that the pump takes a suction off of the Service Water header and one may assume without suction pressure the pump may trip. B. Correct C. Incorrect: The Diesel Fire pump starts at 105 psig whereas the Electric Fire Pump starts at 115psig so the Electric should start first, it is a full capacity pump so as long as it is operating the Diesel Pump should not start. Credible as the response differs only by a matter of pressure setpoints.

	D. Incorrect: The Diesel Fire pump starts at 105 psig whereas the Electric Fire Pump starts at 115psig so the Electric should start first, it is a full capacity pump so as long as it is operating the Diesel Pump should not start. Credible as the response differs only by a matter of pressure setpoints.
NRC ES-401 Tier and section location	SRO: Tier 2 Group 2RO: Tier 2 Group 2
Question original source	Bank
Additional comments	NRC comment - Certain assumptions could make C or D correct. Answer - Changed stem to state that there are no demands on the Fire Protection header and changed distractors C and D wording.

Question: 067

A gradual Loss of Service Water pressure is occurring. There are no demands on the Fire Protection Header.

Which one of the following will be the effect on the Fire Protection System?

A. The Jockey Fire Pump will trip.

B. The Electric Fire Pump will auto start to maintain header pressure.

C. The Diesel Fire Pump will auto start 30 minutes after the Electric Fire Pump starts.

D. Both the Electric and the Diesel Fire Pumps will auto start simultaneously.

Question Number	068
Question	The Unit is in Mode 5 on RHR maintaining RCS Temperature at 170°F. The Reactor Operator adjusts EJ HIC-606 "RHR Heat Exchanger Flow Control Valve" to lower RCS Temperature. EJ FK-618 Heat Exchanger Bypass Valve is in Automatic. In what direction do the following valves respond to this adjustment? EJ FCV-618 RHR Heat Exchanger Bypass Valve / EJ HCV-606 RHR Heat Exchanger Flow Control Valve A. Open — Open B. Open — Close C. Close — Open D. Close — Close
Answer	C. Close — Open
Allowed references	None
LP and objective	SY1300500 Obj. 2
WCGS procedure - print references	
NRC KA Topic	005 A1.02 Ability to predict and or monitor changes in parameters (to prevent exceeding design limits) associated with operating the RHRS controls including: RHR flow rate.
NRC KA topic importance factors	3.3/3.4
NRC 1122 KA - 10CFR55 41/43 tie	41.5/45.5
NRC difficulty rating	Not Available
WCGS difficulty rating and explanation	A3 The Operator has to understand that to lower RCS temperature he must increase flow through the RHR Heat Exchanger. In order to do that the Flow Control valve must open further and the bypass valve must close down (to maintain a constant flow rate). The mini flow valve will be unaffected as flow rate through the pump is essentially remaining constant.
Distracter explanation and references	A. Incorrect: The bypass valve will tend to close and the mini flow will be unaffected. Credible in that if one wants to increase flow a choice would be for all valves to open for more flow. B. Incorrect: The flow control valve has to open to allow more cooling to the core. Credible in that if the operator incorrectly decided in the wrong direction initially these are probable choices for the bypass and the miniflow. C. Correct D. Incorrect: The flow control valve must open to reduce temperature. Credible in that if the operator became confused as to which way to change flow to reduce temperature these would work for him.
NRC ES-401 Tier and section location	SRO: Tier 2 Group 3 RO: Tier 2 Group 3

Question original source	NEW
Additional comments	

Question 068

The Unit is in Mode 5 on RHR maintaining RCS Temperature at 170°F. The Reactor Operator adjusts EJ HIC-606 "RHR Heat Exchanger Flow Control Valve" to lower RCS Temperature.

EJ FK-618 Heat Exchanger Bypass Valve is in Automatic.

In what direction do the following valves respond to this adjustment?

	EJ FCV-618 RHR Heat Exchanger Bypass Valve	EJ HCV-606 RHR Heat Exchanger Flow Control Valve
A.	Open	Open
B.	Open	Close
C.	Close	Open
D.	Close	Close

Question Number	069
Question	A Refueling Outage has just been completed. A routine QA inspection of maintenance records showed that the sparger line inside the Pressurizer Relief Tank (PRT) had been removed for testing and not re-installed. What effect will this have on PRT operation? A. Prevents pressure reduction by spray from Pressurizer Relief Tank Spray header. B. Prevents mixing nitrogen cover gas into tank volume via Nitrogen Supply Valve. C. Prevents drainage of the Pressurizer Relief Tank via Reactor Coolant Drain Pumps. D. Prevents a Pressurizer steam discharge from condensing effectively.
Answer	D. Prevents a Pressurizer steam discharge from condensing effectively
Allowed references	None
LP and objective	SY 1300200, Objective 4
WCGS procedure - print references	
NRC KA Topic	007 K3.01 Knowledge of the effect that a loss or malfunction of the PRTS will have on the following: Containment
NRC KA topic importance factors	3.3/3.6
NRC 1122 KA - 10CFR55 41/43 tie	41.7/45.6
NRC difficulty rating	Not Available
WCGS difficulty rating and explanation	K2 This is a simple knowledge question of the function of the sparger and its relationship with the Rupture disks.
Distracter explanation and references	A. Incorrect: The sparger routes the steam flow under the water so it can effectively condense. Credible in that this is also a function within the PRT. B. Incorrect: The sparger routes the steam flow under the water so it can effectively condense. Credible in that this is also a function within the PRT. C. Incorrect: The sparger routes the steam flow under the water so it can effectively condense. Credible in that this is also a function within the PRT. D. Correct
NRC ES-401 Tier and section location	SRO: Tier 2 Group 3 RO: Tier 2 Group 3
Question original source	New
Additional comments	NRC comment - Could sparger block pump suction? Answer - Changed stem to state sparger removed vice sparger line falling

	off.

Question: 069

A Refueling Outage has just been completed. A routine QA inspection of maintenance records showed that the sparger line inside the Pressurizer Relief Tank (PRT) had been removed for testing and not re-installed.

What effect will this have on PRT operation?

A. Prevents pressure reduction by spray from Pressurizer Relief Tank Spray header.

B. Prevents mixing nitrogen cover gas into tank volume via Nitrogen Supply Valve.

C. Prevents drainage of the Pressurizer Relief Tank via Reactor Coolant Drain Pumps.

D. Prevents a Pressurizer steam discharge from condensing effectively.

Question Number	70
Question	The operating crew is currently in GEN 00-003 "Hot Standby to Minimum Load" and has just completed the transition to Mode 1. Steam header pressure transmitter AB PT 507 has just failed high. Which ONE of the following describes the INITIAL plant response? A. Steam dumps CLOSE MFW Pump Speed INCREASES Bypass Feed Regulating Valves OPEN B. Steam dumps OPEN MFW Pump Speed UNCHANGED Bypass Feed Regulating Valves CLOSE C. Steam dumps CLOSE MFW Pump Speed UNCHANGED Bypass Feed Regulating Valves OPEN D. Steam dumps OPEN MFW Pump Speed INCREASES Bypass Feed Regulating Valves CLOSE
Answer	D. Steam dumps OPEN MFW Pump Speed INCREASES Bypass Feed Regulating Valves CLOSE
Allowed references	None
LP and objective	SY 1505902, SY1504100
WCGS procedure - print references	GEN 3 "Hot Standby to Minimum Load" SYS AE 121 " Turbine Driven Main Feedwater Pump Startup"
NRC KA Topic	041 K6.03 Knowledge of the effect of a loss or malfunction on the following will have on the SDS: Controller and positioners, including ICS, S/G,CRDS.
NRC KA topic importance factors	2.7/2.9
NRC 1122 KA - 10CFR55 41/43 tie	41.7/45.7
NRC difficulty rating	Not Available
WCGS difficulty rating and explanation	A3 The operator must recognize that the Steam Dumps, Bypass reg. valves and Main Feed Pumps are in automatic by this point in the procedure. He must then recognize that the input from PT 507 feeds directly into the Steam Dumps and the Feed pump control circuitry and analyze which direction this parameter will drive the controller output. The Reg. valves are driven by actual level so he must correctly choose which way SG level will go based on the previous controller outputs and then correctly analyze which way the reg. valves will respond to return SG level to program.
Distracter explanation and references	A. Incorrect: Steam Dumps will sense a high pressure and the controller will open the valves. Also as Main Feed Pump speed increases SG level will increase tending to close the Reg. Valves. Credible in that Main Feed Pump Speed does increase. B. Incorrect: Main Feed Pump Speed will increase in response to this failure. Credible in that Steam Dumps and Reg. valves will respond in this manner. C. Incorrect: All parameters in this choice respond in the opposite manner.

	Credible in that if the steam dumps close it will cause a shrinkage in the SG tending to open the Reg. Valves. D. Correct
NRC ES-401 Tier and section location	SRO: Tier 2 Group 3 RO: Tier 2 Group 3
Question original source	Bank
Additional comments	

Question 070

The operating crew is currently in GEN 00-003 "Hot Standby to Minimum Load" and has just completed the transition to Mode 1. Steam header pressure transmitter AB PT 507 has just failed high.

Which ONE of the following describes the INITIAL plant response?

A. Steam dumps CLOSE
MFW Pump Speed INCREASES
Bypass Feed Regulating Valves OPEN

B. Steam dumps OPEN
MFW Pump Speed UNCHANGED
Bypass Feed Regulating Valves CLOSE

C. Steam dumps CLOSE
MFW Pump Speed UNCHANGED
Bypass Feed Regulating Valves OPEN

D. Steam dumps OPEN
MFW Pump Speed INCREASES
Bypass Feed Regulating Valves CLOSE

Question Number	071
Question	A Safety Injection has occurred coincident with a bus fault on NB01. This has resulted in a Bus Lockout. All other systems have operated NORMALLY. Which of the following actions is required for Diesel Generator, NE01? A. Stop the Diesel within 5 minutes. B. Stop the Diesel within 30 minutes. C. Reset SI and start "A" ESW pump. D. No action required.
Answer	B. Stop the Diesel within 30 minutes.
Allowed references	None
LP and objective	LO1732444 Loss of AC Emergency Bus NB01(NB02)
WCGS procedure - print references	OFN NB-030, page 4; ALR 00-018A, Step 3 & 5; AP 15C-003, Section 6.2
NRC KA Topic	076 A2.02 Ability to (a) predict the impacts of the following malfunctions or operations on the SWS; and (b) based on those predictions, use procedures to correct, control, or mitigate the consequences of those malfunctions or operation: Service water header pressure.
NRC KA topic importance factors	2.7/3.32
NRC 1122 KA - 10CFR55 41/43 tie	41.5/43.5/45.3/45.13
NRC difficulty rating	Not Available
WCGS difficulty rating and explanation	A3 - Higher order question. The operator must recognize that the Diesel has received a start signal but that the bus is not capable of being loaded due to the bus lockout. This results in a loss of cooling due to automatic isolation of the Service Water System and a failure of the ESW pump to start due to lack of power on the bus. The operator must recognize the above sequence and then choose the correct time limit from the OFN for securing the Diesel.
Distracter explanation and references	A. Incorrect: Required time is 30 minutes. Credible in that the given time is used for RCP stop criteria.. B. Correct C. Incorrect: There is no power on the bus. Credible if the operator confuses the SI reset with the bus lockout. D. Incorrect: Required time is 30 minutes. Credible if operator follows in EMG network as it does not explicitly tell you to secure the diesel under these circumstances. However it is expected and covered in the OFN.
NRC ES-401 Tier and section location	SRO: Tier 2 Group 3 RO: Tier 2 Group 3
Question original	Bank Modified

source	
Additional comments	NRC comment - Does EMG direct use of OFN? What assures that OFN is implemented? Answer - AP 15C-003, "Procedure Users Guide for Abnormal Plant Conditions", states that while performing EMGs, plant conditions may indicate the need to correct problems not directly related to the event mitigation strategy. The procedure says the operator may perform OFNs and ALRs which address these problems as long as the actions do not interfere with performance of the EMGs. The ALR directs the use of OFN NB-030 where the foldout page directs the stopping of the unloaded diesel within 30 minutes.

Question: 071

A Safety Injection has occurred coincident with a bus fault on NB01. This has resulted in a Bus Lockout. All other systems have operated NORMALLY.

Which of the following actions is required for Diesel Generator, NE01?

A. Stop the Diesel within 5 minutes.

B. Stop the Diesel within 30 minutes.

C. Reset SI and start "A" ESW pump.

D. No action required.

Question Number	072
Question	At 20% power, a reactor coolant pump trip occurs during a load transient causing Tavg to droop to 549°F, pressurizer level drops to 18%, and pressurizer pressure drops to 2210 psig. Identify which parameter below has the most restrictive Technical Specification limit action statement time requirement for the described conditions. A. Tavg. B. Pressurizer Level. C. Pressurizer Pressure. D. RCS loops in operation.
Answer	A. Tavg
Allowed references	None
LP and objective	SY 13 010 00, Rev 001 Objective 12 SY 13 001 00, Rev 005 Objective 15 LO 17 321 09, Rev 003 Objective 1
WCGS procedure - print references	Technical Specifications 3.1.1.4 3.2.5 3.4.1.1
NRC KA Topic	2.1.11 Knowledge of less than one hour technical specification action statements for systems.
NRC KA topic importance factors	3.0/3.8
NRC 1122 KA - 10CFR55 41/43 tie	43.2/45.13
NRC difficulty rating	Not Available
WCGS difficulty rating and explanation	K-3 Each of the stem conditions indicate out of specification parameters. This increases question complexity requiring each parameter to evaluated against the technical specification before accepting or rejecting an answer. Higher difficulty level due to the number of technical specifications involved.
Distracter explanation and references	A. Correct - T/S 3.1.1.4 action a, 15 minutes to restore or be in HSB in next 15 minutes. B. Incorrect - Pzr level is TS 3.4.3, but is for high level not low level. Credible in that this is a valid TS for the conditions noted. C. Incorrect - TS 3.2.5 says 2 hours to fix or reduce power to <5% within the next 4 hours. Credible in that this is a valid TS for the conditions noted. D. Incorrect - TS 3.4.1.1 is Hot Stby in 6 hours. Credible in that this is a valid TS for the conditions noted.
NRC ES-401 Tier and section location	SRO: Tier 3 RO: Tier 3
Question original source	Wolf Creek Feb 98 Exam
Additional comments	

Question 072

At 20% power, a reactor coolant pump trip occurs during a load transient causing Tavg to droop to 549°F, pressurizer level drops to 18%, and pressurizer pressure drops to 2210 psig.

Identify which parameter below has the most restrictive Technical Specification limit action statement time requirement for the described conditions.

A. Tavg.

B. Pressurizer Level.

C. Pressurizer Pressure.

D. RCS loops in operation.

Question Number	073
Question	During an emergency it becomes necessary to close a valve in a Very High Radiation Area to stop a leak. Which one of the following is the minimum RWP requirement needed in order to make the entry? A. The entry can be made under an existing General RWP. B. A Specific RWP is required to be written prior to entry. C. A Specific RWP with approval by the SS is required. D. Escort by a HP Tech may be substituted for a RWP.
Answer	D
Allowed references	N/A
LP and objective	LO 17 332 04
WCGS procedure - print references	AP 25A-001 Step 6.7.5.4
NRC KA Topic	2.3.2 Knowledge of the facility ALARA program
NRC KA topic importance factors	2.5/2.9
NRC 1122 KA - 10CFR55 41/43 tie	45.10/45.9 43.4/41.12
NRC difficulty rating	A-3 Aug 97 WCGS Initial Exam
WCGS difficulty rating and explanation	A-3 - Higher order in that it requires recalling requirements for entry into a very high radiation area, and comprehending that in emergencies requirements can be altered to respond to the situation
Distracter explanation and references	A. Incorrect - Very High Radiation Areas require a specific RWP, Step 6.7.4.3 of AP 25A-001. Credible in that the candidate knows that it is an emergency and will want to use some form of RWP. B. Incorrect - In an emergency continuous escort by a HP Tech. may be substituted for a RWP. The RWP can be completed "after-the-fact". Credible in that this is true for non-emergency situations. C. Incorrect - Continuous escort by a HP Tech. may be substituted for a RWP, SS approval is not required. Credible in that a Specific RWP is required in non-emergency situations. D. Correct - For jobs of short duration, emergencies or where quick action is necessary, continuous escort by an HP may be substituted for an RWP. Step 6.7.5.4 of AP 25A 001.
NRC ES-401 Tier and section location	RO: Tier 3 SRO: Tier 3
Question original source	Aug 97 WCGS Initial Exam
Additional comments	

Question: 073

During an emergency it becomes necessary to close a valve in a Very High Radiation Area to stop a leak.

Which one of the following is the minimum RWP requirement needed in order to make the entry?

A. The entry can be made under an existing General RWP.

B. A Specific RWP is required to be written prior to entry.

C. A Specific RWP with approval by the SS is required.

D. Escort by a HP Tech may be substituted for a RWP.

b. Access to Posted Areas

1) Access to any posted area should be through a designated point or area. No entrance or exit may be made by any route other than through such designated points when applicable.

2) Entrance into a posted area may have additional requirements. Any special requirement shall be posted along with the required signs at the entrance point.

3) All Very High Radiation Areas shall be conspicuously posted and barricaded and locked. Entry into these areas requires a Specific RWP, constant Health Physics coverage, and authorization from the Shift Supervisor and the Manager Chemistry/Radiation Protection. If the radiological conditions change all work shall be terminated and the radworkers shall exit the area. Continuous surveillance by Health Physics personnel or remote monitoring by electronic means can be utilized. Communications should be maintained at all times. [Commitment Step 3.2.1]

4) All High Radiation Areas shall be conspicuously posted and barricaded. Entry into these areas shall be covered by an approved RWP. Individuals entering such areas shall be provided a dose rate monitoring device, a dose integrating device with a predetermined alarm set point or a qualified Health Physics Technician with a dose rate instrument.

5) All Locked High Radiation Areas shall be locked except during periods of access covered by an approved RWP which specifies maximum stay time. Continuous surveillance (direct or remote) by Health Physics may be utilized in lieu of maximum stay time. [Commitment Step 3.2.1]

6) A Locked High Radiation Area may be equipped with a control device that, upon entry into the area, causes the level of radiation to be reduced below that level at which an individual might receive a deep-dose equivalent of 0.1 rem (1 mSv) in 1 hour at 30 centimeters from the radiation source or from any surface that the radiation penetrates. [Commitment Step 3.2.1]

7) For individual Locked High Radiation Areas that are located within large areas, such as the Containment, where no enclosure exists for purposes of locking, and where no enclosure can be reasonably constructed around the individual area, that individual area shall be barricaded, conspicuously posted, and flashing light shall be activated as a warning device. [Commitment Step 3.2.1]

6.7.5 Radiation Work Permit

1. In addition to controlling access to the RCA, the primary purpose of the Radiation Work Permit (RWP) is to control the exposure of plant personnel to radiological hazards. The RWP, also, provides a history for ALARA review. The RWP accomplishes this in the following ways:

   a. Provide administrative control of access to hazardous or potentially hazardous areas.

   b. Administratively control and minimizes the spread of contamination.

   c. Helps to prevent the unexpected production of a radiological hazard.

   d. Provide a mechanism for the work to be aware of radiological hazards and to follow proper radiological protection procedures.

   e. Provide a history of personnel exposure.

2. The use of the RWP does not change or modify the plant work request system.

3. An RWP shall be required for any job which entails, but is not limited to any of the following conditions:

a. Work that is to be performed in the Radiological Controlled Area.

b. Work in areas or on equipment with removable contamination in excess of 1000 dpm/100 cm^2 beta-gamma or 20 dpm/100 cm^2 alpha.

c. Any work involving changes (withdrawing, uncovering, opening, valving, disassembly, moving), that have potential for causing significant, or unexpected increases in radiation or contamination levels.

d. Handling of certain license radioactive materials.

e. Entry to, or planned work in an area where the airborne radioactive material is equal to or greater than 0.3 DAC.

f. Entry into a High Radiation Area.

g. Entry or work in a Zone 2 or Zone 3 Hot Particle Area.

h. Any other situation as deemed necessary by the Health Physics Group.

4. For jobs of very short duration, emergencies, or where quick action is necessary, the continuous escort by a Health Physics Technician may be substituted for a RWP. In such cases, the RWP may be completed "after-the-fact" for any exposure documentation.

5. Any individual may request an RWP should it appear that conditions warrant it. Normally, the responsibility for initiating an RWP shall lie with the supervisor directly concerned with the work. Health Physics personnel may require that an RWP be obtained for a job, should it appear that conditions warrant it.

Question number	074
Question	A Wolf Creek operator is required to complete a valve lineup in an area where the radiation level is 50 mrem/hour. The operator's current TEDE is 1750 mrem. How long can he work in this area and not exceed WCGS administrative limits? (Assume no extensions have been authorized) A. Five hours. B. Fifteen hours. C. Twenty-five hours. D. Sixty-five hours.
Answer	A. Five hours.
Allowed references	None
LP and objective	LO 17 332 04, Rev. 003 Objective B.5
WCGS procedure - print references	AP 25B-100, 6.2.3, Att. A.
WCGS task ties	19402302, 19402301
NRC KA Topic	2.3.4 Knowledge of radiation exposure limits and contamination control, including permissible levels in excess of those authorized.
NRC KA topic importance factors	2.5/3.1
NRC 1122 KA 10CFR 41/43 tie	43.4/45.10
WCGS 10CFR tie and reason	10CFR55.43 (4)
NRC difficulty rating	not available
WCGS difficulty rating and explanation	A-2 Higher order question. The individual must recall the limits allowed for radiation exposure, then calculate the appropriate stay time. Level difficulty two. First the student must recall the correct radiation limit that applies, then calculate the permitted stay time. Difficulty is increased because some answers are based on some known radiological limit such as the old NRC annual limit of 5 REM, or WCGS extended limit of 3000mREM
Distracter explanation and references	A. Correct - The administrative limit is 2000mrem. He has 250 mrem room. His dose area is 50 mrem. 250 mrem divided by 50 mrem per hour provides for 5 hours stay time. B. Incorrect - The administrative limit is 2000mrem, and Fifteen hours would be a total dose of 2500 mrem for the individual. Credible in that 15 hours is based on a limit of 2500 mrem. C. Incorrect - Credible in that this number is based on the 3000 mrem limit which does not apply without additional permission. D. Incorrect - Credible in that this time would be correct if the student used 5000 mrem limit to determine his answer.
NRC ES-401 Tier and section location	SRO: Tier 3 RO: Tier 3
Question original source	Wolf Creek Feb. 1998 NRC Exam
Additional comments	

Question 074

A Wolf Creek operator is required to complete a valve lineup in an area where the radiation level is 50 mrem/hour. The operator's current TEDE is 1750 mrem.

How long can he work in this area and not exceed WCGS administrative limits?

(Assume no extensions have been authorized)

A. Five hours.

B. Fifteen hours.

C. Twenty-five hours.

D. Sixty-five hours.

Question Number	075
Question	During the performance of ES-11, "Post LOCA Cooldown and Depressurization," Step 9, the operator is instructed to stop the RHR pumps and place in standby if RCS pressure is greater than 300 psig and stable or increasing. During subsequent recovery actions, which of the following applies regarding operation of the RHR pumps? A. If pressure drops in an uncontrolled manner to less than 300 psig, the operator will be required to manually restart the pumps. B. The RHR pumps will no longer be required for injection, even if RCS pressure drops uncontrollably, since the RHR system will be available to be placed in service in the cooldown mode. C. The RHR pumps will no longer be required, even if RCS pressure drops uncontrollably, since the CCPs will be capable of providing sufficient flow to remove decay heat. D. If pressure drops in an uncontrolled manner to less than 300 psig, the LOCA sequencer will restart the pumps.
Answer	A. If pressure drops in an uncontrolled manner to less than 300 psig, the operator will be required to manually restart the pumps.
Allowed references	None
LP and objective	LO 1732321, Rev. 008
WCGS procedure - print references	EMG ES - 11 Post LOCA Cooldown and Depressurization
NRC KA Topic	2.4.6 Knowledge symptom based EOP mitigation strategies.
NRC KA topic importance factors	3.1/4.0
NRC 1122 KA - 10CFR55 41/43 tie	41.10/43.5/45.13
NRC difficulty rating	Not Available
WCGS difficulty rating and explanation	K3 - Lower order question. The candidate must recall the procedural requirement for operating the RHR pumps if RCS pressure decreases to less than 300 psig.
Distracter explanation and references	A. Correct - EMG ES-11, Step 9 directs this action for the existing plant conditions. B. Incorrect - This is contrary to procedure guidance. Plausible distractor because after stopping the pumps they are still available if needed. C. Incorrect - This is contrary to procedure guidance. Plausible distractor because the CCPs are capable of removing some heat but not necessarily all decay heat. D. Incorrect - The LOCA sequencer will not load the equipment on the bus. Plausible because the LOCA will initially load the equipment on the bus.
NRC ES-401 Tier	RO: Tier 3

and section location	SRO: Tier 3
Question original source	Exam Bank
Additional comments	NRC Comment - Question is too easy. Does not discriminate. Answer - Replaced the question. Added "for injection" and " in the cooldown mode" to make B more plausible.

Question: 075

During the performance of ES-11, "Post LOCA Cooldown and Depressurization," Step 9, the operator is instructed to stop the RHR pumps and place in standby if RCS pressure is greater than 300 psig and stable or increasing.

During subsequent recovery actions, which of the following applies regarding operation of the RHR pumps?

A. If pressure drops in an uncontrolled manner to less than 300 psig, the operator will be required to manually restart the pumps.

B. The RHR pumps will no longer be required for injection, even if RCS pressure drops uncontrollably, since the RHR system will be available to be placed in service in the cooldown mode.

C. The RHR pumps will no longer be required, even if RCS pressure drops uncontrollably, since the CCPs will be capable of providing sufficient flow to remove decay heat.

D. If pressure drops in an uncontrolled manner to less than 300 psig, the LOCA sequencer will restart the pumps.

Question Number	076
Question	• The plant is operating at 100% steady state conditions with all control systems operating in AUTOMATIC and all process controllers selected to the NORMAL controlling channels. • All Technical Specification related equipment are OPERABLE. • Annunciator 00-A25 NN01 Inst. Bus UV alarms with a valid condition. With no operator action, which of the following will occur first? A. Reactor trip. B. OTΔT Rod Stop. C. Reactor Trip & Safety Injection. D. Violation of the Minimum Temperature for Criticality.
Answer	A. Reactor trip
Allowed references	None
LP and objective	LO1732431 " OFN NN-021 Loss of Vital Instrument Bus"
WCGS procedure - print references	OFN NN-021 Loss of Vital Instrument Bus M-744-0030 Feedwater Control
NRC KA Topic	057 AA.06 Ability to operate and/or monitor the following as they apply to the Loss of Vital Instrument Bus: Manual control of components for which automatic control is lost.
NRC KA topic importance factors	3.5/3.5
NRC 1122 KA - 10CFR55 41/43 tie	41.7/45.5/45.6
NRC difficulty rating	Not Available
WCGS difficulty rating and explanation	A2 The operator must remember that SG level controls are fed off of NN01 and that bus is deenergized. Prompt action must be taken to prevent a Reactor Trip on SG Level. In addition rods are inserting at 72 SPM due to PT505 failure and the candidate must balance the relative rates of change due to SG Level and a Tave decrease. The SG level change is more severe and will occur first.
Distracter explanation and references	A. Correct: Actual SG level will decrease rapidly tripping the Reactor on Low Level. The operator takes prompt action in the first step of OFN NN-021 " Loss of Vital 120 VAC Instrument Bus" to mitigate this. B. Incorrect: The OTΔT Rod Stop Requires 2 out of 4 coincidence and this failure only loses one channel. Credible in that PR rod stop will occur as there coincidence is only 1 out of 4.Incorrect: C. Incorrect: A Safety Injection will not occur as the coincidence requires at least two channels. Credible in that NN01 feeds many circuits required for Safety Injection. Also Charging Swaps to the RWST, Letdown isolates, Pzr Level increase. These effects may confuse the

	candidate as to whether or not a Safety Injection will occur. D. Incorrect: The SG Level channel failure is quicker and will occur first. Credible in that rods are quickly driving Temperature down due to the PT-505 failure.
NRC ES-401 Tier and section location	SRO: Tier 1 Group 1
Question original source	New
Additional comments	NRC Comment - Need conclusive proof that "A" always happens before "D". Answer - Leave the distractor as is. This scenario was tested on the simulator without operator action as stated in the stem. The unit trips rapidly on S/G level.

Question: 076

- The plant is operating at 100% steady state conditions with all control systems operating in AUTOMATIC and all process controllers selected to the NORMAL controlling channels.
- All Technical Specification related equipment are OPERABLE.
- Annunciator 00-A25 NN01 Inst. Bus UV alarms with a valid condition.

With no operator action, which of the following will occur first?

A. Reactor trip.

B. OTΔT Rod Stop.

C. Reactor Trip & Safety Injection.

D. Violation of the Minimum Temperature for Criticality.

Question Number	077
Question	The Unit is in Mode 3 with vacuum established and readying for a Startup. A Radioactive Liquid Release is in progress. A Loss of Offsite Power occurs but is restored within 2 minutes. The Release should be: A. automatically secured. B. unaffected. C. secured by the Operator. D. sampled within 2 hours.
Answer	A. automatically secured.
Allowed references	None
LP and objective	SY1406900, SY1507500
WCGS procedure - print references	E03HB11 (HB-RV-18 Electrical print), E03HF03 (HF-RV-45 Electrical print)
NRC KA Topic	059 AA2.03 Ability to determine and interpret the following as they apply to the Accidental Liquid Radwaste Release: Failure Modes, their symptoms, and the causes of misleading indications on a radioactive-liquid monitor
NRC KA topic importance factors	3.6
NRC 1122 KA - 10CFR55 41/43 tie	43.5/45.13
NRC difficulty rating	Not Available
WCGS difficulty rating and explanation	A2 The candidate must analyze the effects of a loss of Offsite power in relation to the Radioactive Liquid Release. The candidate must then realize that the loss of Offsite power will trip all Circ Water pumps and that this is interlocked with the control circuit for the Liquid Radwaste Monitor (HB RE-18) and overboard discharge valve which will then close the valve securing the release.
Distracter explanation and references	A. Correct: Circ Water pumps are deenergized on the loss of offsite power and this will result in the closing of the overboard discharge valve securing the release. B. Incorrect: The valve will receive a close signal. Credible in that the operator may realize that the monitor is powered from a source that will remain energized throughout this transient and that the release will continue and have had continuous monitoring. C. Incorrect: It will already have been secured automatically. Credible in that if the operator assumed it remained open that with such a transient the release should be discontinued and conditions reevaluated. D. Incorrect: The release will have been secured and will have to be sampled at some point prior to reinitiation but there is no requirement for sampling within 2 hours. Credible in that this is a common sampling time for various other parameters and if one assumes the release is ongoing but has had an interruption in monitoring this would be a conservative response.
NRC ES-401 Tier and section location	SRO: Tier 1 Group 1
Question original source	New
Additional comments	

Question 077

The Unit is in Mode 3 with vacuum established and readying for a Startup. A Radioactive Liquid Release is in progress. A Loss of Offsite Power occurs but is restored within 2 minutes.

The Release should be:

A. automatically secured.

B. unaffected.

C. secured by the Operator.

D. sampled within 2 hours.

Question Number	078
Question	A rapid (5%/min) power reduction from 100% to 60% was performed due to grid instabilities. Power has been stable at 60% for seven hours. The results from the RCS chemistry samples taken four hours after power was stabilized at 60%, reveal the following; • Dose equivalent I-131 (DEI) is 97 μCi/gm • Gross coolant activity is 18 μCi/gm • E-Bar = 0.4 μCi/gm What actions are required due to the above sample? A. Increase letdown to 120 gpm in accordance with OFN BB-006 "High Reactor Coolant Activity". B. Decrease reactor power at rate specified by chemistry until transient limits are within specification for the present reactor power. C. The DEI limit has been exceeded, be in Hot Standby with T_{ave} < 500°F within 6 hours. D. The 100/E-Bar limit has been exceeded, be in Hot Standby with T_{ave} < 500°F within 6 hours.
Answer	A. Increase letdown to 120 gpm in accordance with OFN BB-006 "High Reactor Coolant Activity".
Allowed references	Graph of DEI I-131 and % RTP Tech Spec page 3 / 4 4-27
LP and objective	LO4110540 OFN BB-06 "Response to High Reactor Coolant Activity"
WCGS procedure - print references	OFN BB-06 "Response to High Reactor Coolant Activity" Technical Specification
NRC KA Topic	076 2.4.4
NRC KA topic importance factors	4.3
NRC 1122 KA - 10CFR55 41/43 tie	41.1/43.2/45.6
NRC difficulty rating	Not Available
WCGS difficulty rating and explanation	A3 The operator must analyze the current RCS conditions, a graph of DE-131, and calculate the 100/E Bar to determine the correct course of action. Once he has determined he meets the entry conditions for the OFN BB-06 he must remember the actions contained within the procedure.
Distracter explanation and references	A. Correct B. Incorrect. There is no procedural guidance which directs chemistry to control a shutdown due to the conditions noted above. Tech Specs is the only driving force for a shutdown. Credible in that it is reasonable to want to reduce power if there is a problem such as a leaking fuel assembly. C. Incorrect. While the DEI exceeds 1μCi/gm it has not stayed above the limit for 48 hours or exceeded the graph limits which were provided to the student. Therefor a shutdown is not required. Credible in that this is a required action if the conditions above had been exceeded. D. Incorrect. The 100/E-bar limit has not been exceeded as gross activity is < 250 μCi/gm. Credible in that if these are the required actions if they had been exceeded.

NRC ES-401 Tier and section location	SRO: Tier 1 Group 1
Question original source	Modified Bank
Additional comments	

Question 078

A rapid (5%/min) power reduction from 100% to 60% was performed due to grid instabilities.

Power has been stable at 60% for seven hours.

The results from the RCS chemistry samples taken four hours after power was stabilized at 60%, reveal the following;

- Dose equivalent I-131 (DEI) is 97 μCi/gm
- Gross coolant activity is 18 μCi/gm
- E-Bar = 0.4 μCi/gm

What actions are required due to the above sample?

A. Increase letdown to 120 gpm in accordance with OFN BB-006 "High Reactor Coolant Activity".

B. Decrease reactor power at rate specified by chemistry until transient limits are within specification for the present reactor power.

C. The DEI limit has been exceeded, be in Hot Standby with T_{ave} < 500°F within 6 hours.

D. The 100/E-Bar limit has been exceeded, be in Hot Standby with T_{ave} < 500°F within 6 hours.

Question number	079
Question	The following conditions exist: • Pzr. pressure - 1985 psig • Pzr temperature - 636 °F • RCS temperature - 364 °F • PORV BB PV-455A and its associated block valve indicates open Which parameter set is correct? PRT Press. PRT Temp. A. 40 psig 267 °F B. 25 psig 267 °F C. 25 psig 636 °F D. 85 psig 364 °F
Answer	B.
Allowed References	Steam Tables
LP and Objective	LO 13 010 00, Rev 008 Objective 10; LO 12 311 23, Rev 004 Objective 13 & 14
WCGS procedure - print references	N/A
NRC KA topic	000008 2.4.47 Ability to diagnose and recognize trends in an accurate and timely manner utilizing the appropriate control room reference material.
NRC KA topic importance factors	3.4/3.7
NRC 1122 KA 10CRF 41/43 tie	43.5/41.10
NRC difficulty rating	Not Available
WCGS difficulty rating and explanation	A-3 Higher order question. The student must interpret the given plant data and then determine which of the conditions accurately reflect plant status. Difficulty level 3. The student must determine which set of data points is correct for a PORV being open and discharging to the PRT. Requires use of steam tables and system knowledge to determine the status.
Distracter explanation and references	Note - Downstream of PORV will be at saturation temp. for the PRT A. Incorrect - due non saturation conditions downstream of PORV, but is the answer if student confuses psia and psig. B. Correct - Due to the throttling process downstream pressure will depend on the volume of vapor in the PRT. The downstream temperature will be Tsat for PRT pressure. C. Incorrect - due non saturation conditions downstream of PORV. Credible if the student thinks that the upstream temperature should be the same as the downstream temperature and does not understand the throttling process. D. Incorrect - Pressure-temperature relationship is correct which makes this selection credible but the PRT pressure is greater than PRT rupture disk pressure makes this response wrong.
NRC ES-401 Tier and section location	SRO: Tier 1 Group 2
Question original source	Wolf Creek Feb. 1998 NRC Exam
Additional comments	

Question 079

The following conditions exist:

- Pzr. pressure - 1985 psig
- Pzr temperature - 636 °F
- RCS temperature - 364 °F
- PORV BB PV-455A and its associated block valve indicates open

Which parameter set is correct?

	PRT Press.	PRT Temp.
A.	40 psig	267 °F
B.	25 psig	267 °F
C.	25 psig	636 °F
D.	85 psig	364 °F

Question Number	080
Question	Given the following: • The plant is in MODE 3 • A reactor startup is in progress • Reactor power is at 10^3cps • Control Rods are being withdrawn Subsequently BOTH Source Range channels fail to zero Which of the following describes the action(s) to be taken? A. Continue approach to criticality using Gammametrics. B. Immediately open the reactor trip breakers. C. Stop all positive reactivity additions while maintaining current power. D. Commence a reactor shutdown.
Answer	B
Allowed references	None
LP and objective	LO1732103
WCGS procedure - print references	GEN 00-003 Hot Standby to Minimum Load
NRC KA Topic	032 2.4.48 Ability to interpret control room indications to verify the status and operation of system, and understand how operator actions and directives affect plant and system conditions.
NRC KA topic importance factors	3.8
NRC 1122 KA - 10CFR55 41/43 tie	43.5/45.12
NRC difficulty rating	Not Available
WCGS difficulty rating and explanation	A2 The Operator must analyze plant conditions and determine that the plant is subcritical below the P-6 setpoint. The candidate must then use his knowledge of procedure precaution and limitation and Technical Specification to determine the correct course of action.
Distracter explanation and references	A. Incorrect: Tech Spec and Gen 3 both require the Trip Breakers to be opened. Credible in that they are Safety Related Monitors and available to monitor this Power Range. B. Correct: If the Reactor is subcritical and below the P-6 setpoint then Open the Reactor Trip Breakers. C. Incorrect: Tech Spec and Gen. 3 both require the Trip Breakers to be opened in Mode 3 without SR Instruments. Credible if in Mode 2 this is the required action for loss of one Source Range Instrument. D. Incorrect: Tech Spec and Gen. 3 both require the Trip Breakers to be opened in Mode 3 without SR Instruments. Credible if in Mode 2 this is the required action for loss of both Source Range Instrument.
NRC ES-401 Tier and	SRO: Tier 1 Group 2

section location	
Question original source	Bank
Additional comments	

Question 080

Given the following:

- The plant is in MODE 3
- A reactor startup is in progress
- Reactor power is at 10^3cps
- Control Rods are being withdrawn

Subsequently BOTH Source Range channels fail to zero

Which of the following describes the action(s) to be taken?

A. Continue approach to criticality using Gammametrics.

B. Immediately open the reactor trip breakers.

C. Stop all positive reactivity additions while maintaining current power.

D. Commence a reactor shutdown.

Question Number	081
Question	A Technical Specification Action Statement entry would be required if the unit is _____ and I & C reports that _____. A. at 8% power; the N-35 Hi Flux Trip Bistable setpoint is the current equivalent of 38% B. conducting a reactor startup with IR level at 1.0E-8 amps; all RCP underfrequency trip relays were calibrated with a frequency meter that was out of calibration in the non-conservative direction C. in Mode 1; both Source Range instruments should be declared inoperable due to the failure of the detector cables D. in Mode 3; the Turbine Impulse Pressure Transmitter that feeds P-13 should be declared inoperable due to a leaking capacitance bellows assembly
Answer	A
Allowed references	None
LP and objective	SY1301501, Rev.007 Obj. 13
WCGS procedure - print references	Technical Specification 3.3.1, Table 3.3-1
NRC KA Topic	033 2.1.10 Knowledge of conditions and limitations in the facility license.
NRC KA topic importance factors	2.7/3.9
NRC 1122 KA - 10CFR55 41/43 tie	43.1/45.13
NRC difficulty rating	Not Available
WCGS difficulty rating and explanation	K3 - Lower order question. The candidate must recall the mode requirements of all the stated instrumentation and the setpoint range limitations. This is a K3 due to the volume of different memory items involved.
Distracter explanation and references	A. Correct - Required by Technical Specification 3.3.1, Action 3.b. Restore the inoperable channel to operability prior to increasing above 10% RTP. B. Incorrect - Technical Specification 3.3.1 requires this in Mode 1 only. This is a plausible distracter because it may be mistaken as a Mode 2 requirement. C. Incorrect - Technical Specification 3.3.1 requires this in every Mode except Mode 1. This is a plausible distracter since it includes a loss of both channels a Technical specification action statement entry would seem logical. D. Incorrect - Technical Specification 3.3.1 requires this in Mode 1 only. This is a plausible distracter since it is a trip permissive.
NRC ES-401 Tier and section location	SRO: Tier 1 Group 2
Question original source	Exam Bank
Additional comments	

Question 081

A Technical Specification Action Statement entry would be required if the unit is _____ and I & C reports that _____.

A. at 8% power; the N-35 Hi Flux Trip Bistable setpoint is the current equivalent of 38%

B. conducting a reactor startup with IR level at 1.0E-8 amps; all RCP underfrequency trip relays were calibrated with a frequency meter that was out of calibration in the non-conservative direction

C. in Mode 1; both Source Range instruments should be declared inoperable due to the failure of the detector cables

D. in Mode 3; the Turbine Impulse Pressure Transmitter that feeds P-13 should be declared inoperable due to a leaking capacitance bellows assembly

Question Number	082
Question	Which one of the following describes the operation of 5 KVA Inverter PN09 when the 125VDC supply is interrupted? A. The Static Switch will automatically transfer to the alternate power source and will automatically transfer back to the inverter when 125VDC is restored. B. The Static Switch will automatically transfer to the alternate power source, but must be manually transferred back to the inverter when 125VDC is restored. C. PN07 automatic transfer switch will automatically transfer to an alternate power source and will automatically transfer back to the inverter when 125 VDC is restored. D. PN07 automatic transfer switch will automatically transfer to an alternate power source but must be manually transferred back to the inverter when 125 VDC is restored.
Answer	A. The Static Switch will automatically transfer to the alternate power source and will automatically transfer back to the inverter when 125VDC is restored.
Allowed references	None
LP and objective	SY1506305, Rev. 000, Obj. 4
WCGS procedure - print references	SYS PN-200, ALR 00-14F, E-13PN01A, E-077-00014 Uninterruptible Power Systems Vendor Manual
NRC KA Topic	058 AA1.02 Ability to operate and/or monitor the following as they apply to the loss of DC power: static inverter dc input breaker, frequency meter, ac output breaker, and ground fault detector.
NRC KA topic importance factors	3.1/3.1
NRC 1122 KA - 10CFR55 41/43 tie	41.7/45.5/45.6
NRC difficulty rating	N/A
WCGS difficulty rating and explanation	K2 - Lower order question. The candidate must recall the operation of the static switch.
Distracter explanation and references	A. Correct - The static switch will transfer to the alternate source on loss of the inverter. When the inverter is restored, it automatically powers the bus. B. Incorrect - The static switch will transfer to the alternate source on loss of the inverter. When the inverter is restored it automatically powers the bus. This is a plausible distracter because the PN07 automatic bus transfer switch transfers to its alternate source automatically but must be

	manually transferred back. PN07 is the alternate source. C. Incorrect - The PN07 automatic transfer switch automatically transfers to the alternate power supply but is manually returned to normal. This is a plausible distracter because PN07 is the alternate power source. D. Incorrect - The PN07 automatic transfer switch automatically transfers to the alternate supply. This is a plausible distracter because it describes transfer of PN07, the alternate power source.
NRC ES-401 Tier and section location	SRO: Tier 1 Group 2
Question original source	Exam Bank
Additional comments	NRC Comment - Distractors not credible - static transfer/manual. Answer - Changed the wording in distractors B, C, and D.

Question: 082

Which one of the following describes the operation of 5 KVA Inverter PN09 when the 125VDC supply is interrupted?

A. The Static Switch will automatically transfer to the alternate power source and will automatically transfer back to the inverter when 125VDC is restored.

B. The Static Switch will automatically transfer to the alternate power source, but must be manually transferred back to the inverter when 125VDC is restored.

C. PN07 automatic transfer switch will automatically transfer to an alternate power source and will automatically transfer back to the inverter when 125 VDC is restored.

D. PN07 automatic transfer switch will automatically transfer to an alternate power source but must be manually transferred back to the inverter when 125 VDC is restored.

Question Number	083
Question	Which one of the following area radiation monitors could require entrance into a Technical Specification action statement if the monitor was inoperable. A. SD RE-043 TSC area monitor B. SD RE-044 EOF area monitor C. SD RE-037 Bridge crane area monitor D. SD RE-26 RHR heat exchanger area monitor
Answer	C
Allowed references	None
LP and objective	SY1407200, Rev. 003, Obj. 4
WCGS procedure - print references	Technical Specifications
NRC KA Topic	061 2.1.10 Knowledge of conditions and limitations in the facility license.
NRC KA topic importance factors	2.7/3.9
NRC 1122 KA - 10CFR55 41/43 tie	43.1/45.13
NRC difficulty rating	N/A
WCGS difficulty rating and explanation	K2 - Lower order question. The candidate must remember which area radiation monitors are Technical Specification items.
Distracter explanation and references	A. Incorrect - This monitor is not a Technical Specification item. It is a plausible distractor because it is an area monitor. B. Incorrect - This monitor is not a Technical Specification item. It is a plausible distractor because it is an area monitor. C. Correct - This area radiation is covered by Technical Specification 3.3.3.1. It is required when fuel is in the spent fuel pool. D. Incorrect - This monitor is not a Technical Specification item. It is a plausible distractor because it is an area monitor.
NRC ES-401 Tier and section location	SRO: Tier 1 Group 2
Question original source	NEW
Additional comments	

Question 083

Which one of the following area radiation monitors could require entrance into a Technical Specification action statement if the monitor was inoperable.

A. SD RE-043 TSC area monitor

B. SD RE-044 EOF area monitor

C. SD RE-037 Bridge crane area monitor

D. SD RE-26 RHR heat exchanger area monitor

Question Number	084
Question	A large break LOCA is in progress. Containment (CTMT) pressure went to 23 psig and is currently reading 4.2 psig. CTMT radiation went to 10^6 R/Hr and is currently reading10^3 R/Hr. No assessments have been completed yet. Adverse CTMT values: A. must be used until plant staff determines integrated dose is less than 10^6 R. B. can be returned to normal because CTMT pressure is less than 5.0 psig. C. must be used until plant staff performs an evaluation of CTMT pressure effects. D. can be returned to normal because CTMT radiation is less then 10^5 R/Hr.
Answer	A. must be used until plant staff determines integrated dose is less than 10^6 R.
Allowed references	None
LP and objective	LO1610702, Rev. 002, Obj. 5
WCGS procedure - print references	EMG F-0
NRC KA Topic	W/E16 EA2.2 Ability to determine and interpret the following as they apply to the (High Containment Radiation): Adherence to appropriate procedures and operation within the limitations in the facility's license and amendments.
NRC KA topic importance factors	3.0/3.3
NRC 1122 KA - 10CFR55 41/43 tie	43.5/45.13
NRC difficulty rating	N/A
WCGS difficulty rating and explanation	K3 - Lower order question. The candidate must look at plant conditions encountered during this accident and recall which set of setpoints would apply under these conditions.
Distracter explanation and references	A. Correct - The operator can return to normal setpoints after containment pressure is less than 5.0 psig but if radiation levels exceeded 10^5 R/Hr then plant staff must determine that integrated radiation dose is less than 10^6 R. B. Incorrect - The operator can return to normal setpoints after containment pressure is less than 5.0 psig but if radiation levels exceeded 10^5 R/Hr then plant staff must determine that integrated radiation dose is

	less than 10^6R. This is a plausible distracter because it is partially correct. C. Incorrect - The operator can return to normal setpoints after containment pressure is less than 5.0 psig but if radiation levels exceeded 10^5 R/Hr then plant staff must determine that integrated radiation dose is less than 10^6 R. This is a plausible distracter because radiation does require an evaluation before returning to normal parameters. D. Incorrect - The operator can return to normal setpoints after containment pressure is less than 5.0 psig but if radiation levels exceeded 10^5 R/Hr then plant staff must determine that integrated radiation dose is less than 10^6 R. This is a plausible distracter because it is partially correct.
NRC ES-401 Tier and section location	SRO Tier 1 Group 2
Question original source	New
Additional comments	NRC Comment - Add that no assessments have done yet. Answer - Revise stem to reflect that no assessments have been completed yet.

Question: 084

A large break LOCA is in progress. Containment (CTMT) pressure went to 23 psig and is currently reading 4.2 psig. CTMT radiation went to 10^6 R/Hr and is currently reading10^3 R/Hr. No assessments have been completed yet.

Adverse CTMT values:

A. must be used until plant staff determines integrated dose is less than 10^6 R.

B. can be returned to normal because CTMT pressure is less than 5.0 psig.

C. must be used until plant staff performs an evaluation of CTMT pressure effects.

D. can be returned to normal because CTMT radiation is less then 10^5 R/Hr.

Question Number	085
Question	Wolf Creek is in Mode 3 maintaining NOP and NOT. All systems are in Automatic and normal configuration except for the: Turbine Driven Aux Feed Pump is in service supplying Steam Generators. SG Atmospheric Relief Valves are maintaining RCS temperature A sudden and complete loss of Instrument Air has occured. Which of the following will be an immediate effect of this failure? A. Pressurizer Level decreasing B. VCT Level decreasing C. RCS Temperature increasing D. SG Level increasing
Answer	B. VCT Level decreasing
Allowed references	None
LP and objective	SY1407800, Rev. 003, Obj. 1, 5
WCGS procedure - print references	OFN KA-019
NRC KA Topic	065 AK3.04 Knowledge of the reasons for the following responses as they apply to the loss of instrument air: cross-over to backup air supplies.
NRC KA topic importance factors	3.0/3.2
NRC 1122 KA - 10CFR55 41/43 tie	41.5/41.10/45.6/45.13
NRC difficulty rating	Not Available
WCGS difficulty rating and explanation	A3 - The candidate must know the effects of a loss of Instrument Air on various valves in various systems. He must also know which systems have backup accumulators for emergency operation. He then must apply that knowledge to the system level to determine the proper response.
Distracter explanation and references	A. Incorrect - All valves leading into the RCS from the charging system fail open so the PZR level will increase due to charging continuing and letdown isolating. Credible in that the candidate knows these are air operated valves and may assume they go closed to a fail safe position as the charging header isolates on a Safety Injection(through motor operated valves however). B. Correct - Letdown isolation valves will close upon loss of air. They have no accumulator backup supply. As such the VCT level will drop as charging continues into the RCS without makeup to the VCT from letdown due to the isolation. C. Incorrect - SG ARV's fail closed. They have a N2 accumulator backup supply so they are not lost immediately. This is a good distractor because these valves are normally air operated and if they were to fail closed RCS temperature would increase. D. Incorrect - AFW valves are supplied with a N2 backup accumulator so they are not lost immediately. Therefore SG level will not change. This is a good distracter because they are normally air operated.
NRC ES-401 Tier and section location	SRO: Tier 1 Group 2
Question original source	New
Additional comments	

Question 085

Wolf Creek is in Mode 3 maintaining NOP and NOT. All systems are in Automatic and normal configuration except for the:

Turbine Driven Aux Feed Pump is in service supplying Steam Generators.
SG Atmospheric Relief Valves are maintaining RCS temperature

A sudden and complete loss of Instrument Air has occurred.

Which of the following will be an immediate effect of this failure?

A. Pressurizer Level decreasing

B. VCT Level decreasing

C. RCS Temperature increasing

D. SG Level increasing

Question Number	086
Question	The Unit is operating at 100% power with all systems in their at-power normal configurations. If the Source Range High Voltage (HV) Manual control switch for N-31 is placed in the "ON" position, N-31 High Voltage will ___(1)___, the high flux Rx trip status light will ___(2)___, and a Rx Trip ___(3)___ occur. (1) (2) (3) A. remain off remain off will not B. turn on remain off will not C. turn on turn on will not D. turn on turn on will
Answer	C
Allowed references	None
LP and objective	SY1301501, Rev. 007, Obj. 3
WCGS procedure - print references	M-744-0020
NRC KA Topic	015 K4.01 Knowledge of NIS design feature(s) and/or interlock(s) provide for the following: source range detector power shutoff at high powers.
NRC KA topic importance factors	3.1/3.3
NRC 1122 KA - 10CFR55 41/43 tie	41.7
NRC difficulty rating	N/A
WCGS difficulty rating and explanation	K3 - Lower order question. The candidate must recall the source range circuit including details of the affect of the high voltage control switch on the detector, the trip status light, and the reactor trip circuit. This is a level 3 based on the amount of detailed knowledge required on this circuit.
Distracter explanation and references	A. Incorrect - The circuit will re-energize the source range channel and with flux level above the bistable setpoint, the status light will illuminate. The reactor will not trip because P-6 and P-10 blocks are still in. This is a plausible distracter if the candidate doesn't know that the source range high voltage switch bypasses the high voltage P-6 and P-10 blocks. B. Incorrect - The circuit will re-energize the source range channel and with flux level above the bistable setpoint, the status light will illuminate. The reactor will not trip because P-6 and P-10 blocks are still in. This is a plausible distracter if the candidate doesn't know that the P-6 and P-10 blocks do not affect the bistable light. C. Correct - The circuit will re-energize the source range channel and with flux level above the bistable setpoint, the status light will illuminate. The reactor will not trip because P-6 and P-10 blocks are still in.

	D. Incorrect - The circuit will re-energize the source range channel and with flux level above the bistable setpoint, the status light will illuminate. The reactor will not trip because P-6 and P-10 blocks are still in. This is a plausible distracter if the candidate doesn't know that the P-6 and P-10 blocks prevent the reactor trip.
NRC ES-401 Tier and section location	RO: Tier 2 Group 1
Question original source	Exam Bank
Additional comments	

Question: 086

The Unit is operating at 100% power with all systems in their at-power normal configurations.

If the Source Range High Voltage (HV) Manual control switch for N-31 is placed in the "ON" position, N-31 High Voltage will ___(1)___, the high flux Rx trip status light will ___(2)___, and a Rx Trip ___(3)___ occur.

	(1)	(2)	(3)
A.	remain off	remain off	will not
B.	turn on	remain off	will not
C.	turn on	turn on	will not
D.	turn on	turn on	will

Question Number	087
Question	Wolf Creek is in Mode 5 with the water level below the top of the Reactor Vessel flange. The Reactor Vessel Head is on. What is the basis for having Safety Injection pumps available while in this condition. A. To mitigate the affects of a loss of decay heat removal. B. To ensure a mass addition accident can be relieved by a single RHR suction valve. C. To ensure a mass addition accident can be relieved by a single PORV. D. To mitigate the effects of an inoperable Centrifugal Charging pump caused by gas binding at reduced Inventory levels.
Answer	A
Allowed references	None
LP and objective	SY1300600, Rev. 004, Obj. 13
WCGS procedure - print references	Technical Specification 3.5.4
NRC KA Topic	006 2.2.25 Knowledge of bases in technical specifications for limiting conditions for operations and safety limits.
NRC KA topic importance factors	2.5/3.7
NRC 1122 KA - 10CFR55 41/43 tie	43.2
NRC difficulty rating	N/A
WCGS difficulty rating and explanation	K2 - Lower order question. The candidate must recall the bases for Technical Specification 3.5.4.
Distracter explanation and references	A. Correct - With the water level not above the top of the reactor vessel flange and with the vessel head on, safety injection pumps may be available to mitigate the affects of a loss of decay heat removal during a reduced RCS inventory condition. B. Incorrect - Safety injection pumps may be available to mitigate the affects of a loss of decay heat removal during a reduced RCS inventory condition. This is a plausible distracter because it is part of the reason for limiting the number of charging pumps to one in modes 4, 5, & 6. C. Incorrect - Safety injection pumps may be available to mitigate the affects of a loss of decay heat removal during a reduced RCS inventory condition. This is a plausible distracter because it is part of the reason for limiting the number of charging pumps to one in modes 4, 5, & 6. D. Incorrect - Safety injection pumps may be available to mitigate the affects of a loss of decay heat removal during a reduced RCS inventory condition. This is a plausible distracter because gas binding of charging pumps has been a past nuclear problem.
NRC ES-401 Tier and section location	SRO: Tier 2 Group 2
Question original source	Exam Bank

Additional comments	

Question: 087

Wolf Creek is in Mode 5 with the water level below the top of the Reactor Vessel flange. The Reactor Vessel Head is on.

What is the basis for having Safety Injection pumps available while in this condition.

A. To mitigate the affects of a loss of decay heat removal.

B. To ensure a mass addition accident can be relieved by a single RHR suction valve.

C. To ensure a mass addition accident can be relieved by a single PORV.

D. To mitigate the effects of an inoperable Centrifugal Charging pump caused by gas binding at reduced Inventory levels.

Question number	088
Question	While performing a routine plant inspection in the auxiliary building you see a company executive escorting five visitors. The company executive wants to transfer visitor responsibility to you for 1 hour while he leaves for a meeting. You meet all requirements to be a visitor escort. To transfer escort responsibilities, you must: A. return to security for them to process a change of escort responsibility. B. exit the RCA before transferring escort responsibilities. C. call security and notify them that a change of escort is taking place. D. perform the transfer at the present location and take control of the visitors.
Answer	B. exit the RCA before transferring escort responsibilities.
Allowed references	None
LP and objective	GT1245005, Rev. 003 Sect. 7
WCGS procedure - print references	N/A
NRC KA Topic	2.1.13 Knowledge of the facility requirements for controlling vital/controlled access.
NRC KA topic importance factors	2.0/2.9
NRC 1122 KA 10CFR 41/43 tie	41.10/43.5/45.9/45.10
NRC difficulty rating	N/A
WCGS difficulty rating and explanation	K2 - Lower order question. The candidate must recall visitor escort transfer rules and know that a transfer cannot be made in the RCA.
Distracter explanation and references	A. Incorrect - This is incorrect because security is only notified to process visitors into the controlled area, out of the controlled area, and if there is a problem with a visitor. This is a plausible distractor because security is used for the above escort B. Correct - Transferring escort responsibilities is not permitted inside the RCA. C. Incorrect - This is incorrect because security is only notified to process visitors into the controlled area, out of the controlled area, and if there is a problem with a visitor. This is a plausible distractor because security is used for the above escort functions. D. Incorrect - Transferring escort responsibilities is not permitted inside the RCA. This is a plausible distractor because escort responsibility are

	usually performed at the location where the present and new escort meet. This can be any plant area except the RCA.
NRC ES-401 Tier and section location	SRO: Tier 3
Question original source	New
Additional comments	NRC Comment - Clarify that you are in the auxiliary building. Answer - Revise the first sentence of the stem to reflect the auxiliary building location.

Question: 088

While performing a routine plant inspection in the auxiliary building you see a company executive escorting five visitors. The company executive wants to transfer visitor responsibility to you for 1 hour while he leaves for a meeting. You meet all requirements to be a visitor escort.

To transfer escort responsibilities you must:

A. return to security for them to process a change of escort responsibility.

B. exit the RCA before transferring escort responsibilities.

C. call security and notify them that a change of escort is taking place.

D. perform the transfer at the present location and take control of the visitors.

Question Number	089
Question	A fire in the main control room has forced a control room evacuation. The crew is in the process of performing OFN RP-017, "Control Room Evacuation". When the control room is evacuated the Shift Supervisor will: A. proceed to NB02 switchgear room and ensure Train B pump breakers are open then proceed to ASP. B. proceed to the ASP via CAS and obtain pocket ion chambers from the emergency locker. C. proceed to the ASP via CAS and announce the control room fire using plant Gaitronics. D. proceed to the AFW corridor and obtain emergency radio with channel 4 selected then proceed to the ASP.
Answer	C
Allowed references	None
LP and objective	LO1732427, Rev. 005, Obj. 4
WCGS procedure - print references	OFN RP-017, Step 6
NRC KA Topic	2.1.14 Knowledge of system status criteria which require the notification of plant personnel.
NRC KA topic importance factors	2.5/3.3
NRC 1122 KA - 10CFR55 41/43 tie	43.5/45.12
NRC difficulty rating	Not Available
WCGS difficulty rating and explanation	K2 - Lower order question. The candidate must recall the Shift Supervisor responsibilities from OFN RP-017.
Distracter explanation and references	A. Incorrect - This is not listed as a Shift Supervisor responsibility. This is a plausible distracter because it is the Reactor Operators OFN RP-017 responsibility and the Shift Supervisor goes to the ASP. B. Incorrect - This is not listed as a Shift Supervisor responsibility. This is a plausible distracter because it is the Supervising Operators OFN RP-017 responsibility. C. Correct - OFN RP-017, Step 6, lists this as one of the responsibilities of the Shift Supervisor. D. Incorrect - This is not listed as a Shift Supervisor responsibility. This is a plausible distracter because it is the operator performing turbine building actions OFN RP-017 responsibility and the Shift Supervisor goes to the ASP.
NRC ES-401 Tier and section location	SRO: Tier 3
Question original source	New
Additional comments	

Question 089

A fire in the main control room has forced a control room evacuation. The crew is in the process of performing OFN RP-017, "Control Room Evacuation". When the control room is evacuated the Shift Supervisor will:

A. proceed to NB02 switchgear room and ensure Train B pump breakers are open then proceed to ASP.

B. proceed to the ASP via CAS and obtain pocket ion chambers from the emergency locker.

C. proceed to the ASP via CAS and announce the control room fire using plant Gaitronics.

D. proceed to the AFW corridor and obtain emergency radio with channel 4 selected then proceed to the ASP.

Question Number	090
Question	During a normal RCS cooldown the following data was recorded for the loop with the lowest temperatures. Time / THOT(°F) / TCOLD (°F) / TAVE (°F) 0430 / 372 / 368 / 370 0500 / 362 / 358 / 360 0530 / 352 / 348 / 350 0600 / 342 / 338 / 340 0630 / 332 / 328 / 330 0700 / 322 / 318 / 320 Which of the following is the latest time frame that the required number of charging pumps would have their motor circuit breakers secured in the open position to comply with Technical Specifications? A. Between 0500 and 0530. B. Between 0530 and 0600. C. Between 0630 and 0700. D. Between 0900 and 0930.
Answer	C
Allowed references	None
LP and objective	SY1300600, Rev. 004, Obj. 13
WCGS procedure - print references	GEN 00-006 Step 6.35 Tech Spec 4.5.3.2
NRC KA Topic	2.1.12 Ability to apply technical specifications for a system.
NRC KA topic importance factors	4.0
NRC 1122 KA - 10CFR55 41/43 tie	43.2/43.5/45.3
NRC difficulty rating	Not Available
WCGS difficulty rating and explanation	A3 - Higher order question. This requires the candidate to recall the applicable Technical Specification requirements. The RCS temperature versus time data must then be analyzed to determine which answer time frame is correct.
Distracter explanation and references	A. Incorrect - This takes the unit to 350°F but not below to mode 4. Plausible because it takes the RCS to the point to enter mode 4. B. Incorrect - This takes the RCS to less than 350°F but does not meet the 325°F or four hour requirement. Plausible because it is the time frame to enter mode 4. C. Correct - Tech Spec 4.5.3.2 requires that the motor circuit for one of the CCPs be secured in the open position within 4 hours of entering mode 4 and prior to one of the cold legs going below 325°F. This is the correct time frame because the cold legs are going below 325°F. D. Incorrect - This answer is incorrect since cold legs are going below 325°F between 0630 and 0700. It is plausible because it would meet the four hour Technical Specification criteria after entry into mode 4, if cold leg

	temperatures were not less than 325°F.
NRC ES-401 Tier and section location	SRO: Tier 3 Group 3
Question Source	Exam Bank
Additional comments	

Question 090

During a normal RCS cooldown the following data was recorded for the loop with the lowest temperatures.

Time	THOT(°F)	TCOLD (°F)	TAVE (°F)
0430	372	368	370
0500	362	358	360
0530	352	348	350
0600	342	338	340
0630	332	328	330
0700	322	318	320

Which of the following is the latest time frame that the required number of charging pumps would have their motor circuit breakers secured in the open position to comply with Technical Specifications?

A. Between 0500 and 0530.

B. Between 0530 and 0600.

C. Between 0630 and 0700.

D. Between 0900 and 0930.

Question Number	091
Question	The reactor operator has written an On The Spot Change (OTSC) on SYS PQ-120, AC Uninterruptible Power System Startup, for immediate use. It requires which of the following signatures, as a minimum, before it can be used? A. Wolf Creek Nuclear Operation Corporation (WCNOC) staff member (reactor operator) and the Shift Supervisor. B. WCNOC staff member (reactor operator), Shift Supervisor, and responsible manager. C. WCNOC staff member (reactor operator), Shift Supervisor, and call superintendent. D. WCNOC staff member (reactor operator) and PQ system engineer.
Answer	A
Allowed references	None
LP and objective	LO1733203, Rev. 006, Obj. 5
WCGS procedure - print references	AP 15C-004
NRC KA Topic	2.2.6 Knowledge of the process for making changes in procedures as described in the safety analysis report.
NRC KA topic importance factors	3.3
NRC 1122 KA - 10CFR55 41/43 tie	43.3/45.13
NRC difficulty rating	Not Available
WCGS difficulty rating and explanation	K2 - Lower order question. The candidate must recall the specific approval required by the administrative procedures.
Distracter explanation and references	A. Correct - This change must be approved, as a minimum, by two cognizant members of the plant staff. At least one of these people shall be a member of supervision in the organization responsible for the procedure. For operations procedures, at least one shall be holding a current SRO license. B. Incorrect - This answer is incorrect because it list more signatures than are required for the minimum. This is a plausible distracter because the responsible manager does provide final approval but the OTSC is already in use. C. Incorrect - This answer is incorrect because it list more signatures than are required for the minimum. This is a plausible distracter because the call superintendent does provide approval on administrative control procedures. This is not required in this case because the subject procedure is an operations procedure. D. Incorrect - This answer is incorrect because it does not include a SRO signature. This is a plausible distracter because both staff members would be knowledgeable of the system.
NRC ES-401 Tier and section location	SRO: Tier 3
Question original source	Modified Exam Bank
Additional comments	

Question 091

The reactor operator has written an On The Spot Change (OTSC) on SYS PQ-120, AC Uninterruptible Power System Startup, for immediate use.

It requires which of the following signatures, as a minimum, before it can be used?

A. Wolf Creek Nuclear Operation Corporation (WCNOC) staff member (reactor operator) and the Shift Supervisor.

B. WCNOC staff member (reactor operator), Shift Supervisor, and responsible manager.

C. WCNOC staff member (reactor operator), Shift Supervisor, and call superintendent.

D. WCNOC staff member (reactor operator) and PQ system engineer.

Question number	092
Question	The Unit is at 60% Reactor Power with pressurizer level instrument BB LI-459 out of service. All of the required actions for this instrument failure have been completed. The surveillance for BB LI-460 is about to become late. The Supervising Operator will: A. Declare BB LI-460 inoperable but delay action requirements for 24 hours to allow restoring BB LI-459. B. Continue plant operation and submit LER on missed surveillance. C. Bypass BB LI-459 and perform required surveillance on BB LI-460. D. Bypass BB LI-459 and declare BB LI-460 inoperable.
Answer	C
Allowed References	None
LP and Objective	LO 17 327 02
WCGS procedure - print references	T/S 3.3.1 table 3.3-1, Functional Unit 11, Action 6#
NRC KA topic	2.2.21 Knowledge of pre- and post maintenance operability requirements
NRC KA topic importance factors	3.5
NRC 1122 KA 10CRF 41/43 tie	43.2
NRC difficulty rating	Not available
WCGS difficulty rating and explanation	A-3 Higher order question. The student must evaluate the given plant conditions involving the instruments before applying the provisions of technical specifications to the setting. Level difficulty three. The individual must recognize that the provisions of technical specifications apply. Then recall how the failed instrument would be placed in a trip condition which precludes testing the second instrument. The distracters offer plausible choices to the individual all of which are related to actions found in technical specifications. This raises the difficulty for the student as he must differentiate between the distracters.
Distracter explanation and references	A. Incorrect - This response is tied to the provisions of TS 3.0.3. This is a plausible distractor because for many other TS this is the control room response to similar problems. In this case, this does not apply because the TS has specific provisions for continuing testing of the instrument channels. B. Incorrect - The failed instrument may be bypassed for 4 hours only to allow performance of required surveillance's. This is plausible in that this is a required response for certain failures. C. Correct - The failed instrument may be bypassed for 4 hours to allow performance of required STSs. D. Incorrect - If a surveillance is not performed the instrument is inoperable and Tech Spec 3.0.3 must be applied. Plausible in that 459 will be bypassed but this allow you to perform the surveillance on 460 vice allow it to go inoperable.

NRC ES-401 Tier and section location	SRO: Tier 3
Question original source	Wolf Creek Feb 98
Additional comments	

Question 092

The Unit is at 60% Reactor Power with pressurizer level instrument BB LI-459 out of service. All of the required actions for this instrument failure have been completed. The surveillance for BB LI-460 is about to become late.

The Supervising Operator will:

A. Declare BB LI-460 inoperable but delay action requirements for 24 hours to allow restoring BB LI-459.

B. Continue plant operation and submit LER on missed surveillance.

C. Bypass BB LI-459 and perform required surveillance on BB LI-460.

D. Bypass BB LI-459 and declare BB LI-460 inoperable.

Question number	093
Question	Initial conditions: • Unit has shutdown for refueling • "A" train RHR is out of service • "B" train RHR is operable and in service • Refueling Pool level is greater than 23 feet above the flange • Refueling operations are in progress During the last 24 hour period the operating RHR train was secured to ease the loading of fuel around the hot legs at: • 0050 to 0120 RHR pump B secured • 1030 to 1130 RHR pump B secured At 1700 the refueling SRO requests that the B RHR pump be secured to load fuel in the area of the hot leg. You are the supervising operator and order the RHR Pump to be: A. Left running because 8 hours has not passed since the last time the pump was secured. B. Secured but note that the pump must be restarted in no more than one hour. C. Secured but note that the pump must be restarted in no more than 2 hours. D. Secured but note that the pump must be restarted in no more than 30 minutes.
Answer	A
Allowed references	None
LP and objective	SY1300500, Rev. 004, Obj. 9
WCGS procedure - print references	Technical Specification 3.9.8.1
NRC KA Topic	2.2.25 Knowledge of bases in Technical Specifications for limiting conditions for operations and safety limits.
NRC KA topic importance factors	3.7
NRC 1122 KA 10CFR 41/43 tie	43.2/
NRC difficulty rating	NA
WCGS difficulty rating and explanation	A-4 Higher order question. The student must identify what evolutions were in progress, then apply the technical specification rule to the request. Level difficulty four. The students must interpret the RHR pump running history and calculate the current plant status. Then evaluate the request from the refueling SRO based on his application of the technical specification. The distracters plausibility and the infrequent use of the technical specification increased the question difficulty.
Distracter explanation and references	A. Correct - The pump can be secured if the crew waits until 8 hours has elapsed B. Incorrect - If the pump was secured the RHR system will be secured for more than 1 hour in 8 hours. This is a plausible distracter because the pump can be stopped for 1 hour when allowed. C. Incorrect - The time limit is one hour in eight not four hours. This is a plausible distracter because Technical Specification 3.9.8.2 allows RHR to

	be stopped 1 out of 2 hours prior to initial criticality. D. Incorrect - The time of 30 minutes given was used in case an examinee felt that time the pump could be secured could be accumulated. This is a plausible distracter since only 1.5 hours of secured time exists for the last 16 hours.
NRC ES-401 Tier and section location	SRO: Tier 3 category 2
Question original source	Wolf Creek Feb. 1998 NRC Exam
Additional comments	.

Question 093

Initial conditions:

- Unit has shutdown for refueling
- "A" train RHR is out of service
- "B" train RHR is operable and in service
- Refueling Pool level is greater than 23 feet above the flange
- Refueling operations are in progress

During the last 24 hour period the operating RHR train was secured to ease the loading of fuel around the hot legs at:

- 0050 to 0120 RHR pump B secured
- 1030 to 1130 RHR pump B secured

At 1700 the refueling SRO requests that the B RHR pump be secured to load fuel in the area of the hot leg.

You are the supervising operator and order the RHR Pump to be:

A. Left running because 8 hours has not passed since the last time the pump was secured.

B. Secured but note that the pump must be restarted in no more than one hour.

C. Secured but note that the pump must be restarted in no more than 2 hours.

D. Secured but note that the pump must be restarted in no more than 30 minutes.

Question Number	094
Question	Given the following: • The Unit is in a refueling outage. • Core on-load is almost complete. • The refueling crew in the Fuel Building is moving a fuel element through the gate that separates the spent fuel pool and the fuel transfer canal. • The refueling SRO notices that cavity level is slowly DECREASING. Based on the above information, the suspended fuel element should be: A. placed in the reactor vessel. B. returned to the Spent Fuel Pool. C. lowered into the fuel transfer cart and left on the Fuel Bldg side. D. placed in the Rod Control Cluster Assembly (RCCA) change fixture.
Answer	B. returned to the Spent Fuel Pool.
Allowed references	None
LP and objective	LO1732428
WCGS procedure - print references	OFN KE-018 Fuel Handling Accident
NRC KA Topic	2.2.27 Knowledge of the refueling process
NRC KA topic importance factors	3.5
NRC 1122 KA - 10CFR55 41/43 tie	43.6/45.13
NRC difficulty rating	Not Available
WCGS difficulty rating and explanation	K3 The operator must recognize that the assembly is on the Fuel Pool side and remember the correct safe position called for in the procedure.
Distracter explanation and references	A. Incorrect: This is the correct response for assemblies already in the Refueling Pool. Credible in that it is a response to this accident if the assembly were in the refueling cavity. B. Correct: This is the safe storage area in the Fuel Handling Building. C. Incorrect: The procedure calls for a safe storage location. The Upender is not a storage location and in the event of a loss of Refueling Pool Level in which the SFP Gate Valve could not be closed would result in excessive exposure. Credible in that it is a location to which the operator is currently trying to go to and would allow the operator to disengage the assembly. D. Incorrect: The RCCA change fixture is not a safe storage are in the Fuel Handling Building. Credible in that it is a location in which fuel can be placed.

NRC ES-401 Tier and section location	SRO: Tier 3
Question original source	North Anna-99
Additional comments	NRC comment - Does not discriminate for SRO level. Answer - Replaced the question. Reworded Fuel Handling Building to Fuel Building. Deleted "Weir".

Question: 094

Given the following:

- The Unit is in a refueling outage.
- Core on-load is almost complete.
- The refueling crew in the Fuel Handling Building (FHB) is moving a fuel element through the weir gate that separates the spent fuel pool and the fuel transfer canal.
- The refueling SRO notices that cavity level is slowly DROPPING.

Based on the above information, the suspended fuel element should be:

A. placed in the reactor vessel.

B. returned to the Spent Fuel Pool.

C. lowered into the fuel transfer cart and left on the FHB side.

D. placed in the Rod Control Cluster Assembly (RCCA) change fixture.

Question number	095
Question	Which one of the following control rod drive operational modes will produce the fastest rod speed? A. Manual. B. Shutdown Bank "A". C. Control Bank "B". D. Automatic with a 4.5°F temperature error.
Answer	B. Shutdown Bank "A".
Allowed references	None
LP and objective	SY1300100, Rev 008, Obj. 7 & 8
WCGS procedure - print references	N/A
NRC KA Topic	2.2.33 Knowledge of control rod programming.
NRC KA topic importance factors	2.9
NRC 1122 KA 10CFR 41/43 tie	43.6
NRC difficulty rating	N/A
WCGS difficulty rating and explanation	A3 - Higher order question. The candidate must recall rod speed in each control rod selector switch position. This also requires a calculation of automatic control rod speed with a 4.5°F temperature error.
Distracter explanation and references	A. Incorrect - Manual rod speed moves the control banks at 48 SPM. This is a plausible distracter because it is a rod selector switch position. B. Correct - This is the fastest rod speed at 64 SPM. C. Incorrect - Control bank B moves that bank at 48 SPM. This is a plausible distracter because it is a rod selector switch position. D. Incorrect - Automatic control with a 4.5°F mismatch moves at 56 SPM. This is a plausible distracter because it is a rod selector switch position and has a possibility of speeds from 8 spm to 72 spm..
NRC ES-401 Tier and section location	SRO: Tier 3
Question original source	Modified Exam Bank
Additional comments	NRC Comment - "D" appears to be beyond expected recall knowledge. Answer - We believe that the SRO understands the rod speed program and can calculate the speed in various rod control selector positions.

Question: 095

Which one of the following control rod drive operational modes will produce the fastest rod speed?

A. Manual.

B. Shutdown Bank "A".

C. Control Bank "B".

D. Automatic with a 4.5°F temperature error.

Question number	096
Question	If all conditions are satisfactory, liquid radiological releases are approved by the: A. Operations Radwaste Supervisor. B. Manager Chemistry. C. Shift Supervisor. D. Manager Operations
Answer	C
Allowed references	None
LP and objective	SY1406900, Rev. 002, Obj. 10
WCGS procedure - print references	AP 07B-001 Step 5.7
NRC KA Topic	2.3.6 Knowledge of the requirements for reviewing and approving release permits.
NRC KA topic importance factors	3.1
NRC 1122 KA 10CFR 41/43 tie	43.4/45.10
NRC difficulty rating	None Available
WCGS difficulty rating and explanation	K-2 Lower order question. Student must recall who approves radiological releases. Difficulty level two.
Distracter explanation and references	A. Incorrect - Radwaste group staff is not in the approval chain. This is a plausible distracter since this group processes and stores radwaste. B. Incorrect - Staff and supervisors are in the approval chain, but the manager is not in the approval requirement path. This is a plausible distracter because chemistry personnel are in the approval chain. C. Correct - Per AP 07B-001 step 5.7.2 D. Incorrect - The Manager of Operations is not in the approval chain for releases. This is a plausible distracter because the manager of chemistry/radiation protection has responsibilities if the release is in excess of ODCM limits.
NRC ES-401 Tier and section location	SRO: Tier 3
Question original source	Wolf Creek Feb. 1998 NRC Exam
Additional comments	

Question 096

If all conditions are satisfactory, liquid radiological releases are approved by the:

A. Operations Radwaste Supervisor.
B. Manager Chemistry.
C. Shift Supervisor.
D. Manager Operations

Question Number	097
Question	The Radwaste Building Vent Systems Noble Gas Activity Monitor, GH-RE-10B, is out of service. Gas Decay Tank #1, THA01A, is to be released. What action will enable the release of the tank with the monitor out of service? A. The Gas Decay tank must be released within 30 days of sampling. B. Two independent samples for Gas Decay Tank #1 contents must be analyzed. C. A Senior Reactor Operator must confirm release rate calculations and valve alignment prior to release. D. Both the Radwaste Building Supply and Exhaust Fans must be running.
Answer	B. Two independent samples for Gas Decay Tank #1 contents must be analyzed.
Allowed references	None
LP and objective	SY 1407100 Waste Gas System Objective 7
WCGS procedure - print references	Offsite Dose Calculation Manual AP 07B-003
NRC KA Topic	2.3.8 Knowledge of the process for performing a planned gaseous radioactive release.
NRC KA topic importance factors	3.2
NRC 1122 KA - 10CFR55 41/43 tie	43.4/45.10
NRC difficulty rating	Not Available
WCGS difficulty rating and explanation	K2 The candidate must recall the specific requirements to perform a gaseous release without the Noble Gas monitor operable.
Distracter explanation and references	A. Incorrect: The tank needs to be released within 14 days. Credible in that 30 days is used frequently for limitations on continuous flow releases. B. Correct. Two independent samples are required to be analyzed. C. Incorrect: At least two technically qualified members of the facility staff independently verify the release rate calculations and discharge valve lineup. SRO's are not technically qualified to verify chemistry calculations. Credible in that they would verify or have verified the valve lineup and need to verify that the calculations have been performed. D. Incorrect: This is a special precaution which may be selected by the Chemistry Technician when filling out the release form but is not required by the ODCM. Credible in that this is Special Precaution

	on the existing form that is not normally selected but is available for the Chemistry Technician to use as needed.
NRC ES-401 Tier and section location	RO: Tier 3 Group 3
Question original source	New
Additional comments	NRC comment - Does not discriminate for SRO. Answer - Replaced the question.

Question: 097

The Radwaste Building Vent Systems Noble Gas Activity Monitor, GH-RE-10B, is out of service. Gas Decay Tank #1, THA01A, is to be released.

What action will enable the release of the tank with the monitor out of service?

A. The Gas Decay tank must be released within 30 days of sampling.

B. Two independent samples for Gas Decay Tank #1 contents must be analyzed.

C. A Senior Reactor Operator must confirm release rate calculations and valve alignment prior to release.

D. Both the Radwaste Building Supply and Exhaust Fans must be running.

Question Number	098
Question	The unit has experienced a large break LOCA. The operators have just transitioned to EMG ES-12, "Transfer to Cold Leg Recirculation" due to the low water level in the RWST. The following conditions are reported by the STA after SI is reset in EMG ES-12. • A containment orange path exists due to containment pressure being 29 psig. • An integrity red path exists due to RCS conditions to the left of limit A. • RHR pump "B" has tripped on overcurrent. • All other systems are functioning as designed. What course of action should the operator take? A. Immediately transition to EMG FR-P1, "Response to Imminent Pressurized Thermal Shock", Step 1. B. Complete the alignment to cold leg recirculation and then transition to FR-Z1, "Response to High Containment Pressure", Step 1. C. Immediately transition to EMG FR- Z1, "Response to High Containment Pressure", Step 1. D. Complete the alignment to cold leg recirculation and then transition to FR-P1, "Response to Imminent Pressurized Thermal Shock," Step 1.
Answer	D
Allowed references	None
LP and objective	LO1732322, Rev. 008, Obj. 3
WCGS procedure - print references	EMG ES-12, Note prior to Step 1, EMG F-0
NRC KA Topic	2.4.16 Knowledge of EOP implementation hierarchy and coordination with support procedures.
NRC KA topic importance factors	4.0
NRC 1122 KA - 10CFR55 41/43 tie	41.10/43.5/45.13
NRC difficulty rating	Not Available
WCGS difficulty rating and explanation	A3- Higher order question. The candidate must recall the hierarchy of procedure use for the functional restoration procedures. Plant parameter information must be analyzed with specific knowledge of step requirements contained in EMG ES-12. The results are applied to the use of procedures.
Distracter explanation and references	A. Incorrect - This contradicts the note in ES-12 telling the operator to complete the cold leg recirculation lineup prior to implementing any FR procedures. This is a plausible distracter because it is the highest level red path. B. Incorrect - This contradicts the note in ES-12 telling the operator to complete the cold leg recirculation lineup prior to implementing any FR procedures. This is a plausible distracter because it completes the alignment to cold leg recirculation before implementing the FR procedures. C. Incorrect - This contradicts the note in ES-12 telling the operator to complete the cold leg recirculation lineup prior to implementing any FR procedures. This is a plausible distracter because it is a red path. D. Correct - The note prior to EMG ES-12, Step 1 provides the guidance to

	complete cold leg recirculation lineup prior to performing any FR procedures.
NRC ES-401 Tier and section location	SRO: Tier 3
Question original source	Modified Exam Bank
Additional comments	

Question 098

The unit has experienced a large break LOCA. The operators have just transitioned to EMG ES-12, "Transfer to Cold Leg Recirculation" due to the low water level in the RWST.

The following conditions are reported by the STA after SI is reset in EMG ES-12.

- A containment orange path exists due to containment pressure being 29 psig.
- An integrity red path exists due to RCS conditions to the left of limit A.
- RHR pump "B" has tripped on overcurrent.
- All other systems are functioning as designed.

What course of action should the operator take?

A. Immediately transition to EMG FR-P1, "Response to Imminent Pressurized Thermal Shock", Step 1.

B. Complete the alignment to cold leg recirculation and then transition to FR- Z1, "Response to High Containment Pressure", Step 1.

C. Immediately transition to EMG FR- Z1, "Response to High Containment Pressure", Step 1.

D. Complete the alignment to cold leg recirculation and then transition to FR-P1, "Response to Imminent Pressurized Thermal Shock," Step 1.

Question Number	099
Question	A reactor trip and safety injection has occurred. The operators are performing EMG E-0. The Supervising Operator is verifying turbine trip when the STA reports a red path on Heat Sink. The crew will: A. Transition to EMG FR-H1, "Response to Loss of Secondary Heat Sink" when E-0 immediate action verification is complete. B. Immediately transition to EMG FR-H1, "Response to Loss of Secondary Heat Sink". C. Stay in E-0, "Reactor Trip or Safety Injection" until automatic actuation signals have been verified. D. Stay in E-0, "Reactor Trip or Safety Injection" until directed to transition or CSFST monitoring is directed.
Answer	D
Allowed references	None
LP and objective	LO 17 323 12, Rev 002, Obj. 17
WCGS procedure - print references	AP 15C-003
NRC KA Topic	2.4.21 - Knowledge of the parameters and logic used to assess the status of safety functions including: 1. Reactivity control 2. Core cooling and heat removal 3. Reactor coolant system integrity 4. Containment conditions 5. Radioactivity release control.
NRC KA topic importance factors	3.7 / 4.3
NRC 1122 KA - 10CFR55 41/43 tie	43.5/45.12
NRC difficulty rating	Not available
WCGS difficulty rating and explanation	A-3 - Higher order question. The student must recognize where the crew is in the accident response. Turbine trip verification is an immediate action step. Based on this, the candidate must select the proper rules of usage for the status trees.
Distracter explanation and references	A. Incorrect - E-0 must be completed to step requiring CSFST monitoring or transition is directed. This is a plausible distracter due to the urgency of a loss of heat sink. B. Incorrect - E-0 must be completed to step requiring CSFST monitoring or transition is directed. This is a plausible distracter due to the urgency of a loss of heat sink. C. Incorrect - Automatic actuations are completed at step 6 , transitioning to FR-H1 before directed at step 14 would violate rules of usage. This is a plausible distracter due to the urgency of a loss of heat sink. D. Correct - Step 14 RNO will require transition if verification of safeguards equipment does not correct red path condition, AP 15C-003 directs monitoring of CSFSTs when transition from E-0 is made or monitoring is directed in E-0.
NRC ES-401 Tier and section location	SRO: Tier - 3
Question original source	Wolf Creek Feb.1998 NRC Exam
Additional comments	

Question 099

A reactor trip and safety injection has occurred. The operators are performing EMG E-0.

The Supervising Operator is verifying turbine trip when the STA reports a red path on Heat Sink.

The crew will:

A. Transition to EMG FR-H1, "Response to Loss of Secondary Heat Sink" when E-0 immediate action verification is complete.

B. Immediately transition to EMG FR-H1, "Response to Loss of Secondary Heat Sink".

C. Stay in E-0, "Reactor Trip or Safety Injection" until automatic actuation signals have been verified.

D. Stay in E-0, "Reactor Trip or Safety Injection" until directed to transition or CSFST monitoring is directed.

Question Number	100
Question	Initial conditions: • A general emergency has been declared. • Projected dose: TEDE - 3 REM; Thyroid - 4 REM. • NPIS wind direction: From 230° to 50°, Stability class A. As the shift supervisor, the protective action recommendation (PAR) that should be made is evacuate: A. JRR, CCL, CTR, S-1, SW-1, W-1, S-2, SW-2, W-2. B. JRR, CCL, CTR, N-1, NE-1, E-1, NE-2, NE-3, E-2. C. JRR, CCL, SW-1, W-1, NW-1, W-2. D. JRR, CTR, NE-1, E-1, NE-3, E-2, 3E-2.
Answer	B. JRR, CCL, CTR, N-1, NE-1, E-1, NE-2, NE-3, E-2
Allowed references	EPP 06-006 Rev.0, Attachments A and B
LP and objective	LR 1007001, Obj. 2
WCGS procedure - print references	EPP 06-006, Rev.0; Steps 7.1.1 & 7.1.2, Attachments A & B
NRC KA Topic	2.4.29 Knowledge of the emergency plan.
NRC KA topic importance factors	4.0
NRC 1122 KA - 10CFR55 41/43 tie	43.5/45.11
NRC difficulty rating	Not Available
WCGS difficulty rating and explanation	A2 - Higher order question. The candidate must evaluate the given data and determine the protective action recommendations for the state and count.
Distracter explanation and references	A. Incorrect - Answer for a wind direction from 50° to 230°. B. Correct C. Incorrect - Answer for Site Area Emergency, wind direction from 90° to 270°, and does not include CTR zone. D. Incorrect - Answer for a wind direction from 256° to 76° and does not include CCL zone.
NRC ES-401 Tier and section location	SRO: Tier 3
Question original source	New
Additional comments	NRC Comment - Does not discriminate for the SRO. Answer - Replaced the question with one that discriminates.

Question: 100

Initial conditions:

- A general emergency has been declared.
- Projected dose: TEDE - 3 REM; Thyroid - 4 REM.
- NPIS wind direction: From 230° to 50°, Stability class A.

As the shift supervisor, the protective action recommendation (PAR) that should be made is evacuate:

A. JRR, CCL, CTR, S-1, SW-1, W-1, S-2, SW-2, W-2.

B. JRR, CCL, CTR, N-1, NE-1, E-1, NE-2, NE-3, E-2.

C. JRR, CCL, SW-1, W-1, NW-1, W-2.

D. JRR, CTR, NE-1, E-1, NE-3, E-2, 3E-2.

Question Number	101
Question	Power has been lost to the 120 VAC Instrument Bus NN01 and the following conditions exist: • As expected, Charging pump suction has swapped to the RWST. • All failed instruments have been selected out. • The operators have just established Excess Letdown per OFN NN-021. Which one of the following describes why Normal Letdown is not used at this point? A. Charging flow will have been minimized down to RCP seal injection only. B. A locked in Letdown Isolation signal exists. C. Power to the solenoid for Letdown Isolation valve BG HIS-459 has been lost closing the valve. D. All charging is lost and would cause flashing in the Normal Letdown line.
Answer	A. Charging flow will have been minimized down to RCP seal injection only.
Allowed references	None
LP and objective	LO1732431
WCGS procedure - print references	OFN NN-021 "Loss of Vital 120VAC Instrument Bus": E-13BG10 "Electrical For BG HIS-459"
NRC KA Topic	057 2.4.11 Knowledge of abnormal condition procedures.
NRC KA topic importance factors	3.4
NRC 1122 KA - 10CFR55 41/43 tie	41.10/43.5/45.13
NRC difficulty rating	Not Available
WCGS difficulty rating and explanation	A3 - Higher order question. The operator must recognize that with the VCT isolated (charging swapped to the VCT) that Normal Letdown would overfill the VCT and that the procedure has you minimize charging to the seals only.
Distracter explanation and references	A. Correct B. Incorrect: Initial conditions state that all failed instruments have been selected out and therefore the initiating signal for isolation will be clear. Credible in that initially there was a Letdown isolation signal. C. Incorrect: Power to the solenoid is DC power vice AC and therefore was not lost. Credible in that the instrument power for 459 was lost and may be confused with the DC solenoid power. D. Incorrect: Charging is not lost. Credible in that with charging lost the Normal Letdown Line would indeed flash.
NRC ES-401 Tier and section location	RO: Tier 1 Group 1
Question original source	Modified Bank
Additional comments	

Question 101

Power has been lost to the 120 VAC Instrument Bus NN01 and the following conditions exist:

- As expected, Charging pump suction has swapped to the RWST.
- All failed instruments have been selected out.
- The operators have just established Excess Letdown per OFN NN-021.

Which one of the following describes why Normal Letdown is not used at this point?

A. Charging flow will have been minimized down to RCP seal injection only.

B. A locked in Letdown Isolation signal exists.

C. Power to the solenoid for Letdown Isolation valve BG HIS-459 has been lost closing the valve.

D. All charging is lost and would cause flashing in the Normal Letdown line.

Question Number	102
Question	A unit startup is in progress with the reactor critical at 2200 cps in the source range when N-31 Source Range Detector High Voltage is lost. Choose the correct response. A. Raise power to the P-6 setpoint and continue the startup. B. Verify overlap of 1 decade with the Intermediate Range and continue startup. C. Place the unit in Hot Standby with the Reactor Trip Breakers open. D. Suspend positive reactivity additions and restore N-31 to operable status.
Answer	D. Suspend positive reactivity additions and restore N-31 to operable status.
Allowed references	None
LP and objective	SY1301501
WCGS procedure - print references	A. Technical Specifications, Gen 00-003 "Hot Standby to Minimum Load."
NRC KA Topic	032 AK3.01 Knowledge of the reasons for the following responses as they apply to the Loss of Source Range Nuclear Instrumentation: Startup termination on source-range loss
NRC KA topic importance factors	3.2
NRC 1122 KA - 10CFR55 41/43 tie	41.5,41.10/45.6/45.13
NRC difficulty rating	Not Available
WCGS difficulty rating and explanation	K3 This is a knowledge item requiring recall of the Technical specifications concerning the Source Range. The Operator must discern between the initial conditions to determine which Action is required.
Distracter explanation and references	A. Incorrect: No positive reactivity manipulations are allowed. Credible in that above P-6 SR is not required. B. Incorrect: No positive reactivity manipulations are allowed. Credible in that you have verified your overlap and are fairly confident of your power level using the one remaining channel. C. Incorrect: Shutdown not required. Credible in that if both Source Ranges are inoperable you are required to open the trip breakers per Gen 00-003 "Hot Standby to Minimum Load." D. Correct.
NRC ES-401 Tier and section location	RO: Tier 1 Group 2
Question original source	Bank
Additional comments	

Question 102

A unit startup is in progress with the reactor critical at 2200 cps in the source range when N-31 Source Range Detector High Voltage is lost.

Choose the correct response.

A. Raise power to the P-6 setpoint and continue the startup.

B. Verify overlap of 1 decade with the Intermediate Range and continue startup.

C. Place the unit in Hot Standby with the Reactor Trip Breakers open.

D. Suspend positive reactivity additions and restore N-31 to operable status.

Question Number	103
Question	Reactor power is being maintained at approximately 6% prior to placing the main turbine on-line. Intermediate Range (IR) channel N-35 is in the TRIP BYPASS position, with all required bistables tripped for troubleshooting This failure occurred just after entering Mode 1. Which one of the following will occur if the N-35 Control Power fuses were to blow at this time? A. An overhead annunciator for IR detector high voltage will occur. B. The reactor will immediately trip on IR high. C. An overhead annunciator for IR detector compensating voltage will occur. D. Both Source Range instruments will immediately re-energize.
Answer	B. The reactor will immediately trip on IR high.
Allowed references	None
LP and objective	SY1301501 Obj. 10
WCGS procedure - print references	M744-0020 Reactor Protection Logic
NRC KA Topic	033 AA1.02 Ability to operate and/or monitor the following as they apply to the Loss of Intermediate Range Nuclear Instrumentation: Level trip bypass.
NRC KA topic importance factors	3.0
NRC 1122 KA - 10CFR55 41/43 tie	41.7/45.5/45.6
NRC difficulty rating	Not Available
WCGS difficulty rating and explanation	A4 - Higher order question. The operator has to know (1) that the Intermediate Range Trips are not blocked at this point in the Startup, (2) what the trip coincidence is for IR, (3) and how the trip bypass feature works in relation to the trip relays (4) understand which bistables are required to be tripped and that the IR Trip bistables are bypassed due to ½ coincidence (4) and then know how control power feeds the circuit to keep them powered in bypass.
Distracter explanation and references	A. Incorrect: Instrument power is still available. This is not fed from control power. Credible in that if instrument power were lost this would be true. B. Correct C. Incorrect: Instrument power is still available. This is not fed from control power. Credible in that if instrument power were lost this would be true. D. Incorrect: P-6 would need to be lost which would require both channels of IR to be lost and not just the control power on 1 channel. Credible in that one needs to remember the coincidence of P-6 and the permissives effect on the SR HV circuit to determine that this is incorrect.
NRC ES-401 Tier and section location	RO: Tier 1 Group 2
Question original source	Bank
Additional comments	

Question 103

Reactor power is being maintained at approximately 6% prior to placing the main turbine on-line.

Intermediate Range (IR) channel N-35 is in the TRIP BYPASS position, with all required bistables tripped for troubleshooting This failure occurred just after entering Mode 1.

Which one of the following will occur if the N-35 Control Power fuses were to blow at this time?

A. An overhead annunciator for IR detector high voltage will occur.

B. The reactor will immediately trip on IR high.

C. An overhead annunciator for IR detector compensating voltage will occur.

D. Both Source Range instruments will immediately re-energize.

Question Number	104
Question	A plant startup is in progress. Power is at 10-6 amps on both IR channels. Which one of the following will occur if IR channel N36 fails to current equivalent to 21% power? A. IR high flux reactor trip B. Manual and automatic rod stop C. PZR low pressure reactor trip is unblocked D. PR low flux reactor trip
Answer	B. Manual and automatic rod stop
Allowed references	None
LP and objective	SY1300100 Rod Control System Obj. 10
WCGS procedure - print references	M-744-20,21 Reactor Protection Logics
NRC KA Topic	001 K4.07 Knowledge of CRDS design feature(s) and/or interlock(s) which provide for the following: Rod stops
NRC KA topic importance factors	3.7
NRC 1122 KA - 10CFR55 41/43 tie	41.7
NRC difficulty rating	Not Available
WCGS difficulty rating and explanation	K2 The operator must know the setpoint and coincidence of the Intermediate Range Rod Stop and that it is not blocked at this power level..
Distracter explanation and references	A. Incorrect - IR channel Hi Flux Rx trip is at current equivalent to 25% power on 1/2 channels. Credible in that it is very close to the setpoint and meets coincidence. B. Correct - Manual and automatic rod withdrawal is blocked when 1/2 channels go above current equivalent to 20% power and the IR Hi Flux Rx trip is not blocked. C. Incorrect - IR channels are not interlocked with this function. P-7 unblocks at 10% turbine or reactor power to place this trip in service. Credible in that IR feeds into the P-6 permissive circuit. D. Incorrect - PR channels generate this trip. It is not applicable to IR channels. Credible in that both are low power trips and or blocks.
NRC ES-401 Tier and section location	RO: Tier 2 Group 1
Question original source	Bank
Additional comments	

Question 104

A plant startup is in progress. Power is at 10-6 amps on both IR channels.

Which one of the following will occur if IR channel N36 fails to current equivalent to 21% power?

A. IR high flux reactor trip
B. Manual and automatic rod stop
C. PZR low pressure reactor trip is unblocked
D. PR low flux reactor trip

Question Number	105
Question	A Low Reactor Coolant Pump Standpipe level alarm is an indication of which one of the following problems? A. Low seal injection flow. B. Failure of #1 seal. C. Failure of #2 seal. D. Failure of #3 seal.
Answer	D. Failure of #3 seal.
Allowed references	None
LP and objective	SY1300300 Obj. 4
WCGS procedure - print references	ALR 00-072E RCP C Standpipe LEV LO
NRC KA Topic	003 2.1.28 Knowledge of the purpose and function of major system components and controls.
NRC KA topic importance factors	3.2
NRC 1122 KA - 10CFR55 41/43 tie	41.7
NRC difficulty rating	Not Available
WCGS difficulty rating and explanation	K2 The operator must know that the standpipe is the mechanism for maintaining seal injection for #3 seal. If it is low the DP across the seal must be lower causing excessive flow due to a #3 seal failure.
Distracter explanation and references	A. Incorrect: Seal Injection flow feeds #1 seal. Credible in that it is a source of seal injection to one of the seals B. Incorrect: #1 Seal failure will cause higher flow through the subsequent seals and would not cause a low standpipe level. Credible in that it is the most common failure mode of RCP seals. C. Incorrect: The failure of the #2 seal would cause greater flow up toward the #3 seal and cause either a High standpipe level or seat the check valve. Credible in that # 2 seal failure would affect #3 seal. D. Correct.
NRC ES-401 Tier and section location	RO: Tier 2 Group 1
Question original source	Wolf Creek Aug 97
Additional comments	

Question 105

A Low Reactor Coolant Pump Standpipe level alarm is an indication of which one of the following problems?

A. Low seal injection flow.

B. Failure of #1 seal.

C. Failure of #2 seal.

D. Failure of #3 seal.

Question Number	106
Question	Wolf Creek is operating at full power with all control systems in automatic. If the controlling PZR level channel detector were to develop a leak on the reference leg, which ONE of the below describes how the CVCS system would respond? "Indicated PZR level for the failed channel would _____, VCT level would _____, and actual PZR level would _____". A. Increase, decrease, decrease B. Increase, increase, decrease C. Decrease, increase, decrease D. Decrease, decrease, increase
Answer	B. Increase, increase, decrease
Allowed references	None
LP and objective	SY1301000 Pressurizer Pressure and Level Control
WCGS procedure - print references	M-744-028 Reactor Protection Logics
NRC KA Topic	004 A1.06 Ability to predict and/or monitor changes in parameters(to prevent exceeding design limits) associated with operating the CVCS controls including: VCT Level
NRC KA topic importance factors	3.0
NRC 1122 KA - 10CFR55 41/43 tie	41.5/45.5
NRC difficulty rating	Not Available
WCGS difficulty rating and explanation	A3 The operator must understand what a reference leg leak will do to the PZR Level controlling channel signal. He then must analyze what the control circuit will do to compensate for the changing signal. He then must analyze what the changing flow rates will do to the actual VCT and PZR Levels.
Distracter explanation and references	A. Incorrect: VCT Level will increase due to decreased charging. Credible in that 2 out of the 3 choices are correct. B. Correct C. Incorrect: Indicated PZR level will increase. Credible in that 2 out of the 3 choices are correct. D. Incorrect: Indicated PZR Level will increase. Credible in that if indicated PZR level decreased, actual VCT level would decrease and actual PZR level would increase..
NRC ES-401 Tier and section location	RO: Tier 2 Group 1
Question original source	Bank
Additional comments	

Question 106

Wolf Creek is operating at full power with all control systems in automatic. If the controlling PZR level channel detector were to develop a leak on the reference leg, which ONE of the below describes how the CVCS system would respond?

"Indicated PZR level for the failed channel would _____, VCT level would _____, and actual PZR level would _____".

A. Increase, decrease, decrease

B. Increase, increase, decrease

C. Decrease, increase, decrease

D. Decrease, decrease, increase

Question Number	107
Question	An automatic Safety Injection Signal (SIS) actuation has occurred and the operators have just reset the SIS. Which of the following could be used to prevent another automatic SIS actuation? A. Placing affected pump controls in Pull-To-Lock, until the auto-actuate signal is no longer present. B. Cycling the reactor trip breakers to clear the P-4 interlock. C. The P-4 interlock, actuated by the opening of the reactor trip breakers. D. The original SIS actuation maintaining a block signal on follow-up ESF signals.
Answer	C. The P-4 interlock, actuated by the opening of the reactor trip breakers.
Allowed references	None
LP and objective	SY1301301 Engineered Safety Features Actuation System
WCGS procedure - print references	M-744 0025
NRC KA Topic	013 A4.03 Ability to manually operate and/or monitor in the control room: ESFAS initiation.
NRC KA topic importance factors	4.5
NRC 1122 KA - 10CFR55 41/43 tie	41.7/45.5 to 45.8
NRC difficulty rating	Not Available
WCGS difficulty rating and explanation	K2 The operator must understand and recall that in the SI reset logic the P-4 signal must be cleared by closing the reactor trip breakers before another automatic SI can be initiated.
Distracter explanation and references	A. Incorrect: This will not block the SI signal only stop whatever components have a pull to lock feature. Credible in that this technique is used to ensure equipment will not start under various circumstances. B. Incorrect: This actually will enable SI by clearing the block resulting from the manual SI reset. Credible in that it is a control in the SI circuit requiring detailed knowledge of its operation. C. Correct D. Incorrect: The original signal would help to maintain the SI actuation. Credible in that the circuit is designed to prevent pumping by locking in the signal but the original signal is not used for this purpose.
NRC ES-401 Tier and section location	RO: Tier 2 Group 1
Question original source	Modified Bank
Additional	NRC comment - "A" and "B" appear to be arguably correct.

comments	Answer - Changed distracter "B".

Question: 107

An automatic Safety Injection Signal (SIS) actuation has occurred and the operators have just reset the SIS.

Which of the following could be used to prevent another automatic SIS actuation?

A. Placing affected pump controls in Pull-To-Lock, until the auto-actuate signal is no longer present.

B. Cycling the reactor trip breakers to clear the P-4 interlock.

C. The P-4 interlock, actuated by the opening of the reactor trip breakers.

D. The original SIS actuation maintaining a block signal on follow-up ESF signals.

Question Number	108
Question	The following plant conditions exist: • The unit has been tripped for 20 minutes • IR channel N35 has decreased and stabilized at 1.0E-11 amps. • IR channel N36 has decreased and stabilized at 9.9E-9 amps. Which ONE of the following describes the probable cause and action to be taken for these conditions? A. IR channel N35 is over compensated; continue with the shutdown. B. IR channel N35 is under compensated; unblock the Source Range nuclear instruments. C. IR channel N36 is under compensated; unblock the Source Range nuclear instruments. D. IR channel N36 is over compensated; continue with the shutdown.
Answer	C. IR channel N36 is under compensated; unblock the Source Range nuclear instruments.
Allowed references	None
LP and objective	SY1301501 Obj. 10
WCGS procedure - print references	M-744-0020
NRC KA Topic	015 K6.02 Knowledge of the effect of a loss or malfunction on the following will have on the NIS. Discriminator/compensation circuits.
NRC KA topic importance factors	2.6
NRC 1122 KA - 10CFR55 41/43 tie	41.7/45.7
NRC difficulty rating	Not Available
WCGS difficulty rating and explanation	A3 - Higher order question. The operator must know that SR instruments should energize around 12-15 minutes after the trip. They can determine this from the known -1/3 DPM SUR after the trip and the number of decades it takes to reach P-6 at 10-10 amps from current power level at the trip. They will have determined in the previous steps what the expected IR readings should be. From this they have to determine the erroneous reading then analyze the affect of under or over compensation on the IR readings to determine which of these has caused the observed reading. They must then know that they will not meet the coincidence for P-6 and that this is required for automatic energization of Source Range and that unblocking is required.
Distracter explanation and references	A. Incorrect: N35 reading is normal. Credible in that if you do not understand that at this time after Shutdown the IR level should be reading at the bottom of the scale then the instrument could be overcompensated and reading lower than normal. B. Incorrect. N35 reading is normal. Credible in that either N35 or N36 is reading abnormally and the operator does not understand compensation circuits this is a likely answer. C. Correct D. Incorrect. N36 is undercompensated. And SR must be used for the shutdown and therefore must be energized first. Credible if there is a lack

	of understanding in the compensation circuits and the P-6 interlocks.
NRC ES-401 Tier and section location	RO: Tier 2 Group 1
Question original source	Bank
Additional comments	

Question 108

The following plant conditions exist:

- The unit has been tripped for 20 minutes
- IR channel N35 has decreased and stabilized at 1.0E-11 amps.
- IR channel N36 has decreased and stabilized at 9.9E-9 amps.

Which ONE of the following describes the probable cause and action to be taken for these conditions?

A. IR channel N35 is over compensated; continue with the shutdown.

B. IR channel N35 is under compensated; unblock the Source Range nuclear instruments.

C. IR channel N36 is under compensated; unblock the Source Range nuclear instruments.

D. IR channel N36 is over compensated; continue with the shutdown.

Question Number	109
Question	Plant startup is in progress with main turbine roll commencing and reactor power at 6%. Power range N-44 is out of service due to a failed detector. Which one of the below is UNBLOCKED under these conditions? A. Intermediate Range High Flux Reactor Trip B. Pressurizer Low Pressure Reactor Trip C. Reactor Trip from Turbine Trip D. Pressurizer High Level Reactor Trip.
Answer	A. Intermediate Range High Flux Reactor Trip
Allowed references	None
LP and objective	SY1301501 Obj. 5
WCGS procedure - print references	M744-0020
NRC KA Topic	015 2.4.2 Knowledge of system setpoints, interlocks and automatic actions associated with EOP entry conditions.
NRC KA topic importance factors	3.9
NRC 1122 KA - 10CFR55 41/43 tie	41.7/45.7/45.8
NRC difficulty rating	Not Available
WCGS difficulty rating and explanation	K3 The operator must know that P-7 is fed from P-10 with a setpoint of 10% reactor power. In addition, he must know the coincidence of P-10 and the effects of the out of service power range on that coincidence. He then must know that P-10(P-7) is used to block some circuits above 10% and some circuits below 10% reactor power and which ones they are.
Distracter explanation and references	A. Correct B. Incorrect. Blocked below 10% by P-7. Credible in that P-7 feeds the block circuit for this trip. C. Incorrect: Blocked by P-9 below 50%. Credible in that this trip has a block affected by the power range instruments. D. Incorrect: Blocked below 10% by P-7. Credible in that P-7 feeds the block circuit for this trip.
NRC ES-401 Tier and section location	RO: Tier 2 Group 1
Question original source	Bank
Additional comments	

Question 109

Plant startup is in progress with main turbine roll commencing and reactor power at 6%. Power range N-44 is out of service due to a failed detector.

Which one of the below is UNBLOCKED under these conditions?

A. Intermediate Range High Flux Reactor Trip

B. Pressurizer Low Pressure Reactor Trip

C. Reactor Trip from Turbine Trip

D. Pressurizer High Level Reactor Trip.

Question Number	110
Question	Wolf Creek is at 100% Reactor Power with the following Containment Cooling System Fans in service: • H_2 Mixing Fans: All fans running in fast speed. • Control Rod Drive Mechanism (CRDM) Fans: "B", "C", &"D" running. Which one of the below lists the final state of the following two (2) Containment Cooling System subsystems to a Safety Injection Signal? H_2 Mixing Fans — CRDM Fans A. Four (4) running in fast — 3 running B. Four (4) running in slow — 3 running C. Four (4) running in fast — 1 running D. Four (4) running in slow — 1 running
Answer	D. Four (4) running in slow 1 running
Allowed references	None
LP and objective	SY1302600
WCGS procedure - print references	E-11005 List of Loads Supplied by Emergency Diesel Generator.
NRC KA Topic	022 K2.01 Knowledge of the power supplies to the following: Containment Cooling fans.
NRC KA topic importance factors	3.0*
NRC 1122 KA - 10CFR55 41/43 tie	41.7
NRC difficulty rating	Not Available
WCGS difficulty rating and explanation	K3 The Operator must know the effect of the LOCA sequencer on the Containment Cooling System Fans (i.e. what speeds they start in and are they load shed). He must also know which CRDM fans are on Vital and which are on non-vital busses.
Distracter explanation and references	A. Incorrect: The Hydrogen mixing fans are started in slow speed. And "B" and "D" CRDM fans are load shed. Credible in that four Hydrogen fans are running and 3 CRDM fans would be running if they were not load shed. B. Incorrect - "B" and "D" CRDM fans are load shed. Credible in that the Hydrogen Mixing fans are started in slow and 3 CRDM fans would be running if they were not load shed. C. Incorrect - The Hydrogen mixing fans are started in slow speed. Credible in "B" and "D" CRDM fans are load shed to reduce the number running to one. D. Correct: All Four Hydrogen mixing fans are started in slow speed and "B" and "D" CRDM fans are load shed leaving only "C" CRDM fan

	running.
NRC ES-401 Tier and section location	RO: Tier 2 Group 1
Question original source	New
Additional comments	NRC comment - Tests the same knowledge as question 24. Answer - Replaced the question.

Question: 110

Wolf Creek is at 100% Reactor Power with the following Containment Cooling System Fans in service:

- H_2 Mixing Fans: All fans running in fast speed.
- Control Rod Drive Mechanism (CRDM) Fans: "B", "C", &"D" running.

Which one of the below lists the final state of the following two (2) Containment Cooling System subsystems to a Safety Injection Signal?

	H_2 Mixing Fans	CRDM Fans
A.	Four (4) running in fast	3 running
B.	Four (4) running in slow	3 running
C.	Four (4) running in fast	1 running
D.	Four (4) running in slow	1 running

Question Number	111
Question	The plant has been operating at 40% power for the past two days when a feed line shears off one steam generator. Level in the affected steam generator rapidly blows down to zero. Levels in the other three S/Gs shrink to a minimum of 25% NR. Which one of the following describes the response of AMSAC to this event? A. AMSAC will not respond to this event. B. Immediately trips the turbine and initiates auxiliary feed to the steam generators. C. Immediately trips the turbine and initiates auxiliary feed, after a 25 second delay, to the steam generators. D. After a 25 second delay it trips the turbine and initiates auxiliary feedwater to the steam generators.
Answer	A
Allowed references	None
LP and objective	SY1406500, Rev. 000, Obj. 3
LP reference pages	9, 10, & 11
WCGS procedure - print references	N/A
NRC KA Topic	059 K3.03
NRC KA topic importance factors	3.5 Knowledge of the effect that a loss or malfunction of the MFW will have on the following: S/Gs.
NRC 1122 KA - 10CFR55 41/43 tie	41.7/45.6
NRC difficulty rating	N/A
WCGS difficulty rating and explanation	A3 - Higher order question. The candidate must know the AMSAC logic and recall that it is armed at 2/2 impulse chambers > 35%. Then it must be recalled that the logic for actuation is 3/4 S/Gs < 5% level
Distracter explanation and references	A. Correct - AMSAC will actuate if 2/2 turbine impulse chambers are above 35% and 3/4 S/Gs are less than 5%. AMSAC will, after a 25 second time delay, generate a turbine trip and an auxiliary feedwater actuation signal. In this case only one S/G goes below setpoint so an actuation does not occur. B. Incorrect - This is a plausible distracter because it lists the functions performed by AMSAC actuation. C. Incorrect - This is a plausible distracter because it is similar to the normal AMSAC actuation sequence. D. Incorrect - This is a plausible distracter because it is the normal AMSAC actuation sequence.
	RO Tier 2 Group 1
Question original source	Exam Bank
Additional comments	

Question: 111

The plant has been operating at 40% power for the past two days when a feed line shears off one steam generator. Level in the affected steam generator rapidly blows down to zero. Levels in the other three S/Gs shrink to a minimum of 25% NR.

Which one of the following describes the response of AMSAC to this event?

A. AMSAC will not respond to this event.

B. Immediately trips the turbine and initiates auxiliary feed to the steam generators.

C. Immediately trips the turbine and initiates auxiliary feed, after a 25 second delay, to the steam generators.

D. After a 25 second delay it trips the turbine and initiates auxiliary feedwater to the steam generators.

Question Number	112
Question	A plant fire has caused the loss of all Train "A" 4160V AC and forced the evacuation of the Control Room. The plant is stable and is being controlled from the ASP. On a low Condensate Storage Tank level the suction to the MDAFW pumps will: A. Automatically transfer both train suctions to ESW. B. Automatically transfer only "A " train MDAFW pump suction. C. Automatically transfer only "B " train MDAFW pump suction. D. Neither train MDAFW suction valves will transfer to ESW.
Answer	D
Allowed references	None
LP and objective	SY 14 061 00, Rev. 008, Obj. 1
WCGS procedure - print references	E-13AL02A, 02B, 04A, & 04B, E-13RP12
NRC KA Topic	2.1.28 Knowledge of the purpose and function of major system components and controls.
NRC KA topic importance factors	3.2/3.3
NRC 1122 KA - 10CFR55 41/43 tie	41.7
NRC difficulty rating	Not Available
WCGS difficulty rating and explanation	A-3 - Higher order in that it requires recognizing that 'A' train valves are prevented from shifting due to the loss of power to the 'A' train vital 4160V AC and that taking isolate switches to ISOLATE disables the switchover for the 'B' train valves. It also requires determining that a AFAS-T(generated by loss of NB01) with a low level in the CST can generate a LSP swapover. Level difficulty 3 due to recall of multiple individual fact before analysis can begin.
Distracter explanation and references	A. Incorrect - "A" train ESW valves fail as is on loss of power, "B" train ESW valves are disabled by actuating the isolate switches at the ASP in accordance with OFN RP-017. Plausible distracter because this is normal system operation with power available. B. Incorrect - "A" train ESW valves fail as is on loss of power to Train A 4160V busses. due to loss of NG buses. Plausible distracter because A train transfer is not affected by the ASP isolate switches. C. Incorrect - "B" train ESW valves are disabled by actuating the isolate switches at the ASP in accordance with OFN RP-017. Plausible distracter because these valves would transfer if the ASP isolate switches were not activated. The candidate could choose this if unfamiliar with OFN RP-017. D. Correct - A train valves fail as is on loss of power, B train valves are disabled by isolate switches at the ASP in accordance with OFN RP-017.
NRC ES-401 Tier and section location	RO: Tier - 2 Group - 1 SRO: Tier 2 Group 1
Question original source	Wolf Creek Feb. 98 NRC Exam
Additional comments	

Question 112

A plant fire has caused the loss of all Train "A" 4160V AC and forced the evacuation of the Control Room. The plant is being controlled from the ASP.

On a low Condensate Storage Tank level the suction to the MDAFW pumps will:

A. Automatically transfer both train suctions to ESW.

B. Automatically transfer only "A " train MDAFW pump suction.

C. Automatically transfer only "B " train MDAFW pump suction.

D. Neither train MDAFW suction valves will transfer to ESW.

Question Number	113
Question	Wolf Creek has experienced a Loss of Coolant Accident. The Operators have just completed Step 4 of EMG E1 " Loss of Reactor or Secondary Coolant" which resets the SI signal. All systems have operated NORMALLY. Offsite Power is lost and again all systems respond NORMALLY. RCS pressure stabilizes at 550 psig . Select from the following the total ECCS pump flow into the RCS. A. 1100 gpm B. 1620 gpm C. 1980 gpm D. 2420 gpm
Answer	A. 1100 gpm
Allowed references	None
LP and objective	SY1300600 Obj 4 & 5
WCGS procedure - print references	E-12NF01 Load Shedding and Emergency Load Sequencing Logic
NRC KA Topic	006 K5.06 Knowledge of the operational implications of the following concepts as they apply to ECCS: relationship between ECCS flow and RCS pressure.
NRC KA topic importance factors	3.5
NRC 1122 KA - 10CFR55 41/43 tie	41.5/45.7
NRC difficulty rating	N/A
WCGS difficulty rating and explanation	A4 The operator must analyze the following plant conditions, loss of offsite power, the normal response of the Diesels repowering the busses, and the operators resetting SI. He must then come up with the correct plant response and combination of pumps that will be running. Then he must take existing plant pressure and recall the pump operating characteristics for the Centrifugal Charging Pumps to come to the correct answer..
Distracter explanation and references	A. Correct - Two CCPs at runout (550gpm) B. Incorrect - Two CCPs at design (150gpm) and 2 SI pump (660 gpm) at runout. Credible in that this is a valid flow for existing pressure and the stated pump configuration. C. Incorrect - Two CCPs at runout (550gpm) 2 SI pumps at Design flow (440 gpm). Credible in that this is a valid flow for existing pressure and the stated pump configuration. D. Incorrect: Two CCPs at runout (550gpm) and 2 SI pumps at runout (660 gpm). Credible in that this is a valid flow for existing pressure and the stated pump
	RO Tier 2 Group 2
Question original source	NEW
Additional comments	

Question 113:

Wolf Creek has experienced a Loss of Coolant Accident. The Operators have just completed Step 4 of EMG E1 " Loss of Reactor or Secondary Coolant" which resets the SI signal. All systems have operated NORMALLY

Offsite Power is lost and again all systems respond NORMALLY. RCS pressure stabilizes at 550 psig .

Select from the following the total ECCS pump flow into the RCS.

A. 1100 gpm

B. 1620 gpm

C. 1980 gpm

D. 2420 gpm

Question Number	114
Question	While operating at 100% power, the controlling channel of pressurizer pressure fails high. Which of the following responses will automatically occur as a result of this failure? A. Pzr PORV BB PCV-456A will open, and remain open B. Pzr PORV BB PCV-456A will open, then close as actual pressure drops C. Pzr PORV BB PCV-455A will open and remain open D. Pzr PORV BB PCV-455A will open , then close as actual pressure drops
Answer	D. Pzr PORV BB PCV-455A will open, then close as actual pressure drops
Allowed references	None
LP and objective	SY130100 Obj. 4
WCGS procedure - print references	M-744-0028 Reactor Protection Logics
NRC KA Topic	010 K4.03 Knowledge of PZR PCS design feature(s) and/or interlocks(s) which provide for the following: Overpressure control.
NRC KA topic importance factors	3.8
NRC 1122 KA - 10CFR55 41/43 tie	41.7
NRC difficulty rating	Not Available
WCGS difficulty rating and explanation	A3 - Higher order question. The operator must know that the controlling channel affects only PORV BB PCV-455A. He must also know that the actual pressure feeds into the block circuit and that the remaining channels have enough coincidence to override the failed channel.
Distracter explanation and references	A. Incorrect: BB PCV-456A is not affected by the controlling pressure channel. Credible in that BB PCV-455A is affected and the operator must discern the difference. B. Incorrect: BB PCV-456A is not affected by the controlling pressure channel. Credible in that BB PCV-455A is affected and the operator must discern the difference. C. Incorrect: BB PCV-455A opens but will be closed by the actual pressure decrease rather than remain open. Credible in that the candidate must realize that actual pressure regardless of the failed channel will close the valve. D. Correct
NRC ES-401 Tier and section location	RO: Tier 2 Group 2
Question original source	Modified Bank
Additional comments	

Question 114

While operating at 100% power, the controlling channel of pressurizer pressure fails high.

Which of the following responses will automatically occur as a result of this failure?

A. Pzr PORV BB PCV-456A will open, and remain open
B. Pzr PORV BB PCV-456A will open, then close as actual pressure drops
C. Pzr PORV BB PCV-455A will open and remain open
D. Pzr PORV BB PCV-455A will open , then close as actual pressure drops

Question Number	115
Question	The Unit is recovering from an inadvertent Safety Injection Signal actuation when a loss of bus NB01 normal and alternate feeder breakers occurs. • All systems have responded normally. • The Containment Atmosphere Control fans are not running. With the given conditions, the Containment Atmosphere Control Fan, CGR01B, can be started: A. after the load shed signal is clear. B. once the Shutdown Sequencer times out. C. once the Safety Injection Signal is reset. D. at anytime with the handswitch.
Answer	D. at anytime with the handswitch.
Allowed references	None
LP and objective	SY1302800 Obj. 2 SY1406400 Obj. 12
WCGS procedure - print references	E-11005, E-03GR01
NRC KA Topic	027 K2.01 (Containment Iodine Removal) Knowledge of bus power supplies to the following: Fans
NRC KA topic importance factors	3.1*
NRC 1122 KA - 10CFR55 41/43 tie	41.7
NRC difficulty rating	Not Available
WCGS difficulty rating and explanation	A2 The Operator needs to remember that the power supply for the Atmosphere Control Unit is from PG19/20 which is a non-vital supply. He also needs to understand that both sequencers will have been activated but that these are not load shed from either sequencer.
Distracter explanation and references	A. Incorrect: This sequencer does not load shed these fans. Credible in that some non-vital loads are load shed and these units are in containment but not necessary for accident mitigation. B. Incorrect: This sequencer does not load shed these fans. Credible in that some non-vital loads are load shed and these units are in containment but not necessary for accident mitigation. C. Incorrect: An SIS does not load shed these fans. Credible in that some non-vital loads are load shed and these units are in containment but not necessary for accident mitigation. D. Correct - These fans are not supplied from the emergency buses.
NRC ES-401 Tier and section location	RO: Tier 2 Group 3
Question original source	New

Additional comments	NRC Comment - There are really only two choices. Answer - Changed the stem to reflect that the fan does not receive a load shed signal. Revised the distractors to reflect the stem changes.

Question: 115

The Unit is recovering from an inadvertent Safety Injection Signal actuation when a loss of bus NB01 normal and alternate feeder breakers occurs.

- All systems have responded normally.
- The Containment Atmosphere Control fans are not running.

With the given conditions, the Containment Atmosphere Control Fan, CGR01B, can be started:

A. after the load shed signal is clear.

B. once the Shutdown Sequencer times out.

C. once the Safety Injection Signal is reset.

D. at anytime with the handswitch.

Question Number	116
Question	The Unit is in Mode 1. There has been a small undiscovered leak, over a period of time, between the RCS and the Component Cooling System from one of the Reactor Coolant Pump Thermal Barriers. Which of the following would be a result of this condition? A. Automatic surge tank makeup valve opens. B. Radwaste components supply/return valves close. C. Containment CCW supply/return bypass valves close. D. Component Cooling Water surge tank vent valve closes.
Answer	D. Component Cooling Water surge tank vent valve closes.
Allowed references	None
LP and objective	SY1400800 Obj. 2
WCGS procedure - print references	N/A
NRC KA Topic	008 K4.02 Knowledge of CCWS design feature(s) and/or interlock(s) which provide for the following: Operation of the surge tank, including the associated valves and controls.
NRC KA topic importance factors	2.9
NRC 1122 KA - 10CFR55 41/43 tie	41.7
NRC difficulty rating	Not Available
WCGS difficulty rating and explanation	A2 The operator must recognize that in Mode 1 the pressure is higher in the RCS and that Leakage will be to the CCW system. This will result in a high activity level in the CCW system. The operator must then recognize that high activity will close the Surge tank vent valves.
Distracter explanation and references	A. Incorrect: The makeup valves will close on high activity or level. Credible in that this valve responds to both activity and level. B. Incorrect. This valve will not respond to activity levels. Credible in that on a leak in the Radwaste header(high flow) or low surge tank level this valve will isolate. The Operator must know that (1) the leak if undiscovered is well below the setpoint for isolation and (2)is on the wrong header. C. Incorrect: The bypass valves do not respond except in manual. Credible in that the Containment Supply and Return valves (not the bypass) do shut on high flow in the case of a Thermal Barrier Leak. D. Correct:
NRC ES-401 Tier and section location	RO: Tier 2 Group 3
Question original source	New
Additional comments	

Question 116

The Unit is in Mode 1. There has been a small undiscovered leak, over a period of time, between the RCS and the Component Cooling System from one of the Reactor Coolant Pump Thermal Barriers.

Which of the following would be a result of this condition?

A. Automatic surge tank makeup valve opens.

B. Radwaste components supply/return valves close.

C. Containment CCW supply/return bypass valves close.

D. Component Cooling Water surge tank vent valve closes.

Question Number	117
Question	The crew is performing GEN00-006, Hot Standby to Cold Shutdown. What is the earliest that RHR can be placed in service in accordance with GEN 00-006? A. Mode 3 B. Mode 3 < 375°F C. Mode 4 D. Mode 4 < 325°F
Answer	C. Mode 4
Allowed references	None
LP and objective	LO1732700 Technical Specifications SY1300500 RHR Lesson Plan
WCGS procedure - print references	Technical Specifications, GEN 006 Step 4.12
NRC KA Topic	2.1.22 Ability to determine Mode of Operation
NRC KA topic importance factors	2.8
NRC 1122 KA - 10CFR55 41/43 tie	43.5/45.13
NRC difficulty rating	Not Available
WCGS difficulty rating and explanation	K3 The Operator must remember the procedural limitations of temperature prior to placing RHR in service. He then must recognize which temperature equates to which Mode and select accordingly.
Distracter explanation and references	A. Incorrect: GEN 6 states <350°F for placing RHR in service. Credible in that this is a shutdown mode and there are actions which must be accomplished in this Mode prior to proceeding down such as disabling Safety Injection Pumps. B. Incorrect: GEN 6 states <350°F for placing RHR in service. Credible in that 375°F is the temperature at which the NCP must be inoperable and cold overpressure protection system must be armed. C. Correct D. Incorrect: The question states the earliest temperature and that would be at the transition to Mode 4 at 350°F and not at 325°F. Credible in that Tech Spec states that at 325°F all CCPs and SI pumps must be inoperable except the allowed operable pumps.
NRC ES-401 Tier and section location	RO: Tier 3
Question original source	NEW
Additional comments	NRC comment: Beyond expected RO knowledge Response: The RO is trained on the temperatures and pressures for placing RHR in service.

Question 117

The crew is performing GEN00-006, Hot Standby to Cold Shutdown.

What is the earliest that RHR can be placed in service in accordance with GEN 00-006?

A. Mode 3

B. Mode 3 < 375°F

C. Mode 4

D. Mode 4 < 325°F

Question Number	118
Question	Shortly after turnover, a Nuclear Station Operator informs you that he will be completing a system checklist turned over to him that was started on the previous shift. Which one of the following describes the action (s) required regarding usage of this procedure? A. A notation must be made on the procedure cover sheet at the point which the previous shift turned the system checklist over. B. The procedure must be replaced with a new working copy, transferring all signatures over to the new copy prior to use. C. The procedure must be verified to be the latest revision prior to use by the oncoming Nuclear Station Operator. D. No action is required provided the previous shift verified the procedure as being the latest revision.
Answer	D. No action is required provided the previous shift verified the procedure as being the latest revision.
Allowed references	None
LP and objective	LO1733203
WCGS procedure - print references	AP 21-001 Rev.13; AP 15C-002, Rev.10, Steps 6.4.1 & 6.4.2.
NRC KA Topic	2.1.29 Knowledge of how to conduct and verify valve lineups
NRC KA topic importance factors	3.4
NRC 1122 KA - 10CFR55 41/43 tie	41.10/45.1/45.12
NRC difficulty rating	Not Available
WCGS difficulty rating and explanation	K2 - Lower order question. The operator must remember the contents of the procedure cover sheet.
Distracter explanation and references	A. Incorrect - No notation on the cover sheet is required procedurally. B. Incorrect - Procedure replacement is not procedurally required. C. Incorrect - The procedure cover sheet shows the procedure was checked for the latest revision.. D. Correct - No action is procedurally required.
NRC ES-401 Tier and section location	RO: Tier 3
Question original source	Bank
Additional comments	NRC Comment - Does not discriminate - AO knowledge. Answer - Replaced the original question.

Question: 118

Shortly after turnover, a Nuclear Station Operator informs you that he will be completing a system checklist turned over to him that was started on the previous shift.

Which one of the following describes the action (s) required regarding usage of this procedure?

A. A notation must be made on the procedure cover sheet at the point which the previous shift turned the system checklist over.

B. The procedure must be replaced with a new working copy, transferring all signatures over to the new copy prior to use.

C. The procedure must be verified to be the latest revision prior to use by the oncoming Nuclear Station Operator.

D. No action is required provided the previous shift verified the procedure as being the latest revision.

Question Number	119
Question	A surveillance to demonstrate primary Containment Integrity was not performed within the allotted time frame, including the 25% extension. The LCO action states, "Without primary Containment Integrity, restore Containment Integrity within 1 hour or be in at least HOT STANDBY within the next 6 hours and in COLD SHUTDOWN within the following 30 hours." Which one of the following is correct concerning this condition? A. If Containment Integrity cannot be verified within 1 hour, the unit must be in HOT STANDBY within the following 6 hours. B. Containment Integrity is assumed to have been lost since the last surveillance, so the unit must be placed in COLD SHUTDOWN within the following 36 hours. C. Containment Integrity is assumed to have been lost since discovery of the missed surveillance, so the unit must be placed in HOT STANDBY within the following 6 hours. D. If Containment Integrity cannot be verified within 24 hours, the unit must be placed in HOT STANDBY within the following 6 hours.
Answer	D. If Containment Integrity cannot be verified within 24 hours, the unit must be placed in HOT STANDBY within the following 6 hours.
Allowed references	None
LP and objective	LO 1732700 Technical Specifications Lesson Plan
WCGS procedure - print references	Technical Specifications 3.6.1.1
NRC KA Topic	2.2.12 Knowledge of surveillance procedures
NRC KA topic importance factors	3.0
NRC 1122 KA - 10CFR55 41/43 tie	43.2/43.5/45.3
NRC difficulty rating	Not Available
WCGS difficulty rating and explanation	A2 The candidate must recognize that the action required if the surveillance is not met is less than 24 hours. He then must apply Specification 4.0.3 which allows you 24 hours to complete the surveillance before you apply non-compliance action requirements..
Distracter explanation and references	A. Incorrect: Specification 4.0.3 allows 24 hours to complete the surveillance. Credible in that these are required actions under some circumstances. B. Incorrect: Specification 4.0.3 allows 24 hours to complete the surveillance. Credible in that these are required actions under some circumstances. C. Incorrect: Specification 4.0.3 allows 24 hours to complete the surveillance. Credible in that these are required actions under some circumstances.

	D. Correct: This is the required action in accordance with 4.0.3.
NRC ES-401 Tier and section location	RO: Tier 3 Group 3
Question original source	South Texas Project
Additional comments	NRC comment - Not expected RO recall knowledge. Answer - Replaced the question. Replaced inadvertently missed with not performed.

Question: 119

A surveillance to demonstrate primary Containment Integrity was not performed within the allotted time frame, including the 25% extension. The LCO action states, "Without primary Containment Integrity, restore Containment Integrity within 1 hour or be in at least HOT STANDBY within the next 6 hours and in COLD SHUTDOWN within the following 30 hours."

Which one of the following is correct concerning this condition?

A. If Containment Integrity cannot be verified within 1 hour, the unit must be in HOT STANDBY within the following 6 hours.

B. Containment Integrity is assumed to have been lost since the last surveillance, so the unit must be placed in COLD SHUTDOWN within the following 36 hours.

C. Containment Integrity is assumed to have been lost since discovery of the missed surveillance, so the unit must be placed in HOT STANDBY within the following 6 hours.

D. If Containment Integrity cannot be verified within 24 hours, the unit must be placed in HOT STANDBY within the following 6 hours.

Question Number	120
Question	Which of the following is <u>not</u> required by "Reactor Trip System Instrumentation" LCO 3.3.1? A. Pressurizer pressure low. B. Pressurizer pressure high. C. Steam Generator level low-low. D. Steam Generator level high.
Answer	D. Steam Generator level high.
Allowed references	None
LP and objective	LO 1732700
WCGS procedure - print references	Technical Specifications ¾.3.1 Reactor Trip System Instrumentation
NRC KA Topic	2.2.22 Knowledge of limiting conditions for operations and safety limits.
NRC KA topic importance factors	3.4
NRC 1122 KA - 10CFR55 41/43 tie	43.2/45.2
NRC difficulty rating	Not Available
WCGS difficulty rating and explanation	K2 This is a direct recall item from the LCO from Reactor Trip Instrumentation in Tech Specs.
Distracter explanation and references	A. Incorrect: This is a required trip IAW Tech Specs. Credible in that it is a required Tech Specs trip. B. Incorrect: This is a required trip IAW Tech Specs. Credible in that it is a required Tech Specs trip. C. Incorrect: This is a required trip IAW Tech Specs. Credible in that it is a required Tech Specs trip. D. Correct: This is a turbine trip vice a Reactor Trip.
NRC ES-401 Tier and section location	RO: Tier 3 Group 3
Question original source	Songs 99
Additional comments	NRC comment - Not expected RO recall knowledge, essentially collection of T/F questions. Answer - Replaced the question. Replaced RPS with the Tech Spec number.

Question: 120

Which of the following is <u>not</u> required by "Reactor Trip System Instrumentation" LCO 3.3.1?

A. Pressurizer pressure low.

B. Pressurizer pressure high.

C. Steam Generator level low-low.

D. Steam Generator level high.

Question Number	121
Question	You are performing STS SE-002, "Manual Calculation of Reactor Thermal Power." You failed to notice that the Turbine Driven Auxiliary Feedwater Pump was running, injecting water into the steam generators. You are using the FEED FLOW calorimetric calculation. What, if any, inaccuracies will this have on the calculated power? A. There will be no effect since the calculation looks at the feed water temperature at each steam generator inlet. B. There will be no effect since the amount of feedwater flow decreased by the Auxiliary feedwater injection is approximately equal. C. The effect would cause calculated power to be higher than actual since the enthalpy of the feedwater is increased by the Auxiliary feedwater. D. The effect would cause calculated power to be lower than actual since the enthalpy of the feedwater is decreased by Auxiliary feedwater.
Answer	D. The effect would cause calculated power to be lower than actual since the enthalpy of the feedwater is decreased by Auxiliary feedwater.
Allowed references	None
LP and objective	SY1301501, Obj. 12
WCGS procedure - print references	STS SE-002, "Manual calculation of Reactor Thermal Power"
NRC KA Topic	2.2.34 Knowledge of the process for determining the internal and external effects on core reactivity.
NRC KA topic importance factors	2.8
NRC 1122 KA - 10CFR55 41/43 tie	43.6
NRC difficulty rating	Not Available
WCGS difficulty rating and explanation	A4 The operator must know the calorimetric equation. He must know the injection point for Aux Feedwater is downstream of the temperature sensing point used for calorimetric calculations and therefore will not be seen or used in the equation. He must understand the relationship between temperature and enthalpy and the effects of the lower temperature water on reactor power. He must be able to piece all of the above relationships together to come up with the correct answer.
Distracter explanation and references	A. Incorrect - The temperature is sensed prior to the injection of the aux feed flow. Credible if the injection point is not known in relation to the sensing point. B. Incorrect - The flow is significant. Credible in that the flow is considerably lower not equal. C. Incorrect - Calculated power will be lower than actual because Reactor power will have to increase to heat up the colder water. Credible as effects are consistent with an enthalpy increase.

	D. Correct
NRC ES-401 Tier and section location	RO: Tier 3
Question original source	Bank
Additional comments	NRC Comment - Negligible is a give-away term. Answer - Change distractor "B" wording from negligible to approximately equal.

Question: 121

You are performing STS SE-002, "Manual Calculation of Reactor Thermal Power." You failed to notice that the Turbine Driven Auxiliary Feedwater Pump was running, injecting water into the steam generators. You are using the FEED FLOW calorimetric calculation.

What, if any, inaccuracies will this have on the calculated power?

A. There will be no effect since the calculation looks at the feed water temperature at each steam generator inlet.

B. There will be no effect since the amount of feedwater flow decreased by the Auxiliary feedwater injection is approximately equal.

C. The effect would cause calculated power to be higher than actual since the enthalpy of the feedwater is increased by the Auxiliary feedwater.

D. The effect would cause calculated power to be lower than actual since the enthalpy of the feedwater is decreased by Auxiliary feedwater.

Question Number	122
Question	A valve four feet inside a valve room is producing a 1500 mrem/hr field at one foot (30 centimeters) from the valve. Which of the following is the proper posting/method of control for this room? A. Radiation Area B. High Radiation Area C. Locked High Radiation Area D. Very High Radiation Area
Answer	C.
Allowed references	None
LP and objective	LO1733204
WCGS procedure - print references	AP 25A-001 Radiation Protection Manual
NRC KA Topic	2.3.10
NRC KA topic importance factors	2.9
NRC 1122 KA - 10CFR55 41/43 tie	43.4/45.10
NRC difficulty rating	Not Available
WCGS difficulty rating and explanation	K2 This is a recall item.
Distracter explanation and references	A. Incorrect. This area is .005 rem in one hour at 30 cm. Credible in that the units, time and distance are all similar to the correct answer. B. Incorrect. This area is 1 rem in one hour at 30 cm. Credible in that the units, time and distance are all similar to the correct answer. C. Correct D. Incorrect. This area is 500 rads in one hour at 1m. Credible in that the units, time and distance are all similar to the correct answer.
NRC ES-401 Tier and section location	RO: Tier 3
Question original source	Bank
Additional comments	

Question 122

A valve four feet inside a valve room is producing a 1500 mrem/hr field at one foot (30 centimeters) from the valve.

Which of the following is the proper posting/method of control for this room?

A. Radiation Area

B. High Radiation Area

C. Locked High Radiation Area

D. Very High Radiation Area

Question Number	123
Question	Which one of the following instruments is required by the Accident Monitoring Instrumentation Technical Specification? A. Reactor Vessel Level Indicating System B. CTMT Atmosphere Radiation Process Monitors, GT RE 31 & 32 C. Movable Incore Detection System D. Seismic Monitoring System
Answer	A. Reactor Vessel Level Indicating System
Allowed references	None
LP and objective	LO1732700
WCGS procedure - print references	Technical Specification 3.3.3.6, Table 3.3-10
NRC KA Topic	2.4.3 Ability to identify post-accident instrumentation
NRC KA topic importance factors	3.5
NRC 1122 KA - 10CFR55 41/43 tie	41.6/45.4
NRC difficulty rating	Not Available
WCGS difficulty rating and explanation	K2 - Lower order question. Recall item of equipment controlled by Tech Specs.
Distracter explanation and references	A. Correct - Tech Spec 3.3.3.3, Table 3.3-10 lists this as a requirement. B. Incorrect - Ctmt Atmosphere Radiation monitors are covered in the Technical Requirements Manual. Credible in that Ctmt Atmosphere Radiation monitors are used for ESFAS instrumentation. C. Incorrect - Movable Incore systems are in the Technical Requirements Manual. Credible in that one may assume this system is used to assess core damage. D. Incorrect: The seismic monitoring system is in the Technical Requirements Manual. Credible in that all of these have some reference to accidents monitoring.
NRC ES-401 Tier and section location	RO: Tier 3
Question original source	New
Additional comments	NRC Comment - Beyond RO knowledge Answer - Lessened the knowledge by requiring only one memory item be recalled.

Question 123

Which one of the following instruments is required by the Accident Monitoring Instrumentation Technical Specification?

A. Reactor Vessel Level Indicating System

B. CTMT Atmosphere Radiation Process Monitors, GT RE 31 & 32

C. Movable Incore Detection System

D. Seismic Monitoring System

Question Number	124
Question	An operator is tasked with transporting a full five (5) gallon container of flammable liquid to a portable heater located in the south end of the "A" Diesel Generator (EDG) Room. Which one of the following describes the requirement to perform the task correctly? A. A Transient Ignition Source Permit must be in hand before transporting the liquid in an approved safety container. B. A Fire Protection Impairment Control Permit must be posted at the north and south doors of the "A" EDG Room before transporting in an approved safety container. C. A Breach Authorization Permit must be obtained and posted on the door to "A" NB Switchgear Room prior to entry with the liquid in an approved safety container. D. A Transient Combustible Materials Permit must be obtained prior to entry to the room and the liquid in an approved safety container.
Answer	D. A Transient Combustible Materials Permit must be obtained prior to entry to the room and the liquid in an approved safety container.
Allowed references	None
LP and objective	LO1733208 Fire Protection/Prevention Procedures / Obj. 15
WCGS procedure - print references	AP 10-102, "Control of Transient Combustible Materials"
NRC KA Topic	2.4.25 Knowledge of fire protection procedures.
NRC KA topic importance factors	2.9
NRC 1122 KA - 10CFR55 41/43 tie	41.10/45.13
NRC difficulty rating	Not Available
WCGS difficulty rating and explanation	K3 This is a recall item of fire protection/prevention procedures.
Distracter explanation and references	A. Incorrect: A flammable liquid is not a transient ignition source. This is a credible distracter because this is an approved procedure pertaining to Fire Protection. B. Incorrect: An impairment of a system or structure is not taking place. This is a credible distracter because this is an approved procedure pertaining to Fire Protection. C. Incorrect: No breach of a controlled area. This is a credible distracter because this is an approved procedure pertaining to Fire Protection. D. Correct.
NRC ES-401 Tier and section location	RO: Tier 3
Question original	New

source	
Additional comments	NRC Comment - Make "A" clearly wrong. "B" & "D: don't refer to an approved container. Answer - Changed distractors A, B, and D to indicate you are transporting the liquid in a safety container. The examinee does not need to memorize whether the container is a safety container or not. Distractor "A" is wrong in that the material is a "combustible" material not an "ignition source" as defined by procedure.

Question: 124

An operator is tasked with transporting a full five (5) gallon container of flammable liquid to a portable heater located in the south end of the "A" Diesel Generator (EDG) Room.

Which one of the following describes the requirement to perform the task correctly?

A. A Transient Ignition Source Permit must be in hand before transporting the liquid in an approved safety container.

B. A Fire Protection Impairment Control Permit must be posted at the north and south doors of the "A" EDG Room before transporting in an approved safety container.

C. A Breach Authorization Permit must be obtained and posted on the door to "A" NB Switchgear Room prior to entry with the liquid in an approved safety container.

D. A Transient Combustible Materials Permit must be obtained prior to entry to the room and the liquid in an approved safety container.

Question Number	125
Question	The Control Room is being evacuated due to dense smoke from a fire in the back panel area. The Supervising Operator has directed the Reactor Operator to perform the immediate actions of OFN RP-017, "Control Room Evacuation," Attachment C. Which one of the following correctly identifies the first three <u>immediate actions</u> the Reactor Operator will perform? A. 1) Ensure CRVIS is actuated, 2) Evacuate the Control Room, and 3) Open NB02 DC control power breaker. B. 1) Trip the reactor, 2) Fast close MSIV's, and 3) Evacuate the Control Room. C. 1) Evacuate the Control Room, 2) Open PZR PORV A DC control power breaker, and 3) Open PZR PORV B DC control power breaker. D. 1) Ensure CRVIS is actuated, 2) Evacuate the Control Room, and 3) Obtain a radio(Ch 4) and flashlight from a emergency locker.
Answer	C. 1) Evacuate the Control Room, 2) Open PZR PORV A DC control power breaker, and 3) Open PZR PORV B DC control power breaker.
Allowed references	None
LP and objective	LO1732427
WCGS procedure - print references	OFN RP-017, "Control Room Evacuation"
NRC KA Topic	2.4.49 Ability to perform without reference to procedures those actions that require immediate operation of system components and controls.
NRC KA topic importance factors	4.0
NRC 1122 KA - 10CFR55 41/43 tie	41.10/43.2/45.6
NRC difficulty rating	Not Available
WCGS difficulty rating and explanation	K3 The operator is expected to recall multiple immediate actions in an attachment for evacuation of the Control Room. He must discern between actions contained in the body of the procedure (i.e., not an attachment) prior to physical evacuation of the control room. These distractors are necessary to be performed but are NOT Immediate actions.
Distracter explanation and references	A. Incorrect: These are not IMMEDIATE ACTION steps. Credible in that these are actions contained in the body of the procedure to be performed under the direction of the Supervising Operator. B. These are not IMMEDIATE ACTION steps. Credible in that these are actions contained in the body of the procedure to be performed under the direction of the Supervising Operator. C. Correct D. These are not IMMEDIATE ACTION steps. Credible in that these are actions contained in the body of the procedure to be performed

	under the direction of the Supervising Operator.
NRC ES-401 Tier and section location	RO: Tier 3
Question original source	Modified Bank
Additional comments	NRC comment - "C" too unique. Its the only one with breakers referenced. Answer - Revised distractors A, B, C, and D, and the stem.

Question: 125

The Control Room is being evacuated due to dense smoke from a fire in the back panel area. The Supervising Operator has directed the Reactor Operator to perform the immediate actions of OFN RP-017, "Control Room Evacuation," Attachment C.

Which one of the following correctly identifies the first three immediate actions the Reactor Operator will perform?

A. 1) Ensure CRVIS is actuated, 2) Evacuate the Control Room, and 3) Open NB02 DC control power breaker.

B. 1) Trip the reactor, 2) Fast close MSIV's, and 3) Evacuate the Control Room.

C. 1) Evacuate the Control Room, 2) Open PZR PORV A DC control power breaker, and 3) Open PZR PORV B DC control power breaker.

D. 1) Ensure CRVIS is actuated, 2) Evacuate the Control Room, and 3) Obtain a radio(Ch 4) and flashlight from a emergency locker.