December 6, 1999

Mr. Guy G. Campbell, Vice President - Nuclear
FirstEnergy Nuclear Operating Company
5501 North State Route 2
Oak Harbor, OH 43449-9760

SUBJECT: FINAL ACCIDENT SEQUENCE PRECURSOR ANALYSIS OF EVENT AT DAVIS-BESSE NUCLEAR POWER STATION, UNIT 1

Dear Mr. Campbell:

Enclosed for your information is a copy of the final Accident Sequence Precursor (ASP) analysis of the operational condition at Davis-Besse Nuclear Power Station, Unit 1, reported in Licensee Event Report (LER) No. 346/98-011. We prepared this final analysis (Enclosure 1) based on our review and evaluation of your comments on the preliminary analysis. Enclosure 2 contains our responses to comments provided in your letter of November 9, 1999. Our review of your comments employed the criteria contained in the material which accompanied the preliminary analysis. The results of the final analysis indicate that this event is a precursor for 1998.

Please contact me at 301-415-1364 if you have any questions regarding the enclosures. We recognize and appreciate the effort expended by you and your staff in reviewing and providing comments on the preliminary analysis.

Sincerely,
Original Signed By
Douglas V. Pickett, Senior Project Manager, Section 2
Project Directorate III
Division of Licensing Project Management
Office of Nuclear Reactor Regulation

Docket No. 50-346

Enclosures: As stated

cc w/encls: See next page

Distribution

File Center	OGC	SBajwa
PUBLIC	ACRS	AMendiola
PDIII - R/F	DPickett	GGrant, RIII
PO'Reilly, RES	THarris	

DOCUMENT NAME: G:\PDIII-2\DAVISBES\ACCIDENT SEQUENCE PRECURSOR ANALYSIS.WPD
TO RECEIVE A COPY OF THIS DOCUMENT, INDICATE IN THE BOX: "C" = COPY WITHOUT ENCLOSURES "E" = COPY WITH ENCLOSURES "N"

OFFICE	PM:PDIII-2	E	LA:PDIII-2		RES		SC:PDIII-2			
NAME	DPickett		THarris		PO'Reilly*		AMendiola			
DATE	12/ 3 /99		12/ 3 /99		12/ 01 /99		12/ 6 /99			

OFFICIAL RECORD COPY

*See PO'Reilly to MGamberoni Note dated 12/1/99

DF01

PDR ADOCK 05000346

cc:

Mary E. O'Reilly
FirstEnergy
76 South Main Street
Akron, OH 44308

James L. Freels
Manager - Regulatory Affairs
FirstEnergy Nuclear Operating Company
Davis-Besse Nuclear Power Station
5501 North State - Route 2
Oak Harbor, OH 43449-9760

Jay E. Silberg, Esq.
Shaw, Pittman, Potts
and Trowbridge
2300 N Street, NW.
Washington, DC 20037

Regional Administrator
U.S. Nuclear Regulatory Commission
801 Warrenville Road
Lisle, IL 60523-4351

Michael A. Schoppman
Framatome Technologies Incorporated
1700 Rockville Pike, Suite 525
Rockville, MD 20852

Resident Inspector
U.S. Nuclear Regulatory Commission
5503 North State Route 2
Oak Harbor, OH 43449-9760

James H. Lash, Plant Manager
FirstEnergy Nuclear Operating Company
Davis-Besse Nuclear Power Station
5501 North State Route 2
Oak Harbor, OH 43449-9760

Robert E. Owen, Chief
Bureau of Radiological Health
Service
Ohio Department of Health
P.O. Box 118
Columbus, OH 43266-0118

James R. Williams, Executive Director
Ohio Emergency Management Agency
2855 West Dublin Granville Road
Columbus, OH 43235-2206

Director
Ohio Department of Commerce
Division of Industrial Compliance
Bureau of Operations & Maintenance
6606 Tussing Road
P.O. Box 4009
Reynoldsburg, OH 43068-9009

Ohio Environmental Protection Agency
DERR--Compliance Unit
ATTN: Zack A. Clayton
P.O. Box 1049
Columbus, OH 43266-0149

State of Ohio
Public Utilities Commission
180 East Broad Street
Columbus, OH 43266-0573

Attorney General
Department of Attorney
30 East Broad Street
Columbus, OH 43216

President, Board of County
Commissioners of Ottawa County
Port Clinton, OH 43252

LER No. 346/98-011

Event Description: Manual Reactor Trip Due to Component Cooling System Leak and De-energizing of Safety-Related Bus D1 and Non-Safety-Related Bus D2

Date of Event: October 14, 1998

Plant: Davis-Besse

Event Summary

The Davis-Besse plant was in Mode 1 at 100 percent power at 1356 on October 14, 1998, when an electrical bus D1, bus D2, and station blackout diesel generator lockout occurred (Ref. 1). The bus lockout occurred when an electrician rolled circuit breaker AACD1 back into its cubicle after performing preventive maintenance. As the breaker was rolled back, the metal breaker frame contacted a terminal screw of a time-over-current relay mounted on the cubicle door, which provides backup ground protection for buses D1 and D2. Loss of bus D2 caused the loss of condensate pump 1-2 and, as a result, the operators initiated a plant power reduction. Prior to the lockout of buses D1 and D2, component cooling water pump (CCWP) 1-2 was in operation and supplying non-essential loads. When, bus D1 was lost, CCWP 1-2 tripped. Tripping of CCWP 1-2 caused CCWP 1-1 to start automatically. The isolation valve which isolates the non-essential CCW supply from CCWP-1 opened after a 30 second time delay. During that time delay, there was no CCW flow through the RCS letdown coolers and the hot RCS coolant heated up the CCW inside the coolers. When the isolation valve from CCWP-1 to the non-essential CCW header opened, introduction of sub-cooled CCW into the RCS letdown coolers caused the steam bubbles to collapse and created a pressure spike. This short duration pressure spike damaged one of the two rupture disks in letdown cooler 1-1. At 1512, essential buses D1 and F1 were recovered. CCWP 1-2 was restarted at 1523. When CCWP 1-2 was restarted, the CCW surge tank level dropped rapidly due to rapid loss of water from the CCW system. This prompted the operators to trip the reactor at 1523. At 1712, CCW was restored and the plant was stabilized. The conditional core damage probability (CCDP) estimated for this event is 1.5×10^{-5}.

Event Description

At 1356 hours, on October 14, 1998, Davis-Besse was operating at 100 percent power, when an electrical bus D1, bus D2, and station blackout diesel generator lockout occurred. At this time, bus tie transformer AC, which is also capable of providing backup power to bus D1, was de-energized. Figure 1 shows the arrangement of buses D1 and D2 and the associated breakers. After performing routine preventive maintenance on circuit breaker AACD1, an electrician rolled the breaker back into its cubicle. A misalignment between the floor rail and circuit breaker resulted in the breaker frame contacting a terminal screw. As a result, non-essential bus D2 and essential bus D1 de-energized. The station blackout diesel generator output breaker (AD213) was also locked out. Emergency diesel generator (EDG) 1-2 started on low voltage. However, EDG output breaker AD101 could not close, since it was locked out. EDG 1-2 was shut down at 1401, since no

component cooling water (CCW) was available for the EDG. Due to the lockout of D1 and D2, CCWP 1-2 and condensate pump 1-2 were lost. In addition, all normal station lighting supplied by bus D2 was lost. Operators initiated a plant power reduction due to the loss of condensate pump 1-2, with the intent of stabilizing reactor power at a level within the capacity of the two available condensate pumps. The power reduction was stopped at approximately 87 percent power at 1430 hours. Auxiliary feedwater (AFW) pump AFP 1-1 was out of service for testing prior to the lockout event. However, it was declared operable at 1415 hours (19 minutes after the bus lockout). AFP 1-2 was made inoperable as a result of the lockout.

When the D1/D2 bus lockout occurred, CCWP 1-2 was operating and supplying non-essential CCW loads inside containment (See Figure 2). Troubleshooting was in progress on the CCWP 1-1 discharge flow indicating switch FIS1422D. When the bus lockout occurred and CCWP 1-2 tripped, CCWP 1-1 automatically started and CCW Loop 1 non-essential valves began to open after a thirty-second time delay. When CCWP 1-2 tripped, even though CCW Loop 2 non-essential isolation valves received signals to close, they could not do so because of the D1/D2 bus lockout. During the 30 second time delay for the CCW Loop 1 non-essential isolation valves to begin stroking open, no flow was provided to the RCS letdown coolers. As a result of the hot reactor coolant flowing through the letdown coolers, the CCW in the coolers generated steam. When the Loop 1 isolation valves opened and re-initiated flow to the letdown coolers, the sub-cooled CCW caused the steam pockets to collapse. The resultant pressure spike damaged one of the two rupture disks on letdown cooler 1-1. Alarms received regarding operation of the containment normal sump pump and low level in the CCW surge tank indicated that a leak of an estimated 2 to 5 gpm from the CCW system had started in containment.

By 1512 (76 minutes after the bus lockout), the operators had fixed the problem in bus cubicle AACD1. Restoration of electrical buses began at that time. When 480 volt essential bus F1 was re-energized at 1512, power was restored to the CCW Loop 2 non-essential isolation valves. As a result of an "open" signal from FIS 1422D and a "close" signal from the breaker interlocks, CCW Loop 2 non-essential isolation valves started to cycle open and closed. The valves continued to cycle until CCWP 1-2 was started. At 1517 hours, service water pump (SWP) 1-2 was restarted, followed by the restart of CCWP 1-2 at 1523 hours. When CCWP 1-2 was started, the CCW surge tank level decreased rapidly. At the level of 35 inches and decreasing, the reactor and the reactor coolant pumps were tripped. When the reactor and the reactor coolant pumps were tripped, the AFW system actuated. Natural circulation conditions were fully developed approximately four minutes after the RCPs were tripped.

Following the reactor trip, the following events occurred: (a) the operators' attempt to start makeup pump 1-2 failed, (b) steam generator (SG) outlet pressure increased due to the closing of the main turbine stop valves, (c) the turbine bypass valves (TBVs) and the atmospheric vent valves (AVVs) opened and the main steam safety valves (MSSVs) lifted in response to the increasing secondary system pressure, (d) the MSSVs and the AVVs closed as SG outlet pressure decreased, and (e) the TBVs throttled closed as they attempted to control SG outlet pressure at the post-trip setpoint of approximately 995 psig. Following the reactor trip, MSSV SP17B7 was identified to be not fully closed. However, main steam pressure was manually reduced to 920 psig, and MSSV SP17B7 reseated. While actions were underway to investigate and recover from the loss of CCW to the containment, and to recover electrical loads that were lost, the operators also had to initiate actions to reduce secondary system steam loads to terminate the overcooling of the reactor coolant system (RCS).

Plant operators made preparations to restore CCW to the containment while leaving CCW to the letdown coolers isolated. At 1712, CCW was restored to the containment header to provide cooling for the control rod drives and reactor coolant pumps (RCPs). Shortly thereafter, RCPs 2-2 and 1-2 were started, restoring forced RCS coolant flow.

Additional Event-Related Information

Essential bus D1 and non-essential bus D2 supply power to components that are needed for normal and emergency plant operation. Therefore, loss of these buses and the resulting changes to the RCS power level increased the likelihood of a reactor trip. The power reduction started at 1356 from 100% power, and was terminated at 87% at 1430.

The damage to the RCS letdown heat exchanger worsened when CCWP 1-2 was started after recovery of power. The CCW surge tank level dropped rapidly as a result. CCW containment isolation valves CC 1411A and 1411B functioned as designed to isolate letdown cooler 1-1 within 10 seconds on low surge tank level. Successful isolation maintained CCW system inventory and prevented net positive suction head problems for the CCW pumps. As Figure 2 shows, successful isolation of these valves not only affects the RCS letdown cooler, it also affects the CCW supply to all of the RCPs and control rod drives. That is, when either CC1411A or CC1411B closes, CCW cooling of the RCP seals will be lost. However, there are valves that can be remotely closed to allow isolation of the letdown heat exchangers while providing RCP cooling.

As shown in Figure 3, Davis-Besse is equipped with two turbine-driven auxiliary feedwater pumps (AFP 1-1 and AFP 1-2). If bus D1 is available, either of these pumps can be used to feed either of the steam generators. However, bus D1 was de-energized, which de-energized essential bus F1. Bus F1 powers motor-operated valve AFW-3871, which is normally closed. Therefore, when bus D1 was lost, the capability to inject steam generator SG 1-1 from AFP 1-2 was lost. Even though there is a motor-driven feed pump at Davis-Besse, it was not available, since it is powered from bus D2. As a result, if AFP 1-1 had failed, there would have been no capability to feed SG 1-1. Without feedwater, the steam supply from SG 1-1 would fail.

If power is available to all buses, either of the steam generators can provide steam to either of the turbine-driven AFPs. During the scenario where AFP 1-1 is failed, there will be no steam available from SG 1-1. As a result, if bus F1 is failed and AFP 1-1 fails, only SG 1-2 has the capability to supply steam to AFP 1-2. However, as Figure 4 shows, when bus D1 is failed, MOV 107 (normally closed) cannot be opened. That is, SG 1-2 cannot provide steam to the turbine of AFP 1-2.

In summary, if AFP 1-1 fails when bus D1 is de-energized, SG 1-1 stops generating steam due to lack of feedwater injection, and SG 1-2 cannot provide steam to AFP 1-2. Therefore, failure of AFP 1-1 with bus D1 de-energized leads to the failure of AFP 1-2.

According to Reference 2, when both trains of makeup pumps are available to perform feed-and-bleed cooling, opening of both pressurizer safety valves is adequate to perform the bleed function. The pressurizer pilot - operated relief valve (PORV) is not essential. However, when buses D1 and D2 were lost, makeup pump 1-2 was not available. Under that condition, the PORV is essential to perform feed-and-bleed cooling. The

pressurizer PORV is powered from Division 2 DC power. When buses D1 and D2 are lost, Division 2 DC power relies upon the Division 2 battery. When the battery's charge has been depleted, the PORV will fail and, as a result, feed-and-bleed cooling will fail. Therefore, if bus D1 is not recovered, the battery that powers the pressurizer PORV will deplete.

Modeling Assumptions

In modeling this event, three likely scenarios were examined.

Scenario 1

The first scenario considered was a reactor trip followed by unavailability of main feedwater, auxiliary feedwater and high pressure injection (HPI) cooling (also known as feed-and-bleed cooling). As described in the previous section, if buses D1 and D2 are lost, failure of AFW pump Train 1 can fail AFP 1-2, since there is no capability to provide steam from steam generator SG 1-1 to AFP 1-2. The modeling assumptions related to this sequence are discussed below.

Scenario 2

The second scenario consists of loss of all CCW due to a rupture in the RCS letdown heat exchanger, failure to isolate the rupture (automatically or via operator action) followed by the operator failing to trip the RCPs after loss of CCW, thus leading to a seal LOCA.

Scenario 3

The third scenario consists of loss of all CCW as in the second sequence. In this sequence, the operator successfully trips the RCPs. However, failure to recover CCW and restore RCP seal cooling prior to seal damage leads to a RCP seal LOCA.

Probability of Reactor Trip

When buses D1 and D2 were lost, the reactor did not trip. However, several systems or system trains that rely on buses D1 or D2 (condensate pump 1-2, cooling water pump 2, station air compressor, emergency air compressor, and heater drain pump 2) were lost. As a result, the operators had to reduce the power level from 100% to 87% over a 34-minute time frame (from 1356 to 1430). The operators tripped the plant at 1523. The loss of a single train of essential and non-essential busses and changing the power level increased the likelihood of a reactor trip. Based on Reference 3 (page 8-12), there were 10 reactor trips during 148 controlled plant shutdowns. Therefore, the probability of a reactor trip during the event can be approximated by a value of 0.068 (10/148). In order to accommodate this increased likelihood of a reactor trip, the basic event IE-TRNS in the SAPHIRE-based model for Davis-Besse was changed from its current value to 0.068.

Availability of Main Feedwater

Reference 1 notes the loss of bus D2 resulted in the loss of condensate pump 1-2. In addition to this, the station air compressor C140 is also powered from bus D2. Moreover, the emergency air compressor that is powered from bus F7 would also not be available. One train of the turbine plant cooling system would also have been lost due to loss of bus D2. In consideration of all these dependencies, it was pessimistically assumed that the reactor trip was caused by the loss of or a transient of the main feedwater system and that the main feedwater system would not be available to remove decay heat after tripping the reactor with buses D1 and D2 de-energized.

Availability of Motor-Driven Startup Feed Pump

In addition to the two turbine-driven AFW pumps and one motor-driven feed pump powered from bus D2, Davis-Besse has another motor-driven pump (startup feed pump) that can back up the AFW system. This was the original "motor-driven feed pump," but once the new motor-driven feed pump had been installed, it was essentially abandoned in place. Since that time, however, the pump has been put back into the plant procedures, and it should be available if needed. It is powered from bus C2. Its breaker must be racked in, and there are manual isolation valves that must be opened locally. For these reasons, the availability of this pump is lower than that for the new motor-driven feed pump (which can be started from the control room and acts just like an AFW pump). If buses D1/D2 had remained unavailable, main feedwater had been lost, and the AFW pumps were unavailable, the startup feed pump could still have been used.

Feed-and-Bleed Cooling Failure

If steam generator cooling using the AFW and MFW fails, decay heat can be removed by feed-and-bleed cooling. According to the Davis-Besse IPE (Ref. 2), when only one makeup pump train is available (makeup pump 1-2 did not start since bus D1 was unavailable), the pressurizer PORV is essential for feed-and-bleed cooling. This PORV requires power from Division 2. With bus D1 unavailable, the charger is unavailable and the battery will deplete. If the DC electrical loads are not tripped, a typical battery at a nuclear power plant can be expected to last for approximately 2 hours. During the event at Davis-Besse, the buses were lost for 76 minutes. Assuming a mean repair time (time to recover the lost essential bus) of 75 minutes and an exponential distribution, the probability of non-recovery of DC power in 2 hours was estimated to be 0.2. The basic event D2N-RECHARGE was added to the SAPHIRE-based model for Davis-Besse to model this failure.

Potential of Losing All CCW

A second scenario considered for modeling in this analysis was the potential loss of all CCW due to the rupture in the RCS letdown cooler. The design of the CCW is such that, when the running CCW stops and the standby CCW starts, steam will form inside the RCS letdown heat exchanger during the 30 seconds it takes to open the isolation valve from the standby CCW train to its non-essential supply. As a result, during this event, the start of the standby pump caused the steam to collapse and cause damage to a rupture disk (isolable leakage of 2-5 gpm) in the letdown heat exchanger. Subsequently, after electric power was recovered, when the second CCW pump was re-started, the CCW surge tank level decreased rapidly (the leak got bigger). It was only

when pump 1-2 (which had been operating prior to the loss of buses D1 and D2) was restarted that the draw down of the surge tank level due to the leak through the letdown cooler rupture disk was experienced. Only if the operators had failed to isolate the non-essential loads and had aligned pump 1-1 to supply them from the second side of the surge tank (Davis-Besse's CCW surge tank has two sides with a dividing wall), would the surge tank have been depleted fully.

CCW pump 1-3 was the spare pump at the time of the event. This pump can be aligned electrically to either Division 1 (bus C1) or Division 2 (bus D1). Thus, it could have been aligned as a backup to pump 1-1, if it had failed to start, or to pump 1-2 (after power was restored to bus D1). This would have required manually racking in the pump breaker at the 4kV switchgear, and opening two manual isolation valves. These actions are covered clearly in the plant procedures, and the IPE gives reasonable credit to their success.

There is an abnormal procedure for loss of CCW that specifies recovery actions using the spare pump. If there were no CCW, it is assumed that the makeup pump(s) would fail due to lack of cooling within about 10 minutes. The operators would then have about another 15 minutes to restore CCW to the RCP seals if the pumps were not tripped. After that, a seal LOCA would result, and HPI would be actuated. The HPI pumps are expected to operate for at least an hour without CCW. Thus, the operators would have on the order of one hour and 25 minutes to restore CCW.

The RCS can be cooled down quite rapidly by AFW. If the RCPs are tripped (as called for by the procedure), however, the ability to cool down is diminished. With no CCW, there would be no makeup to compensate for RCS shrinkage. Thus, there would be a tendency to draw a bubble in the RCS due to the cooldown, which would interrupt natural circulation through the steam generators. This should not be permanent (i.e., circulation, and hence cooling, should be restored as the RCS heats back up), but it would certainly impede the cooldown efforts. Of course, this is largely a moot point if tripping the RCPs is assumed to preclude a seal failure.

Based on the above information, two core damage sequences appear credible. In the first sequence, automatic signals fail to isolate the break in the RCS letdown heat exchanger, the operator fails to back up the automatic capability and manually isolate the break in a timely manner, and the operator fails to trip the RCPs. In the second sequence, the automatic signals fail to isolate the break, the operator fails to provide manual backup, and the operator successfully trips the RCPs. However, CCW is not recovered prior to seal failure.

There are two valves (CC1411A and 1411B) that would receive automatic signals to isolate the non-essential CCW header on low surge tank level. If rupture occurred in the RCS letdown cooler, and if both valves failed to isolate the rupture, then CCW would continue to drain down. Note that CC 1411A and B are two redundant isolation valves that receive isolation signals from redundant sources. Further, the surge tank low level alarm will also let the operator know of the need to isolate (as it did during this event). Considering the two redundant auto signals and the operator's capability to recognize and intervene in response to low surge tank level and the containment normal sump pump alarms, the common cause mechanical failure of the two isolation valves to close will dominate. The SAPHIRE-based model for Davis-Besse uses a probability of 2.6×10^{-4} for the common cause failure of two MOVs to fail to close.

If CCW fails, the operator is instructed to trip the RCPs. There are alarms that will indicate to the operator if the RCP seal temperature is high. Based on Swain and Guttman (Ref. 4), under this transient condition, a probability of 1.0×10^{-3} represents an upper bound for the probability of the operator failing to stop the RCPs by the operator. Therefore, the probability of a RCP seal LOCA is less than 2.6×10^{-7} (= $2.6 \times 10^{-4} \times 1.0 \times 10^{-3}$). Failure to trip the RCPs will lead to an RCP seal LOCA. The RCP seal LOCA can be mitigated if CCW is be recovered before core uncovery. Therefore, the core damage probability for this sequence will be well below 1.0×10^{-6}.

The core damage probability for the second sequence will be the product of the probability of failing to isolate the heat exchanger (2.6×10^{-4}), the probability of failing to recover component cooling water prior to seal failure, and the probability of failure of high pressure injection, given a seal LOCA occurs.

Potential for RCP Seal LOCA given loss of CCW

Without CCW, RCP seal cooling is unavailable. Unavailability of RCP seal cooling may result in an RCP seal failure and a small-break LOCA. In this analysis, the probability of an RCP seal LOCA was assumed to be zero up to 60 minutes after a loss of seal cooling. Between 60 minutes and 90 minutes, the probability of an RCP seal LOCA was assumed to increase linearly to 0.083 at 1.5 hours (i.e., 2.8×10^{-3}/minute), after which no additional seal failures were assumed to occur. This type of seal failure model is similar to that used in the ASP Program for modeling station blackout sequences (see ORNL/LTR-89/11, *Revised LOOP Recovery and RCP Seal LOCA models, August 1989).*

HPI Pump Bearing Lube Oil Cooling failure

At Davis-Besse, the HPI pump bearing oil is cooled by CCW. However, in the event of a loss of CCW event, the HPI pumps will not fail immediately. That is, if CCW can be recovered within a reasonable time, failure of HPI and core uncovery can be averted. First, if CCW is lost and not recovered prior to seal failure, a finite time can elapse prior to core uncovery. For Davis Besse, using information provided in Table 3-11 of the IPE (basic event UHAMUISE), it was assumed that a period of 1 hour is available to mitigate the accident before core uncovery occurs. If the operators choose to start the HPI pumps without CCW (since running the HPI pumps without lube oil cooling is preferred over uncovering the core), the pumps can run for a finite time period prior to failure due to lack of lube oil cooling. Considering the uncertainties related to operator actions and timing (e.g., whether the operators would secure the HPI pumps when they auto start without CCW, whether 1 pump will be allowed to run while the other is secured), this analysis assumed 1 hour would be available to run the HPI pumps prior to failure due to lube oil cooling. The combined effect of the time to core uncovery and the time that the HPI pumps can run without lube oil cooling failing leads to the assumption that there are 2 hours available following an RCP seal LOCA with CCW unavailable in which to recover CCW in order to avoid core damage.

Therefore, the probability of this accident sequence, which involves (a) the loss of CCW as a result of failing to isolate the heat exchanger (2.6×10^{-4}), (b) failing to recover component cooling water prior to RCP seal failure, and (c) failing to recover HPI (or makeup) pumps prior to core uncovery, can be calculated as follows:

$$= 2.6 \times 10^{-4} \times \int f_{SL}(t) \times P_{ccwnr}(t+2)\, dt$$

where, $f_{SL}(t)$ is the failure rate for RCP seals at time 't' and $P_{ccwnr}(t)$ is the probability of non-recovery of CCW at time 't'. Time 't' is measured from the time of losing CCW. In the model used here, $f_{SL}(t)$ is zero between 0 and 60 minutes. It is 2.8×10^{-3}/minute between 60 minute and 90 minutes. It is zero when t is greater than 90 minutes.

$P_{ccwnr}(t)$ can be modeled using an exponential model (i.e., $P_{ccwnr}(t) = e^{-\lambda t}$ where λ is the failure rate). Recovery of CCW would require manual isolation of the CCW non-essential containment header, refilling the CCW piping and surge tank, venting the system, and potentially realigning the CCW system to allow use of the spare pump. A review of Table 3-12 in the 1993 IPE submittal identified several recovery actions in the 1- 4 hour and greater than 4 hour time frames that appear to be similar to what is required in this case. For these actions, the IPE estimates failure probabilities on the 0.03 - 0.05 range. Assuming a non recovery probability of 0.03 at 4 hours will result in λ being equal to .88 per hour or 0.015 per minute. Therefore, the sequence probability will be,

$$= 2.6\times10^{-4} \times {}_{60}\int^{90} 2.8 \times 10^{-3} \times e^{-0.0146(t+120)}\, dt$$
$$= 1.3\times10^{-6}$$

Analysis Results

Three different scenarios were considered. The CCDP associated with scenario #1 (reactor trip followed by loss of steam generator cooling), estimated using the SAPHIRE-based model for Davis-Besse is 1.4×10^{-5}. The CCDP associated with scenario #2 (loss of CCW followed by the operators failing to trip RCPs leading to a RCP seal LOCA was screened out since it is well below the precursor threshold value of 1.0×10^{-6}. Sequence #3 (loss of CCW, RCPs tripped, non-recovery of CCW leading to RCP seal LOCA, and non-recovery of CCW leading to HPI failure) has a CCDP of 1.3×10^{-6}. Therefore, the total CCDP is estimated to be 1.5×10^{-5}. The dominant sequence for this event involves a reactor trip while power is unavailable to buses D1 and D2, in which main feedwater is unavailable, turbine-driven auxiliary feedwater pump TDAFP 1-1 fails, the startup feed pump is unable to provide steam generator cooling, and feed-and-bleed cooling fails due to depletion of the Division 2 battery prior to recovery of Division 2 essential bus D1. The dominant sequence, Sequence 20, is highlighted on the event tree in Figure 5. It involves:

- a reactor trip while changing power level,
- unavailability of main feedwater,
- failure of turbine-driven AFP 1-1 (which fails AFP 1-2 as well),
- failure of the motor-driven startup feed pump,
- failure to recover bus D1 before the Division 2 battery is depleted.

Definitions and probabilities for selected basic events are shown in Table 1. The conditional probabilities associated with the highest probability sequences are shown in Table 2. Table 3 lists the sequence logic associated with the sequences listed in Table 2. Table 4 describes the system names associated with the dominant sequences. Minimal cut sets associated with the dominant sequences are shown in Table 5.

Acronyms

AFW	auxiliary feedwater
AVV	atmospheric vent valve
CCDP	conditional core damage probability
CDP	core damage probability
CCW	component cooling water
EDG	emergency diesel generator
IPE	individual plant examination
MSSV	main steam safety valve
PORV	power operated relief valve
RCP	reactor coolant pumps
RCS	reactor coolant system
SPAR	standardized plant analysis risk
TBV	turbine bypass valve

References

1. LER 346/98-011, "Manual Reactor Trip Due to Component Cooling Water System Leak." October 13, 1998.

2. David Besse Unit 1, Individual Plant Examination.

3. J.D. Andrachek, et. al., "Probabilistic Risk Analysis of the RPS and ESFAS Test Times and Completion Times," WCAP-14334-NP-A, Rev. 1, May 1995.

4. A.D. Swain and H.E. Guttmann, "Handbook of Human Reliability Analysis with Emphasis on Nuclear Power Plant Application," NUREG/CR-1278, August 1983.

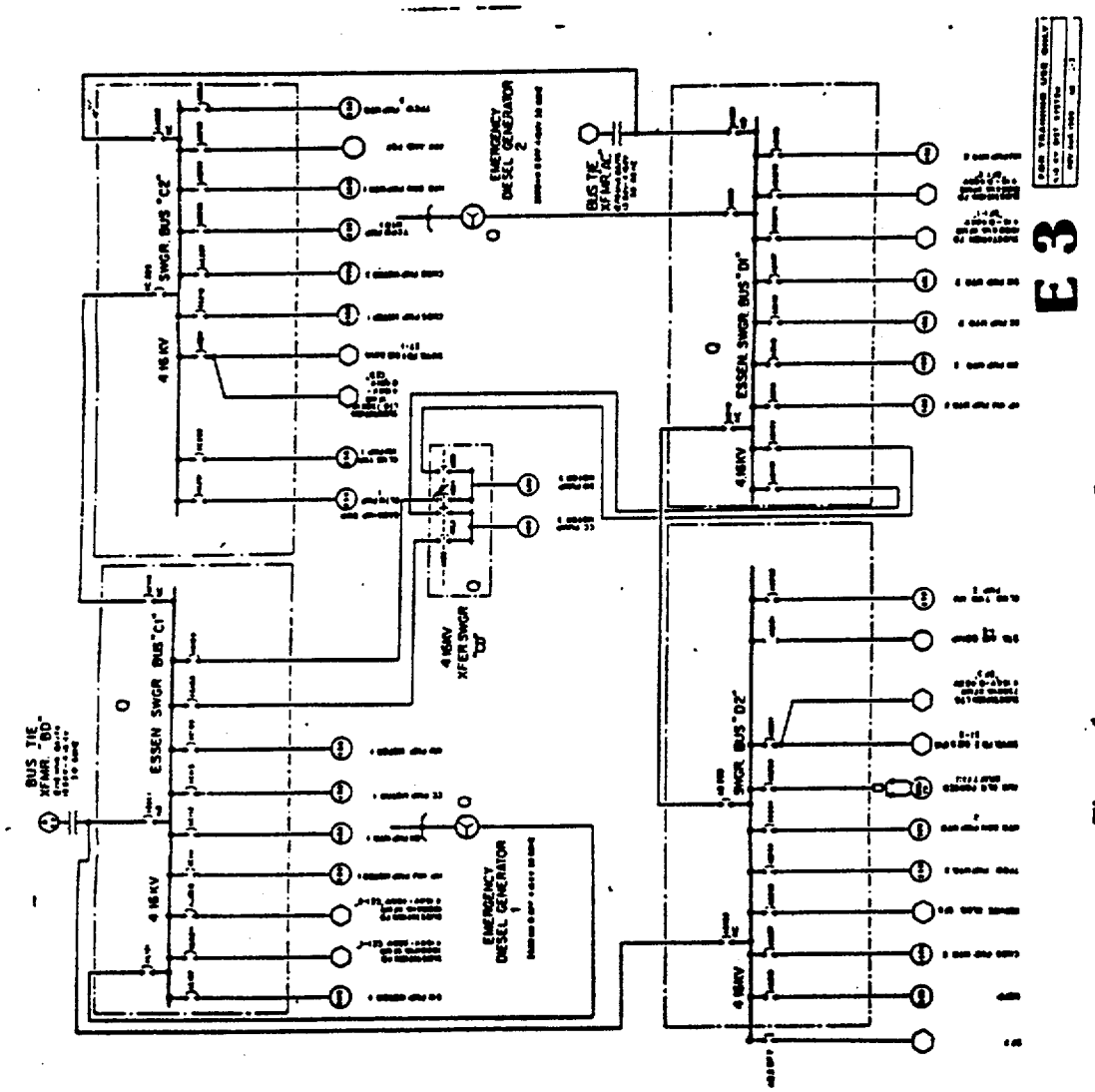
BUS TIE XFMR. "BD"
ESSEN SWGR. BUS "C1"
4.16 KV
SWGR. BUS "C2"
4.16 KV
EMERGENCY DIESEL GENERATOR 1
EMERGENCY DIESEL GENERATOR 2
4.16KV XFER SWGR "D"
BUS TIE XFMR. "AC"
ESSEN SWGR. BUS "D1"
4.16KV
SWGR. BUS "D2"
4.16KV
E3

Figure 1.

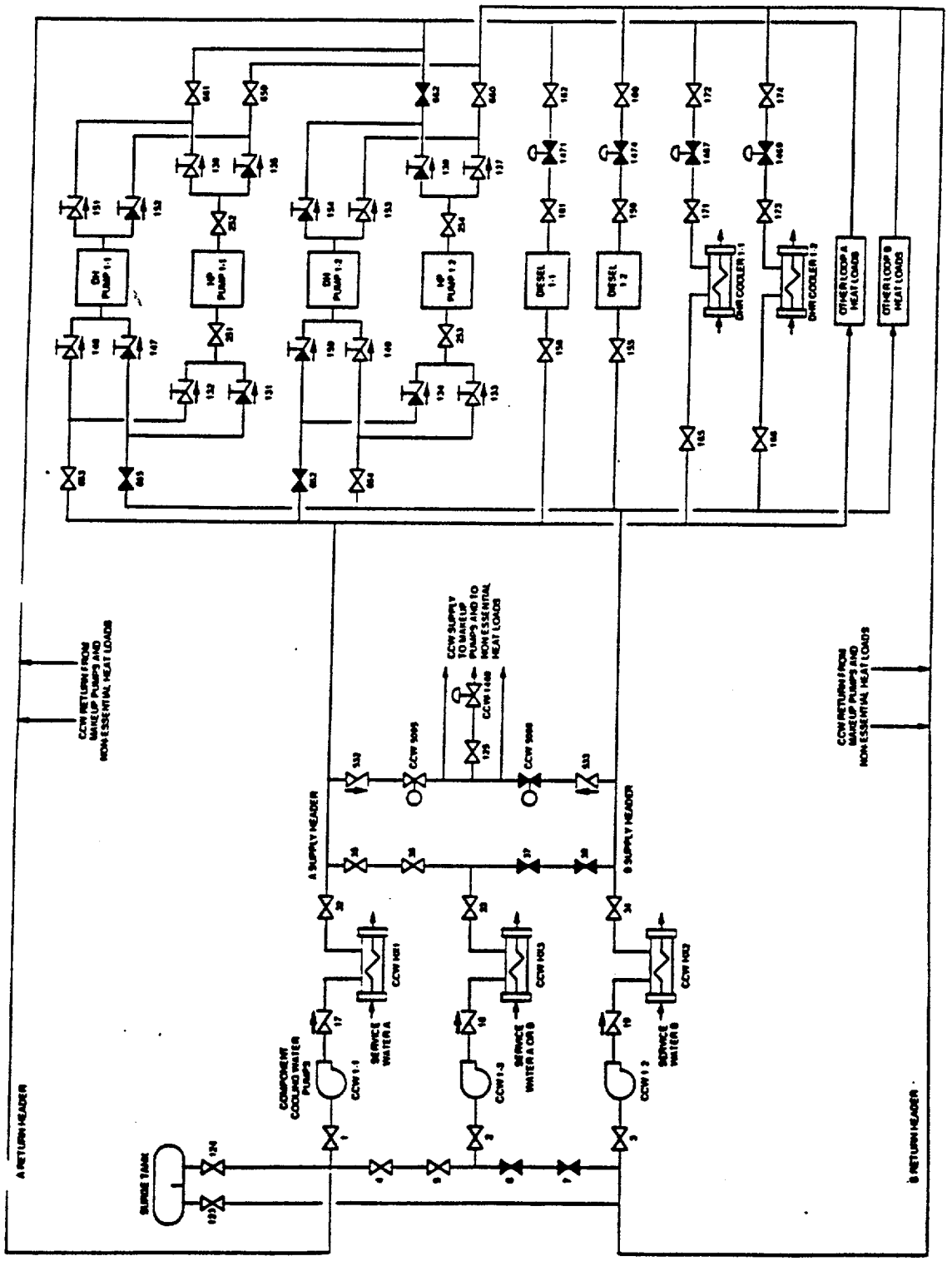

Figure 2. Davis-Besse Component Cooling Water System, Essential Cooling Loops

12/91

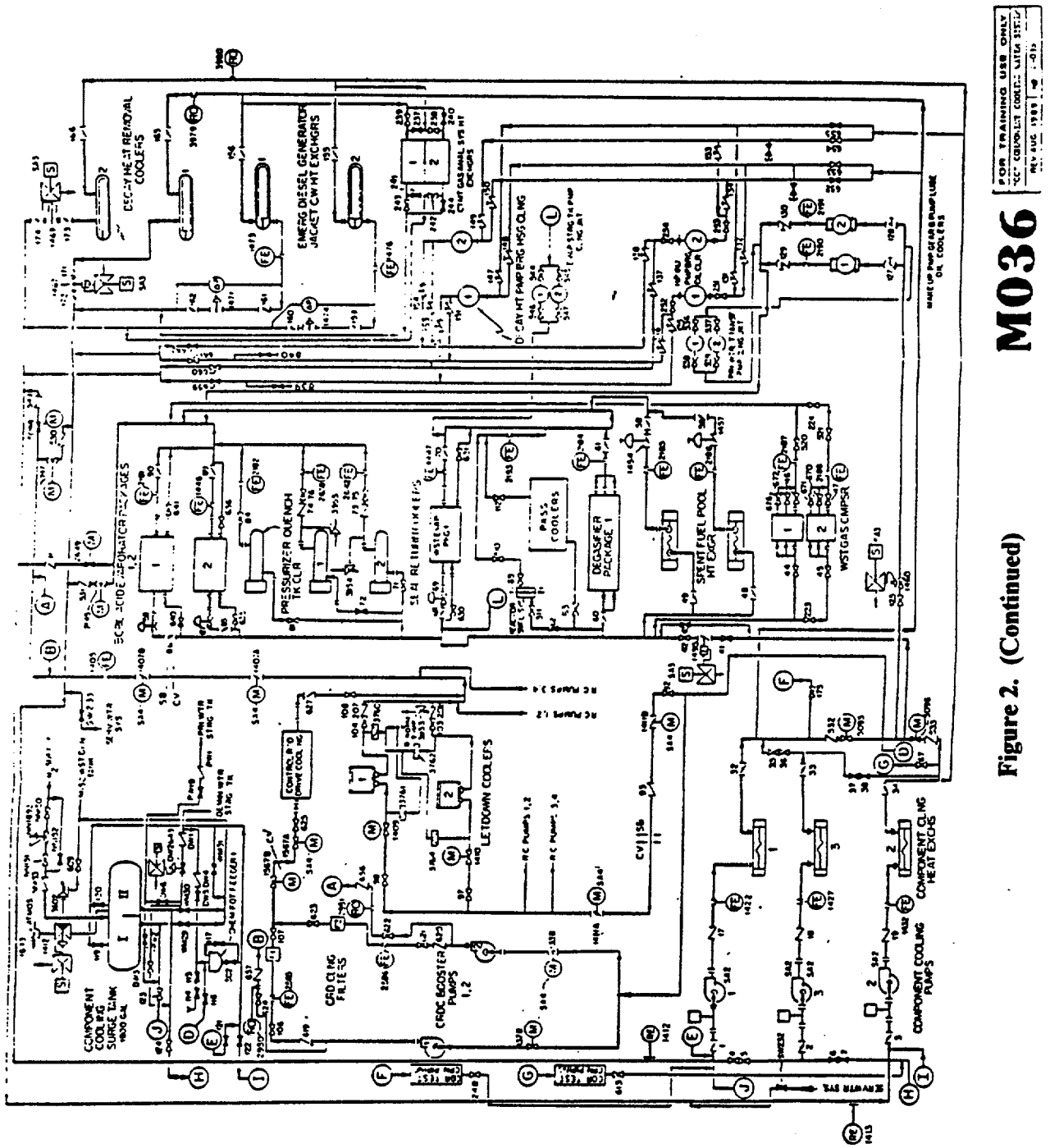

Figure 2. (Continued)

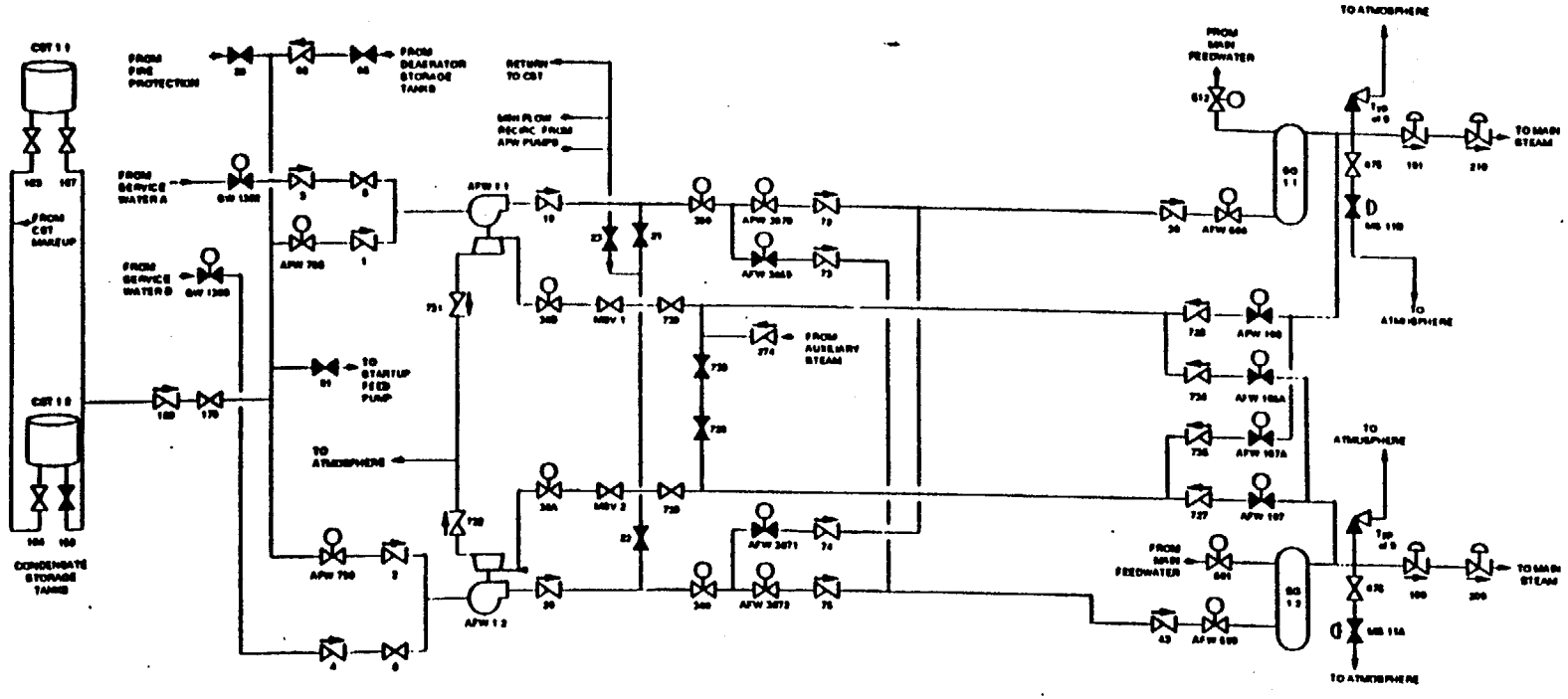

Figure 3. Davis-Besse Auxiliary Feed' 'er and Secondary Steam Relief Systems

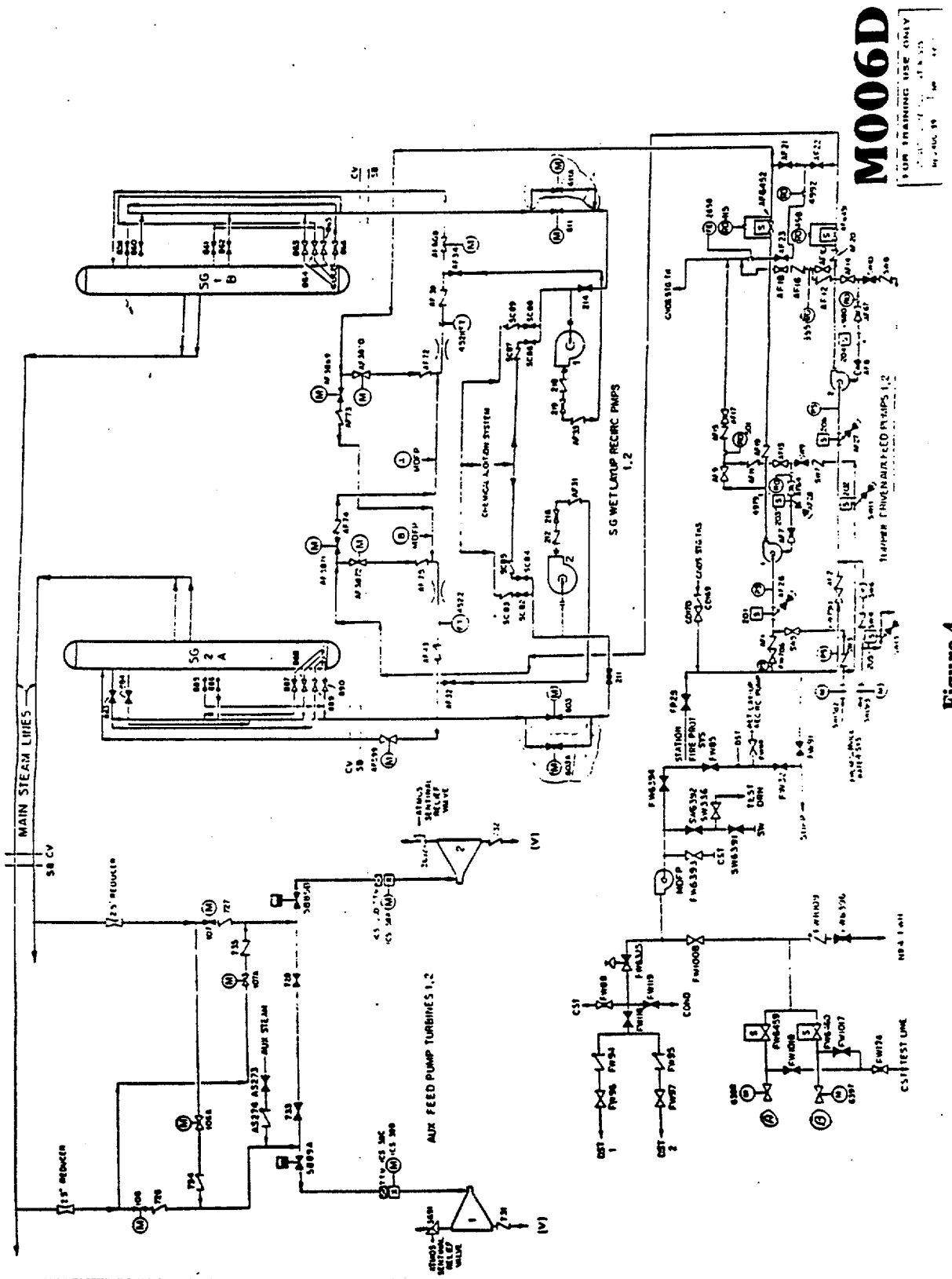
M006D
MAIN STEAM LINES
SG 1 B
SG 2 A
S G WET LAYUP RECIRC PMPS 1,2
AUX FEED PUMP TURBINES 1,2
AUX STEAM
CONDENSATE SYSTEM
STATION FIRE PROT SYS
TEST LINE
COND

Figure 4.

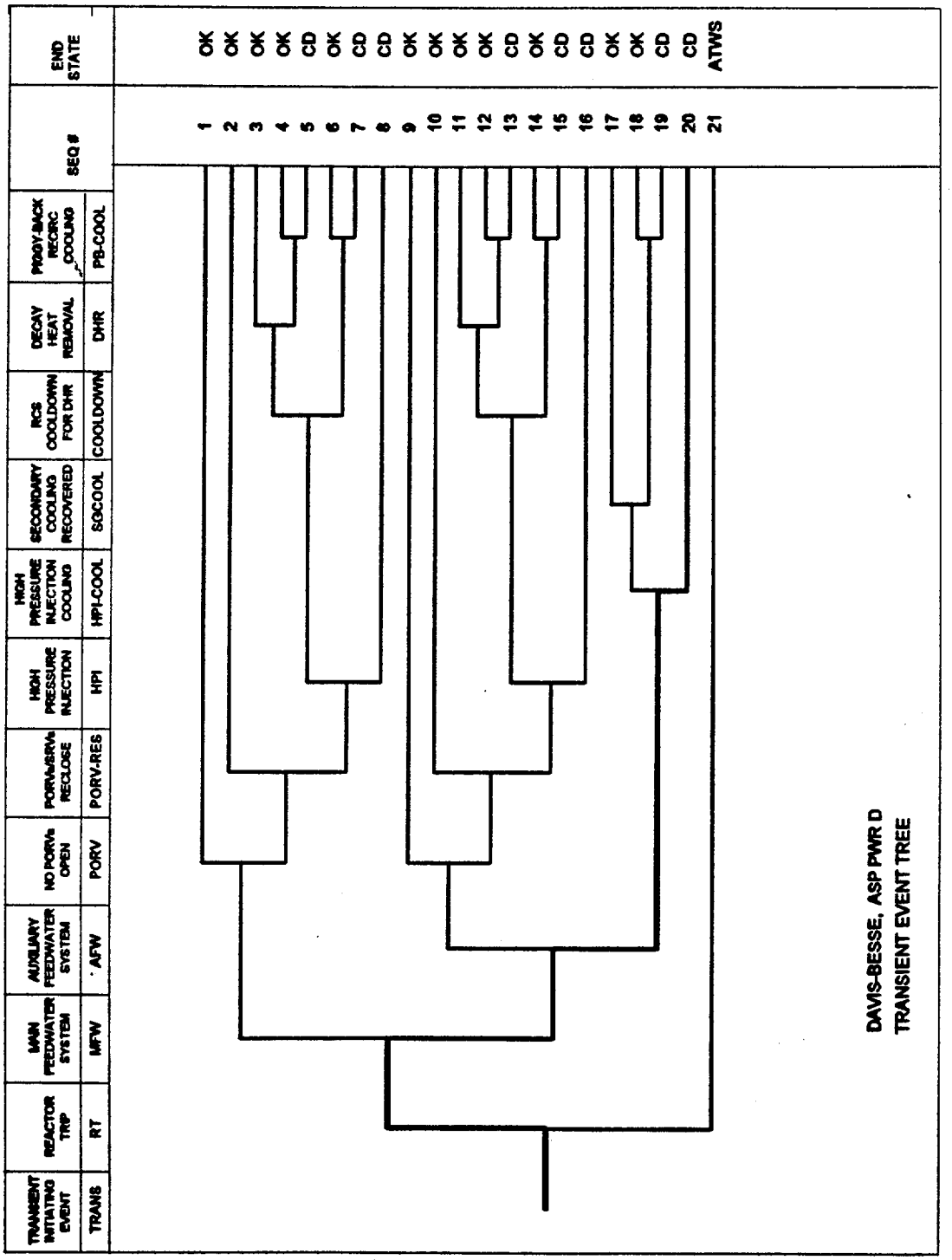

Figure 5. Dominant core damage sequence for LER No. 346/98-011.

Event name	Description	Base probability	Current probability	Type	Modified for this event
IE-LOOP	Initiating Event–LOOP	1.6 E-005	0.0 E+000		No
IE-SGTR	Initiating Event–Steam Generator Tube Rupture	1.6 E-006	0.0 E+000		No
161616IE-SLOCA	Initiating Event–Small Loss-of-Coolant Accident (SLOCA)	2.3 E-006	0.0 E+000		No
IE-TRNS	Initiating Event-General Transient	2.7E-004	6.8E-002		Yes
ACP-BAC-LP-D1	Division B Ac Power 4160v Bus D1 fails	9.0E-005	1.0E+000	TRUE	Yes
ACP-BAC-LP-D2	Division B Ac Power 4160v Bus D2 fails	9.0E-005	1.0E+000	TRUE	Yes
AFW-MDP-FC-SUFP	Startup Feed Pump Fails to Start & Run	3.8E-003	3.8E-003		No
AFW-TDP-CF-ALL	Common Cause Failure of AFW TDP Trains	3.2E-003	3.2E-003		No
AFW-TDP-FC-P11	Turbine-driven AFW Pump Train P11 Failures	3.5E-002	3.5E-002		No
AFW-XHE-XE-SUFP	Operator Fails to Start and Align Startup Feed pump	1.0E-001	1.0E-001	NEW	Yes
CVC-MDP-FC-MU11	Charging MDP Train 1 Failures	3.8E-003	3.8E-003		No
CVC-AOV-OC-DIS	Charging Discharge Path Failures	3.1E-003	3.1E-003		No
CVC-MOV-FC-SUC11	Charging Train Suction Valve MU 6405 Fails	3.0E-003	3.0E-003		No
D2N-RECHARGE	Failure to Recover D2n Charger within 2 hours	2.0E-001	2.0E-001	NEW	Yes
DHR-MDP-FC-P11	DHR Pump Train P11 Failures	4.0E-003	4.0E-003		No
DHR-MOV-FC-DH64	Failure of LPI Train 11 Discharge MOV DH64	3.0E-003	3.0E-003		No
HPI-XHE-XM-HPIC	Operator Fails to Initiate HPI Cooling	1.0E-002	1.0E-002		No
MFW-SYS-UNAVAIL	Main Feedwater SystemUnavailable	2.0E-001	1.0E+000	TRUE	Yes
PPR-SRV-CO-TRAN	PORV/SRVs Open During Transient	8.0E-002	8.0E-002		No
PPR-SRV-CC-PORV	PORV Fails to Open on Demand	6.3E-003	6.3E-003		No
TRANS-20-NREC	Trans Sequence 20 Non-recovery Probability	2.2E-001	2.2E-001		No

Table 2. Sequence Conditional Probabilities for LER No. 346/98-011

Event tree name	Sequence number	Conditional core damage probability (CCDP)	Percent contribution
TRNS	20	1.4E-005	100.0
Total (all sequences)		**1.4E-005**	

Table 3. Sequence Logic for Dominant Sequences for LER No. 346/98-011

Event tree name	Sequence number	Logic
TRNS	20	/RT, MFW-T, AFW, HPI-COOL

Table 4. System Names for LER No. 346/98-011

System name	Logic
AFW	No or Insufficient AFW Flow
HPI-COOL	Failure to Provide HPI Cooling (feed-and-bleed cooling)
MFW-T	Failure of the Main Feedwater System During Transient
RT	Reactor Fails to Trip During Transient

Table 5. Conditional Cut Sets for Higher Probability Sequences for LER No. 346/98-011

Cut set number	Percent contribution	Conditional probability[a]	Cut sets
TRNS Sequence 20		1.4E-005	
1	74.9	1.0E-005	AFW-TDP-FC-P11, D2N-RECHARGE, AFW-XHE-XE-SUFP, MFW-SYS-UNAVAIL, TRANS-20-NREC
2	6.9	9.5E-007	AFW-TDP-CF-ALL, D2N-RECHARGE, AFW-XHE-XE-SUFP, MFW-SYS-UNAVAIL, TRANS-20-NREC
3	3.8	5.2E-007	AFW-TDP-FC-P11, AFW-XHE-XE-SUFP, HPI-XHE-XM-HPIC, MFW-SYS-UNAVAIL, TRANS-20-NREC
4	2.9	3.9E-007	AFW-TDP-FC-P11, D2N-RECHARGE, AFW-MDP-FC-SUFP, MFW-SYS-UNAVAIL, TRANS-20-NREC
5	2.4	3.3E-007	A0FW-TDP-FC-P11, PPR-SRV-CC-PORV, AFW-XHE-XE-SUFP, MFW-SYS-UNAVAIL, TRANS-20-NREC
6	1.5	2.1E-007	AFW-TDP-FC-P11, AFW-XHE-XE-SUFP, DHR-MDP-FC-P11, MFW-SYS-UNAVAIL, TRANS-20-NREC
7	1.4	2.0E-007	AFW-TDP-FC-P11, AFW-XHE-XE-SUFP, CVC-MDP-FC-MU11, MFW-SYS-UNAVAIL, TRANS-20-NREC
8	1.4	1.6E-007	AFW-TDP-FC-P11, AFW-XHE-XE-SUFP, CVC-AOV-OC-DIS, MFW-SYS-UNAVAIL, TRANS-20-NREC
9	1.1	1.6E-007	AFW-TDP-FC-P11, AFW-XHE-XE-SUFP, CVC-MOV-FC-SUC11, MFW-SYS-UNAVAIL, TRANS-20-NREC
10	1.1	1.6E-007	AFW-TDP-FC-P11, AFW-XHE-XE-SUFP, DHR-MOV-CC-DH64, MFW-SYS-UNAVAIL, TRANS-20-NREC
Total (all sequences)		1.4E-005	

[a]The conditional probability for each cut set is determined by multiplying the probability of the initiating event by the probabilities of the basic events in that minimal cut set. The probabilities for the initiating events and the basic events are given in Table 1.

LER No. 346/98-011

Event Description: Manual Reactor Trip due to Component Cooling Water System Leak and De-energizing of Safety-Related Bus D1 and Non-Safety-Related Bus D2

Date of Event: October 14, 1998

Plant: Davis-Besse

Licensee Comments

Reference: Letter from Guy G. Campbell, Vice President - Nuclear, FirstEnergy Nuclear Operating Company, to United States Nuclear Regulatory Commission, "Comments on Preliminary Accident Sequence Precursor Analysis for the October 14, 1998 Operational Event at the Davis-Besse Nuclear Power Station, Unit Number 1," November 9, 1999.

Comment: The licensee commented in the referenced letter that the treatment of reactor coolant pump (RCP) seal loss-of-coolant accident (LOCA) in Scenario 3 of the precursor analysis was inconsistent with the approach taken in the Davis-Besse Probabilistic Safety Assessment (PSA). The PSA assumed, based on the design of the Byron-Jackson RCP seals, that the seals would not suffer catastrophic leakage due to loss of support systems provided the operators tripped the pumps. The Davis-Besse PSA incorporated this conclusion by assuming an RCP seal LOCA would occur only if an affected RCP were not tripped. Because the pumps were tripped upon loss of component cooling water during the October 14, 1998 event, the licensee stated that the analysis should assume that no potential for RCP seal LOCA existed.

Response: The RCP seal model used in the precursor analysis reflects our current understanding of the potential for seal failure given a station blackout for Byron Jackson RCP seals, based on seal performance during historically observed losses of seal cooling with durations greater than 1 h (including the 8 h N9000 loss of seal cooling test referred to in the PSA). The Standardized Plant Analysis Risk (SPAR) model for Davis-Besse used in the ASP Program's analysis recognizes, based on historic data, that there is a potential for an RCP seal failure if seal cooling is not recovered within an hour. As described in Modeling Assumptions, the seals are assumed to fail with probability 0.083 if seal cooling is unavailable for 1.5 h. The impact of the RCP seal failure model on the significance of the October 14, 1998 event is minor; Scenario 3 contributes less than 10% to the overall CCDP.