UNITED STATES
NUCLEAR REGULATORY COMMISSION
WASHINGTON, D.C. 20555-0001

October 29, 1999

MEMORANDUM TO: Jim McKnight, DCD

FROM: Raji Tripathi, CRGR Staff Raji Tripathi

SUBJECT: RELEASE OF CRGR RECORDS TO THE PUBLIC DOCUMENT ROOM

In accordance with the Charter of the Committee to Review Generic Requirements (CRGR), the following CRGR meeting minutes are being released to the PDR to facilitate public access. They are:

1. Minutes, dated November 14, 1995, for CRGR Meeting No. 278, held on October 11, 1995.

2. Minutes, dated August 28, 1995, for CRGR Meeting No. 275, held on June 27, 1995.

3. Minutes, dated April 27, 1995, for CRGR Meeting No. 271, held on April 11, 1995.

4. Minutes, dated December 16, 1994, for CRGR Meeting No. 266, held on December 7, 1994.

5. Minutes, dated August 3, 1994, for CRGR Meeting No. 259, held on July 12, 1994.

6. Minutes, dated September 12, 1994, for CRGR Meeting No. 256, held on April 11, 1994.

If you have any questions or need additional information, please feel free to call me. I can be reached at 415-7584.

Attachments: As stated

cc w/o atts.: J. Murphy, CRGR
C. Rossi, RES
J. Rosenthal, RES

R001

UNITED STATES
NUCLEAR REGULATORY COMMISSION
WASHINGTON, D.C. 20555-0001

November 14, 1995

MEMORANDUM TO: James M. Taylor
Executive Director for Operations

FROM: Edward L. Jordan, Chairman
Committee to Review Generic Requirements

SUBJECT: MINUTES OF CRGR MEETING NUMBER 278

The Committee to Review Generic Requirements (CRGR) met on Wednesday, October 11, 1995 from 8:00 a.m. to 11:00 p.m. A list of attendees is provided in Attachment 1.

G. Holahan (NRR) and R. Elliott (NRR) presented for CRGR review and endorsement the proposed urgent bulletin titled "Unexpected Clogging of Residual Heat Removal (RHR) Pump Strainer While Operating in Suppression Pool Cooling Mode." This bulletin addresses the issue of ECCS operability in light of the September 11th event involving emergency core cooling system suction strainer clogging at Limerick 1.

This expedited bulletin is a parallel effort with a proposed bulletin, now published for public comment, which dealt with the potential for suction strainers of the ECCS pumps in BWRs to become clogged by debris generated following a loss-of-coolant accident (approved by the CRGR during the Committee's 275th meeting).

Attachment 2 provides additional details on the October 11, 1995 CRGR meeting.

CRGR supported the issuance of the proposed urgent bulletin subject to several modifications and various other comments. Specifically,

1. The heightened urgency of the bulletin needs to be articulated. Instead of waiting until the next refueling outage, the Committee recommended that the licensees be asked to ensure suppression pool cleanliness within 90 days and demonstrate the operability of the ECCS pumps.

2. Although no risk implications were quantified and submitted to CRGR, in response to a Committee inquiry, NRR indicated that this issue is considered to be risk significant with perhaps a conditional core damage probability between 10^{-3} and 10^{-4} per reactor-year; one CRGR member believed that the risk could be between 10^{-4} to 10^{-5}. Some idea of risk importance is essential to the recommendation for allowable times to take remedial actions. It also affects, ultimately, the frequency for pool cleaning and pump operability demonstrations.

3. The bulletin should focus on BWRs only and should clearly identify the ECCS pumps for which the strainer clogging concerns are applicable and, perhaps, should include other systems which take suction from the suppression pool.

UNITED STATES
NUCLEAR REGULATORY COMMISSION
WASHINGTON, D.C. 20555-0001

November 15, 1995

MEMORANDUM TO: James M. Taylor
Executive Director for Operations

FROM: Edward L. Jordan, Chairman
Committee to Review Generic Requirements

SUBJECT: MINUTES OF CRGR MEETING NUMBER 278

The Committee to Review Generic Requirements (CRGR) met on Wednesday, October 11, 1995 from 8:00 a.m. to 11:00 a.m. A list of attendees is provided in Attachment 1.

G. Holahan (NRR) and R. Elliott (NRR) presented for CRGR review and endorsement the proposed urgent bulletin titled "Unexpected Clogging of Residual Heat Removal (RHR) Pump Strainer While Operating in Suppression Pool Cooling Mode." This bulletin addresses the issue of ECCS operability in light of the September 11th event involving emergency core cooling system suction strainer clogging at Limerick 1.

This expedited bulletin is a parallel effort with a proposed bulletin, now published for public comment, which dealt with the potential for suction strainers of the ECCS pumps in BWRs to become clogged by debris generated following a loss-of-coolant accident (approved by the CRGR during the Committee's 275th meeting).

Attachment 2 provides additional details on the October 11, 1995 CRGR meeting.

CRGR supported the issuance of the proposed urgent bulletin subject to several modifications and various other comments. Specifically,

1. The heightened urgency of the bulletin needs to be articulated. Instead of waiting until the next refueling outage, the Committee recommended that the licensees be asked to ensure suppression pool cleanliness within 90 days and demonstrate the operability of the ECCS pumps.

2. Although no risk implications were quantified and submitted to CRGR, in response to a Committee inquiry, NRR indicated that this issue is considered to be risk significant with perhaps a conditional core damage probability between 10^{-3} and 10^{-4} per reactor-year; one CRGR member believed that the risk could be between 10^{-4} to 10^{-5}. Some idea of risk importance is essential to the recommendation for allowable times to take remedial actions. It also affects, ultimately, the frequency for pool cleaning and pump operability demonstrations.

3. The bulletin should focus on BWRs only and should clearly identify the ECCS pumps for which the strainer clogging concerns are applicable and, perhaps, should include other systems which take suction from the suppression pool.

4. The licensees need to establish long-term performance measures to demonstrate the cleanliness of the suppression pool, and implement a program to ensure operability of pumps taking suction from the suppression pool. Since the suppression pool cleanliness plays an important (perhaps dominant) role in the reliability of these pumping systems, the Maintenance Rule should include the scope and frequency of suppression pool inspection and cleaning. This is not a condition for the proposed bulletin, but it is an observation by CRGR for consideration by NRR at an appropriate time.

5. The staff should wait until the licensee responses on this urgent bulletin are received and evaluated, and incorporate them, as appropriate, prior to issuing the proposed bulletin on post-LOCA clogging of the ECCS pump strainers (approved by CRGR during the 275th meeting).

6. The Committee expressed concern about the lack of effectiveness of the process for dissemination of generic safety information, and inadequate utility efforts in analyzing and evaluating the pertinent operational experience. In the recent years, there have been several generic communications from NRC, INPO, and the BWR Owners' Group on the subject of debris blockage at the U.S. reactors, and also from a foreign reactor. However, the utilities are apparently focusing too narrowly on the specific problems and prescriptive measures discussed in such generic communications, and not considering broadly enough the applicability of the disseminated safety information to their plants. CRGR believes that this matter warrants further management attention.

Attachment 2 includes the modified urgent bulletin incorporating the CRGR comments.

In accordance with the EDO's July 18, 1983 directive concerning "Feedback and Closure of CRGR Review," a written response is required from the cognizant office to report agreement or disagreement with the CRGR recommendations in these minutes. The response is to be forwarded to the CRGR Chairman and if there is disagreement with the CRGR recommendations, to the EDO for decision making.

Questions concerning these meeting minutes should be referred to Raji Tripathi (415-7584).

Attachments: As stated

cc: Next page

cc: Commission (2)
SECY
J. Lieberman, OE
P. Norry, ADM
L. Norton, OIG
K. Cyr, OGC
J. Larkins, ACRS
Office Directors
Regional Administrators, RI/RII/RIII/RIV
CRGR Members
E. W. Brach
G. Holahan

Attachment 1 to the Minutes of CRGR Meeting No. 278

Attendance List

October 11, 1995

CRGR Members

D. Ross for E. Jordan
E. Brach for M. Knapp
J. Murphy
J. Rutberg
E. Merschoff

CRGR Staff

R. Tripathi
J. Conran

NRC Staff

G. Holahan
C. Berlinger
R. Elliott
J. Rosenthal
T. J. Carter
A. Serkiz
M. Marshall

Attachment 2 to the Minutes of the CRGR Meeting No. 278
Proposed Bulletin, "Unexpected Clogging of Residual Heat Removal (RHR) Pump Strainer While Operating in Suppression Pool Cooling Mode"

(CRGR Meeting No. 278 - October 11, 1995)

TOPIC

The proposed bulletin addresses the issue of emergency core cooling system operability in light of the recent emergency core cooling system (ECCS) suction strainer clogging event at Limerick. This bulletin requests the BWR licensees to evaluate the operability of their ECCS from the perspective of cleanliness of their suppression pools and suction strainers, and effectiveness of the foreign material exclusion (FME) practices. It also requests the licensees to clean their suppression pools as soon as practical, and as a preventive measure, to establish a program for cleaning the suppression pool that includes the criteria for establishing appropriate cleaning frequency, and criteria for determining adequacy of the pool cleanliness. In the bulletin, as proposed, the licensees of both the BWRs and PWRs were requested to review their FME practices and to take corrective action on any weaknesses identified. Licensees have 30 days from the date of the bulletin to submit a report stating whether and to what extent they have complied with the requested actions.

This expedited bulletin is a parallel effort with another bulletin which deals with the potential for suppression pool suction strainers of the ECCS in BWRs to become clogged by debris generated following a loss-of-coolant accident (LOCA). In June 1995, during the 275th CRGR meeting, the Committee reviewed the earlier bulletin (and the proposed revision to the accompanying Regulatory Guide 1.82, "Water Sources for Long-term Cooling Following a Loss-of-Coolant Accident," which specifically addresses the aspects of ensuring long-term cooling that are unique to BWRs) and endorsed it for publication for public comments. Subsequently, the staff held a Public Meeting on that subject.

BACKGROUND

(i) Memorandum dated nil, from Frank J. Miraglia to Edward L. Jordan, "Request for Expedited Review and Endorsement of the Proposed Urgent Bulletin titled, 'Unexpected Clogging of Residual Heat removal (RHR) Pump Strainer While Operating in Suppression Pool Cooling Mode.'" The attachments are as follows:

1. Draft Proposed Urgent Bulletin titled, "Unexpected Clogging of Residual Heat removal (RHR) Pump Strainer While Operating in Suppression Pool Cooling Mode."

2. CRGR Review Package

(ii) E-mail from Raji Tripathi to the CRGR members, dated October 5, 1995, confirming electronic and/or hard copy transmittal to the members of the following documents:

(a) BWR Owners' Group correspondence (from BWROG Executive Oversight Committee to BWR Owners' Group Executive Committee) on

"Recommended Utility Interim Actions in Response to the Recent ECCS Suction Strainer Plugging Event at Limerick 1," dated September 29, 1995.

(b) Preliminary Notification on the September 11th Limerick event

(c) As-published proposed bulletin on "Potential Plugging of Emergency Core Cooling Suction Strainers by Debris in Boiling Water Reactors," and the proposed Revision 2 to the accompanying Regulatory Guide 1.82, "Water Resources for Long-Term Recirculation Cooling Following a Loss-of-Coolant Accident."

(d) Information Notice 95-47, "Unexpected Opening of a Safety/Relief Valve and Complications Involving Suppression Pool Cooling Strainer Blockage," dated October 4, 1995.

ISSUES/QUESTIONS

CRGR supported the issuance of the proposed urgent bulletin subject to several modifications and various other comments. Attachment 2-A contains the red-line/strike out version of the revised bulletin addressing the Committee's comments.

The Committee specifically expressed concerns and raised questions in the following areas: (1) urgency of the proposed bulletin; (2) whether or not the staff had quantitatively examined this issue from risk perspective; (3) relevance to PWRs; (4) the importance of suppression pool cleanliness with respect to the reliability of various systems taking suction from it; (5) overlap, if any, between the recommended actions under this urgent bulletin and the proposed bulletin on post-LOCA strainer clogging (endorsed by CRGR during the 275th Meeting in June 1995, and currently out for public comment); (6) lack of effectiveness of relevant generic communications from the NRC, INPO and the Owners' Group disseminating safety information, and inadequate licensee response in implementing lessons learned.

BACKFIT CONSIDERATIONS

This proposed action is proposed as a backfit under the compliance exception of 10 CFR 50.109.

Attachment 2-A
OMB No. 3150-0012~~1~~
NRCB 95-02

UNITED STATES
NUCLEAR REGULATORY COMMISSION
OFFICE OF NUCLEAR REACTOR REGULATION
WASHINGTON, D.C. 20555-0001

October 11, 1995

NRC BULLETIN 95-02: UNEXPECTED CLOGGING OF A RESIDUAL HEAT REMOVAL (RHR) PUMP STRAINER WHILE OPERATING IN SUPPRESSION POOL COOLING MODE

Addressees

All holders of boiling-water reactor (BWR) operating licenses or construction permits for nuclear power reactors.

Purpose

The U.S. Nuclear Regulatory Commission (NRC) is issuing this bulletin to accomplish the following:

(1) Alert addressees to complications experienced during a recent event in which a licensee initiated suppression pool cooling in response to a stuck-open safety relief valve (SRV) and subsequently experienced clogging of one RHR pump suction strainer.

(2) Request ~~boiling-water reactor (BWR)~~ addressees to review the operability of their emergency core cooling system (ECCS) and other pumps which draw suction from the suppression pool while performing their safety function. The addressee's evaluation should be based on ~~the cleanliness of their~~ suppression pool cleanliness, ~~and~~ suction strainer~~s~~ cleanliness, and the effectiveness of their foreign material exclusion (FME) practices~~,~~. ~~and~~ In addition, addressees are requested to implement appropriate procedural modifications and other actions (e.g., suppression pool cleaning), as necessary, to minimize foreign material in the suppression pool, drywell and containment. Addressees are requested to verify their operability evaluation through appropriate testing and inspection. ~~In addition, pressurized water reactor (PWR) addressees are requested to review the effectiveness of their FME practices related to containment cleanliness and to take corrective action on any weaknesses noted.~~

(3) Require that addressees report to the NRC whether and to what extent they have complied with the requested actions. In addition, require a second report indicating completion of confirmatory test(s) and inspection(s) and providing the test results by addressees that have complied with the requested actions, or indicating completion of any proposed alternative course of action by addressees that have not complied with the requested actions.

9510040059

Background

On September 11, 1995, Limerick Unit 1 was being operated at 100 percent power when control room personnel observed alarms and other indications that one safety relief valve ("M") was open. Emergency procedures were implemented. Attempts to close the valve were unsuccessful, and within 2 minutes a manual reactor scram was initiated. The main steam isolation valves were closed to reduce the cooldown rate of the reactor vessel. The maximum cooldown rate was 54° C/hr [130° F/hr].

Prior to the opening of the SRV, the licensee was running the "A" loop of suppression pool cooling to remove heat being released into the pool by leaking SRVs. Shortly after the manual scram, and with the SRV still open, the "B" loop of suppression pool cooling was started. Operators continued working to close the SRV and reduce the cooldown of the reactor vessel. Approximately 30 minutes later, fluctuating motor current and flow was observed on the "A" loop. Cavitation was believed to be the cause, and the loop was secured. After it was checked the "A" pump was restarted~~—~~, but at ~~only~~a reduced flowrate of 8kl/m [2,000 gpm]~~, a fraction of the original flow~~. No problems were observed, so the flow rate was gradually increased back to 32kl/m [8,500 gpm], the full flowrate for the RHR pumps when operating in suppression pool cooling mode. Again, no problems were observed, so the pump continued to be operated at a constant flow. A pressure gauge located on the pump suction was observed to have a gradually lower reading, which was believed to be indicative of an increased pressure drop across the pump suction strainers located in the suppression pool. After about 30 minutes of additional operation, the suction pressure remained constant.

The rest of the reactor shutdown was routine, with no further complications.

Discussion

Limerick Unit 1 has been in commercial operation since 1986 without its suppression pool ever being cleaned. Cleaning was scheduled for the upcoming 1996 refueling outage. The pool of Unit 2 was cleaned during the last refueling outage in 1995.

At Limerick, each pump suction inlet is constructed in a "T" arrangement with two truncated cone-type strainers. The strainers are constructed of 0.95 cm [3/8 inch] thick perforated 304L stainless steel plate with 1.6 cm [5/8 inch] holes on 2.2 cm [7/8 inch] centers. All strainer surfaces are covered by a 12x12 316-L stainless steel wire mesh. Because of the leaking SRVs, the "A" and "B" loops of RHR had typically been used for suppression pool cooling during the last few months before the event. Originally, the licensee only used the "A" loop for suppression pool cooling. Approximately 3 months before the event, the licensee changed its practice so that use of the "A" and "B" loops could be alternated.

After cooldown following the blowdown event, a diver was sent into the suppression pool at Unit 1 to inspect the condition of the strainers and the general cleanliness of the pool. Both suction strainers in the "A" loop of

suppression pool cooling were found to be almost entirely covered with a thin "mat" of material, consisting mostly of fibers and sludge. The "B" loop suction strainers had a similar covering, but to a lesser extent. One of the "B" loop suction strainers was approximately 75% covered by the mat. The other had only limited coverage. The other strainers in the pool were covered with a dusting of corrosion products (sludge). Debris was subsequently removed from the strainers and the suppression pool floor, and the water was cleaned by use of a temporary filtration system. The strainers were easily cleaned by brushing the material off the surface.

It is believed that during operation of the suppression pool cooling system, the strainer filtered out fibers that were in the pool water. The resulting mat of fibers improved the filtering action of the strainers, thereby collecting sludge and other material on the surface of the strainer. ~~Whether~~The licensee has concluded that the blowdown caused by the SRV opening did not significantly increase~~d~~ the rate of debris accumulation on the strainer~~ is not known~~. ~~I~~Following the event, the licensee removed about 635kg [1400 pounds] of debris from the pool of Unit 1. A similar amount of material had previously been removed from the Unit 2 pool.

Analysis showed that the sludge was primarily iron oxides and the fibers were of a polymeric nature. The source of the fibers has not been positively identified, but the licensee has determined that the fibers did not originate within the suppression pool. There was no trace of either fiberglass or asbestos fibers. In addition, other foreign material was found in the pool, such as pieces of wood, nails, and hose. In light of these findings, the licensee decided to modify their FME procedures to specifically address material control in the suppression pool and drywell.

Section 50.46 of Title 10 of the *Code of Federal Regulations* (10 CFR 50.46) requires that licensees design their ECCSs so that the calculated cooling performance following a loss-of-coolant accident (LOCA) meets five criteria, one of which is to provide long-term cooling capability of sufficient duration following a successful system initiation so that the core temperature shall be maintained at an acceptably low value and decay heat shall be removed for the extended period of time required by the long-lived radioactivity remaining in the core. The ECCS is designed to meet this criterion, assuming the worst single active failure and only partially obstructed flow through the strainer. Experience gained from the Limerick event demonstrates that inadequate suppression pool cleanliness can lead to unacceptable buildup of foreign material, debris and corrosion products on the strainers during normal operation, which could prevent the ECCS from providing long-term cooling following a LOCA. The staff concludes, therefore, that licensees should take the actions discussed below to ensure that debris which is located in the suppression pool, or will accumulate in the suppression pool during normal operation, does not adversely impact ECCS capability during normal or transient operations or following a LOCA.

Prior to the Limerick event, the staff had issued a draft bulletin for public comment entitled, "Potential Plugging of Emergency Core Cooling Suction Strainers by Debris in Boiling Water Reactors." The draft bulletin and

associated draft regulatory guide provide the staff's proposed resolution to the generic BWR strainer clogging issue. The issue covered by the draft bulletin, however, differs from the issue covered in this bulletin because the ~~staff efforts prior to the Limerick event have dealt with~~draft bulletin focuses on the potential for ECCS strainers to be clogged by debris generated by a LOCA. This bulletin has been issued to resolve a related issue, highlighted by the Limerick event, of the potential for ECCS suction strainers to be clogged during normal operations by debris which is presently in the suppression pool, or may accumulate in the suppression pool during normal operation. The draft bulletin was published in the *Federal Register* on July 31, 1995. The public comment period ended on October 2, 1995. The staff is currently involved in the review and disposition of the public comments as well as in resolving the open issues identified in the federal register notice.

Requested Actions

To ensure that unacceptable buildup of debris that could clog strainers does not occur during normal operation, all ~~boiling water reactor (BWR) licensees~~addressees are requested to take the following actions:

1) ~~Evaluate~~Verify the operability of ~~the ECCS~~all pumps which draw suction from the suppression pool when performing their safety functions (e.g., ECCS, containment spray, etc.), ~~and the suppression pool on the basis of the cleanliness conditions of the~~based on an evaluation of suppression pool and ~~of~~ suction strainer ~~surfaces~~cleanliness conditions. This evaluation should be based on the pool and strainer conditions during the last inspection or cleaning and an assessment of the potential for the introduction of ~~additional~~ debris or other materials that could clog the strainers since the pool was last cleaned. In addition, this evaluation should be confirmed through appropriate test(s) and strainer inspection(s) within 90 days of the licensee's initial response to this bulletin described under "Required Response" below.

2) Schedule a suppression pool cleaning~~ as soon as practical, but no later than the next refueling outage~~. The schedule for cleaning the pool should be consistent with the findings in requested action 1 above. In addition, a program for cleaning the suppression pool should be established, including procedures for the cleaning of the pool, criteria for determining the appropriate cleaning frequency, and criteria for evaluating the adequacy of the pool cleanliness.

3) Review FME procedures and their implementation to determine whether adequate control of materials in the drywell, suppression pool, and systems that interface with the suppression pool exists. This review should determine if comprehensive FME controls have been established to prevent materials that could potentially impact ECCS operation from being introduced into the suppression pool, and that workers are sufficiently aware of their responsibilities regarding FME. Any identified weaknesses should be corrected. In addition, the

effectiveness of the FME controls since the last time the suppression pool was cleaned and the ECCS strainers inspected, and the impact that any weaknesses noted may have on the operability of the ECCS should be assessed.

4) Consider additional measures such as suppression pool water ~~chemistry~~ sampling and trending of pump suction pressure to detect clogging of ECCS suction strainers.

By letter dated September 29, 1995, (serial BWROG-95083), the BWR Owners Group (BWROG) Executive Oversight Committee (EOC) provided to the BWROG Executive Committee their recommended utility interim actions in response to the recent ECCS suction strainer plugging event at Limerick, Unit 1. The guidance contained in the letter is consistent with the requested actions in this bulletin. The letter also provides additional guidance on the BWROG recommended method for evaluating pool cleanliness and on demonstrating adequate pool cleanliness.

~~To minimize the potential for clogging of ECCS sumps in pressurized water reactors (PWRs) by foreign material, PWR licensees are requested to review FME procedures and their implementation to determine whether adequate control of materials in the containment and systems that interface with the containment exists. In addition, PWR licensees are requested to ensure that comprehensive FME controls have been established to prevent materials that could potentially impact ECCS operation from being introduced into the containment and the ECCS sumps, and that workers are sufficiently aware of their responsibilities regarding FME. Any identified weaknesses should be corrected.~~

Required Response

All addressees are required to submit the following written reports:

(1) Within 30 days of the date of this bulletin, a report indicating whether and to what extent the licensee has complied with the requested actions in this bulletin. If a licensee has complied with these actions, its report should provide a detailed description of its actions, the results of its evaluations, ~~and~~ any corrective actions it has taken, and a description of the licensee's planned test(s) and inspection(s) for confirming their operability evaluation. In addition, ~~BWR~~ licensees should include their schedules for pool cleaning, the supporting basis for the cleaning schedule, and a summary of any additional measures taken to detect and prevent clogging of the ECCS strainers. If a licensee has ~~does~~ not complied with these requested actions, its reportshould contain a detailed description of any proposed alternative course of action, its schedule for completing this alternative course of action, and the safety basis for its having determined the acceptability of the planned alternative course of action.

(2) Within 10 days of the completion of confirmatory tests and inspections or completion of proposed alternative actions, a second report confirming the completion of all pump operability testing and inspection and providing a description of the test/inspection results by licensees

who have complied with the requested actions, or indicating completion of alternative courses of action by licensees that have not complied with the requested actions.

Address the required written reports to the U.S. Nuclear Regulatory Commission, ATTN: Document Control Desk, Washington, D.C. 20555-0001, under oath or affirmation under the provisions of Section 182a, the Atomic Energy Act of 1954, as amended, and 10 CFR 50.54(f). In addition, submit a copy of the reports to the appropriate regional administrator.

Related Generic Communications

Recent instances of problems with strainer clogging are described in the following generic communications:

- NRC Information Notice 95-47: "Unexpected Opening of a Safety/Relief Valve and Complications Involving Suppression Pool Cooling Strainer Blockage"
- NRC Information Notice 95-06: "Potential Blockage of Safety-Related Strainers by Material Brought Inside Containment"
- NRC Information Notice 93-34 and Supplement 1: "Potential for Loss of Emergency Core Cooling Function due to a Combination of Operational and Post-LOCA Debris in Containment"
- NRC Bulletin 93-02 and Supplement 1: "Debris Plugging of Emergency Core Cooling Suction Strainers"
- NRC Information Notice 92-85: "Potential Failures of Emergency Core Cooling Systems caused by Foreign Material Blockage"
- NRC Information Notice 92-71: "Partial Plugging of Suppression Pool Strainers at a Foreign BWR"

Backfit Discussion

The actions requested by this bulletin, if required, would be backfits in accordance with NRC procedures and are necessary to ensure that licensees are in compliance with existing NRC rules and regulations. Specifically, 10 CFR 50.46 requires that the ECCS be designed so that it is calculated to provide adequate flow capability to maintain the core temperature at an acceptably low value and to remove decay heat for the extended period of time required by the long-lived radioactivity remaining in the core following a LOCA. The Limerick event has demonstrated that suppression pool cleanliness can adversely impact ECCS performance and could prevent the ECCS from performing its safety function of long-term decay heat removal following a LOCA. Therefore, this bulletin is being issued as if the requested actions were compliance backfits under the terms of 10 CFR 50.109(a)(4)(i). A full backfit analysis was not performed. An evaluation was performed in accordance

with NRC procedures. A statement of the objectives of and the reasons for the requested actions and the basis for invoking the compliance exception if the requested actions were to be required, has been included. A copy of this evaluation will be made available in the NRC Public Document Room.

Paperwork Reduction Act Statement

This Bulletin contains information collections that are subject to the Paperwork Reduction Act of 1995 (44 U.S.C. 3501 et seq.). These information collections were approved by the Office of Management and Budget, approval number 3150-0012~~1~~, which expires Ju~~ne 30~~ly 31, 1997.

The public reporting burden for this collection of information is estimated to average 240 hours per response, including the time for reviewing instructions, searching existing date sources, gathering and maintaining the data needed, and completing and reviewing the collection of information. The U.S. Nuclear Regulatory Commission is seeking public comment on the potential impact of the collection of information contained in the (Bulletin, etc.) and on the following issues:

1. Is the proposed collection of information necessary for the proper performance of the functions of the NRC, including whether the information will have practical utility?

2. Is the estimate of burden accurate?

3. Is there a way to enhance the quality, utility, and clarity of the information to be collected?

4. How can the burden of the collection of information be minimized, including the use of automated collection techniques?

Send comments on any aspect of this collection of information, including suggestions for reducing the burden, to the Information and Records Management Branch (T-6 F33), U.S. Nuclear Regulatory Commission, Washington, DC 10555-0001, and to the Desk Officer, Office of Information and Regulatory Affairs, NEOB-10202, (3150-0012), Office of Management and Budget, Washington, DC 20503.

The NRC may not conduct or sponsor, and a person is not required to respond to, a collection of information unless it displays a currently valid OMB control number.

If you have any questions about this matter, please contact the technical contact listed below or the appropriate Office of Nuclear Reactor Regulation (NRR) project manager.

Dennis M. Crutchfield, Director
Division of Reactor Program Management
Office of Nuclear Reactor Regulation

Technical contact: Robert Elliott, NRR
(301) 415-1397

Lead project manager: Robert M. Latta, NRR
(301) 415-1314

Attachment:
List of Recently Issued NRC Bulletins

Questions concerning these meeting minutes should be referred to Raji Tripathi (415-7584).

Attachments: As stated

cc: Commission (5)
SECY
J. Lieberman, OE
P. Norry, ADM
H. Bell, OIG
K. Cyr, OGC
J. Larkins, ACRS
Office Directors
Regional Administrators, RI/RII/RIII/RIV
CRGR Members
E. W. Brach
A. Thadani

Distribution of CRGR Minutes 293

Central File w/att.	PDR (NRC/CRGR) w/o att.
CRGR SF	CRGR CF
S. Treby	J. Milhoan
L. Soffer	J. Conran
R. Tripathi	G. Holahan
R. Jones	E. Weiss
L. Kopp	C. Grimes
C. Miller	T. Collins
C. Grattow	B. Wetzel
B. Zalcman	J. Wilson
A. Huffert	J. Schaperow
J. Lee	D. Nolan

DOCUMENT NAME:S:\CRGR\MINUTES.293

To receive a copy of this document, indicate in the box: "C" = Copy without enclosures "E" = Copy with enclosures "N" = No copy

OFFICE	CRGR		DD:AEOD		C\CRGR:AEOD				
NAME	RTripathi		DRoss		ELJordan				
DATE	11/ /96		11/ /96		11/ /96				

OFFICIAL RECORD COPY

August 28, 1995

MEMORANDUM TO: James M. Taylor
Executive Director for Operations

FROM: Edward L. Jordan, Chairman
Committee to Review Generic Requirements

Original Signed
E. L. Jordan

SUBJECT: MINUTES OF CRGR MEETING NUMBER 275

The Committee to Review Generic Requirements (CRGR) met on Tuesday, June 27, 1995 from 8:00 a.m. to 12:00 p.m. A list of attendees is provided in Attachment 1. The following item was discussed at the meeting:

1. M. Virgilio (NRR) and R. Elliott (NRR) presented for CRGR review and endorsement the proposed bulletin, "Potential Plugging of Emergency Core Cooling Suction by Debris in Boiling Water Reactors." This proposed action would request the licensees to implement appropriate procedural changes and plant modifications. L. Shao (RES), M. Marshall (RES) and Al Serkiz (RES) presented the companion guidance document - proposed revision 2 of the Regulatory Guide 1.82, "Water Sources for Long-Term Recirculation Cooling Following a Loss-of-Coolant Accident." This draft revision to the regulatory guide addresses the aspects of ensuring long-term cooling which are unique to BWRs, and it also provides additional technical guidance to the BWR licensees on conducting evaluations to ensure compliance with the ECCS rule. Subject to various comments, the Committee endorsed the two generic actions for publication in the *Federal Register* for public comments. This matter is discussed in Attachment 2.

In accordance with the EDO's July 18, 1983 directive concerning "Feedback and Closure of CRGR Review," a written response is required from the cognizant office to report agreement or disagreement with the CRGR recommendations in these minutes. The response is to be forwarded to the CRGR Chairman and if there is disagreement with the CRGR recommendations, to the EDO for decision making.

Questions concerning these meeting minutes should be referred to Raji Tripathi (415-7584).

Attachments: As stated

cc: Next page

Distribution: See next page

DOCUMENT NAME:S:\CRGR\FMINUTES.275

To receive a copy of this document, indicate in the box: "C" = Copy without enclosures "E" = Copy with enclosures "N" = No copy

OFFICE	CRGR	C	DD:AEOD	C	D:CRGR:AEOD					
NAME	RTripathi		DFRoss		ELJordan					
DATE	08/25/95		08/[illegible]/95		08/28/95					

OFFICIAL RECORD COPY

cc: Commission (2)
SECY
J. Lieberman, OE
P. Norry, ADM
D. Williams, OIG
K. Cyr, OGC
J. Larkins, ACRS
Office Directors
Regional Administrators, RI/RII/RIII/RIV
CRGR Members
A. Gibson

Distribution of CRGR Minutes 275
Central File w/att.
PDR (NRC/CRGR) w/o att.
CRGR SF
CRGR CF
S. Treby
J. Milhoan
M. Taylor
J. Conran
R. Tripathi
G. Holahan
M. Virgilio
L. Shao
C. Berlinger
R. Barrett
R. Lobel
R. Elliott
M. Marshall
A. Serkiz
A. Kugler
J. Shapaker
R. Lobel
C. Serpan
D. Coe

Attachment 1 to the Minutes of CRGR Meeting No. 275

Attendance List

June 27, 1995

CRGR Members

E. Jordan
F. Miraglia
M. Knapp
J. Murphy
J. Rutberg
A. Gibson (for Ellis Merschoff)

CRGR Staff

R. Tripathi
J. Conran

NRC Staff

L. Shao
M. Virgilio
R. Barrett
C. Berlinger
R. Elliott
A. Serkiz
M. Marshall
A. Kugler
C. Serpan
R. Lobel

D. Coe (ACRS)

Contractor

D. V. Rao (SEA)

Attachment 2 to the Minutes of CRGR Meeting No. 275

Proposed Bulletin, "Potential Plugging of Emergency Core Cooling Suction by Debris in Boiling Water Reactors" and Proposed Revision 2 of the Regulatory Guide 1.82, "Water Sources for Long-Term Recirculation Cooling Following a Loss-of-Coolant Accident."

June 27, 1995

TOPIC

The proposed bulletin addresses the issue of the potential for suppression pool suction strainers of the emergency core cooling system (ECCS) in boiling water reactors (BWRs) to become clogged by debris generated following a loss-of-coolant accident (LOCA). By the NRC bulletin 93-02, "Debris Plugging of Emergency Core Cooling Suction Strainers" and its Supplement 1 the staff informed the licensees of relevant events and requested licensees to take interim actions. CRGR reviewed and endorsed the Bulletin on May 7, 1993 during the 241st meeting, and reviewed and endorsed Supplement 1 on February 18, 1994 during the 254th meeting. Bulletin 93-02 and its Supplement 1 requested only interim actions, while the current proposed bulletin would request the licensees to implement appropriate long-term procedural changes and plant modifications.

Debris blockage of pump strainers has the potential for resulting in a common cause failure of the BWR ECCS. The staff initiated efforts to re-evaluate the resolution of Unresolved Safety Issue A-43 for BWRs as blocking of pump strainers can adversely affect the ability of the ECCS to maintain adequate NPSH during a design basis LOCA. The proposed bulletin communicates to the BWR licensees the staff's final resolution of this issue and requests them to make programmatic and hardware changes to ensure the ECCS reliability following a postulated LOCA. Within 180 days the licensees are required to provide a written response to the NRC whether and to what extent they plan to comply with the requested actions.

The proposed revision to the Regulatory Guide 1.82, "Water Sources for Long-term Cooling Following a Loss-of-Coolant Accident," specifically addresses the aspects of ensuring long-term cooling which are unique to BWRs. Also, additional technical guidance is being provided to the BWR licensees on conducting evaluations to ensure compliance with 10 CFR 50.46, "Acceptance Criteria for Emergency Core Cooling Systems for Light Water Reactors." The scope of the analysis included in this proposed revision to the regulatory guide is more comprehensive then the previous one. As part of resolution of this issue, the proposed bulletin requires the licensees to (i) perform analyses in accordance with the guidance provided in the draft guide to ensure that their strainers have adequate capability to prevent loss of net positive suction head, if they intend to use passive strainers to resolve the problems; and (ii) ensure that the operators have adequate time and capability to prevent strainer clogging, if they intend to install a back-flush system to resolve the problem.

BACKGROUND

(i) Memorandum dated June 9, 1995 from Frank J. Miraglia to Edward L. Jordan, "Request for Review and Endorsement of the Proposed Bulletin titled, 'Potential Plugging of Emergency Core Cooling Suction Strainers by Debris in Boiling Water Reactors' and Proposed revision 2 of Regulatory Guide 1.82, 'Water Sources for Long-term Cooling Following a Loss-of-Coolant Accident'." The attachments are as follows:

1. Proposed Bulletin titled, "Potential Plugging of Emergency Core Cooling Suction Strainers by Debris in Boiling Water Reactors"

2. Proposed revision 2 of Regulatory Guide 1.82, "Water Sources for Long-term Cooling Following a Loss-of-Coolant Accident"

3. CRGR Review Package

4. Draft *Federal Register* Notice for proposed bulletin and draft regulatory guide

5. NUREG/CR-6224, "Parametric Study of the Potential for BWR ECCS Strainer Blockage Due to LOCA Generated Debris"

6. NRC Bulletin 93-02 and Supplement 1 to the same, "Debris Plugging of Emergency Core Cooling Suction Strainers"

(ii) E-mail from Raji Tripathi to the CRGR members, dated June 21, 1995, transmitting staff's submittal, dated June 20th, of the revised page 4 of Attachment 1 to background material item (i) above.

A copy of the briefing material distributed by the staff during the meeting is included as Attachment 2-A.

CONCLUSIONS/RECOMMENDATIONS

CRGR provided several comments on the staff's approach as well as on the content of the proposed bulletin and the proposed revision 2 of the regulatory guide. In particular, the Committee asked the staff to

- modify the text of the bulletin to include that the staff has reasonable confidence that the interim actions taken in response to previous bulletins are adequate in assuring public health and safety, and also provide rationale for allowing continued operation until the final actions requested in this bulletin are implemented by December 31, 1997.

- acknowledge in the bulletin the relevant ongoing industry efforts, specifically, by the BWR Owners Group for resolution of this issue, including the development of a utility resolution guidance document.

- address uncertainties in the analysis as currently no guidance is included in the draft guide on how to account for them.

The members also commented on the staff's innovative approach in the draft *Federal Register* of seeking specific technical comments from interested parties on five pertinent questions.

Attachment 2-B contains the excerpts from the staff's red-line/strike-out versions of the two modified proposed actions submitted to the CRGR staff identifying the pages affected by the Committee's comments, with the exception of the pages containing minor editorial changes. The staff assured the Committee that it would address the uncertainties while addressing public comments.

The Committee also asked the staff to provide estimates on the costs associated with the requested actions. In addition to verbally quoting during the meeting the cost estimates for replacement strainers installed by a licensee, the staff subsequently revised the response to questions (v) in Background Material Item (i)(3) (Attachment 3, "CRGR Review Package," of the original review material), to include design, engineering, installation, re-qualification and other costs related to the replacement strainers. The cost of new strainers was estimated by the licensee to be inconsequential compared to other costs. The revised page is included as Attachment 2-C.

The staff was asked to coordinate resolution of these comments with the CRGR staff. Subject to these comments, the Committee endorsed the two proposed actions for publication in the *Federal Register* for public comments, with the understanding that the staff would provide the CRGR staff with a copy of the as published *Federal Register* Notice.

BACKFIT CONSIDERATIONS

The proposed actions are necessary to ensure compliance with the existing regulations, namely, 10 CFR 50.46, "Acceptance Criteria for Emergency Core Cooling Systems for Light Water Reactors." The members commented that this was one of the perfect examples of the compliance exception of 10 CFR 50.109.

CRGR BRIEFING ON THE PROPOSED BULLETIN TITLED "POTENTIAL PLUGGING OF EMERGENCY CORE COOLING SUCTION STRAINERS BY DEBRIS IN BOILING WATER REACTORS," AND PROPOSED REVISION 2 OF REGULATORY GUIDE 1.82, "WATER SOURCES FOR LONG-TERM RECIRCULATION COOLING FOLLOWING A LOSS-OF-COOLANT ACCIDENT"

JUNE 27, 1995

Presented By:
Marty Virgilio
Robert Elliott
Michael Marshall

RBE 6/19/95

Attachment 2A

AGENDA

I.	INTRODUCTION/BACKGROUND	MARTY VIRGILIO
II.	PROPOSED BULLETIN	ROB ELLIOTT
III.	PROPOSED REVISION TO RG 1.82	MICHAEL MARSHALL
IV.	QUESTIONS/COMMENTS	OPEN DISCUSSION

RBE 6/19/95

BACKGROUND

I. BARSEBÄCK EVENT (JULY 1992)

II. IN 92-71, "PARTIAL PLUGGING OF SUPPRESSION POOL STRAINERS AT A FOREIGN BWR" (SEPTEMBER 1992)

III. PERRY EVENTS (JANUARY/APRIL 1993)

IV. IN 93-34 AND ITS SUPPLEMENT, "POTENTIAL FOR LOSS OF EMERGENCY COOLING FUNCTION DUE TO A COMBINATION OF OPERATIONAL AND POST-LOCA DEBRIS IN CONTAINMENT" (APRIL/MAY 1993)

V. NRCB 93-02, "DEBRIS PLUGGING OF EMERGENCY CORE COOLING SUCTION STRAINERS" (MAY 1993)

VI. PRELIMINARY RESULTS OF SEA STUDY OF A REFERENCE BWR 4, MARK I PLANT (JANUARY 1994)

VII. SKI SPONSORED OECD CONFERENCE ON THE BARSEBÄCK EVENT (JANUARY 1994)

VIII. NRCB 93-02, SUPPLEMENT 1, "DEBRIS PLUGGING OF EMERGENCY CORE COOLING SUCTION STRAINERS" (FEBRUARY 1994)

IX. STAFF/BWROG WORK TO DATE

RBE 6/19/95

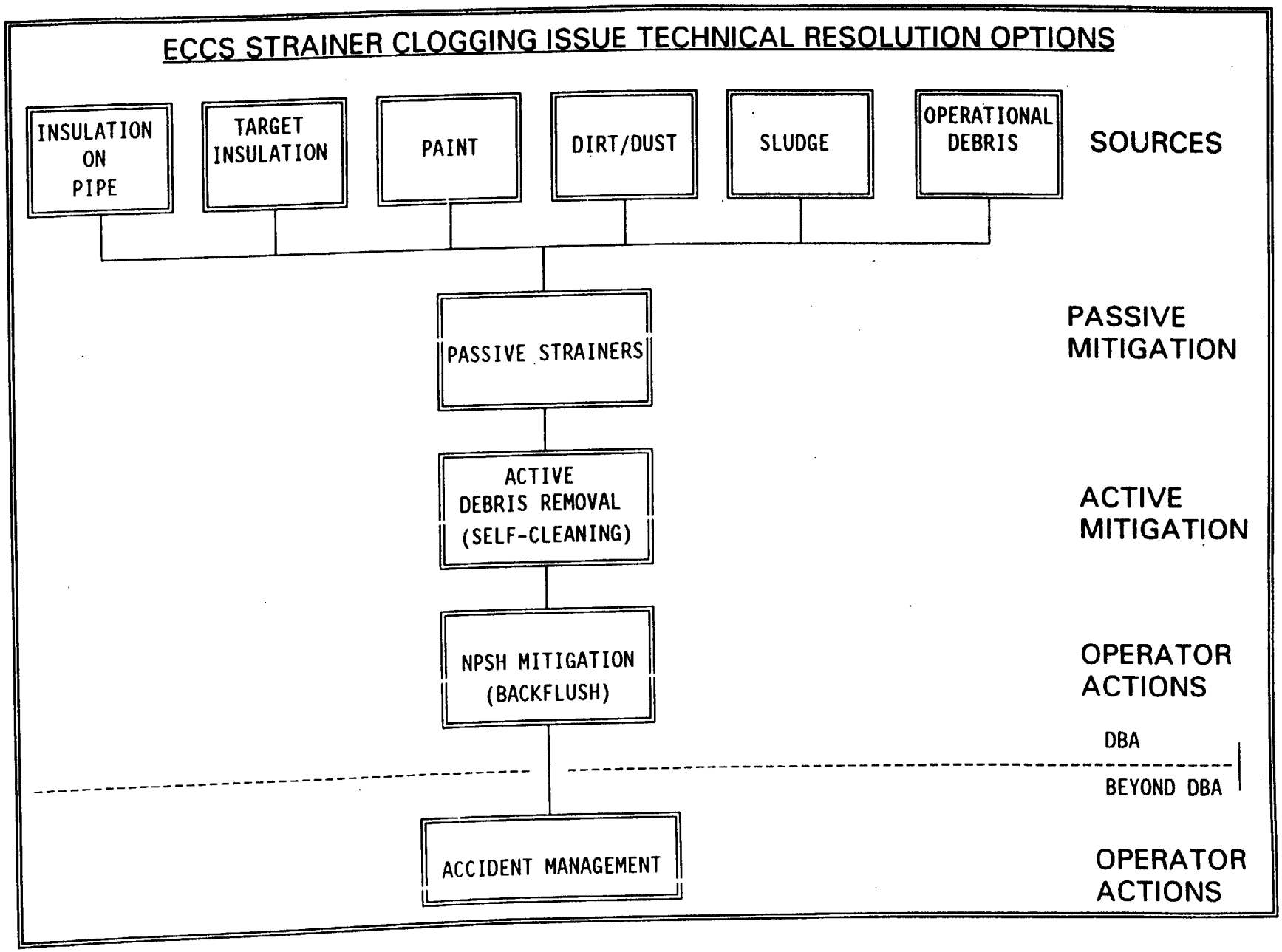
ECCS STRAINER CLOGGING ISSUE TECHNICAL RESOLUTION OPTIONS
INSULATION ON PIPE
TARGET INSULATION
PAINT
DIRT/DUST
SLUDGE
OPERATIONAL DEBRIS
SOURCES
PASSIVE STRAINERS
PASSIVE MITIGATION
ACTIVE DEBRIS REMOVAL (SELF-CLEANING)
ACTIVE MITIGATION
NPSH MITIGATION (BACKFLUSH)
OPERATOR ACTIONS
DBA
BEYOND DBA
ACCIDENT MANAGEMENT
OPERATOR ACTIONS

PATH TO RESOLUTION

- ANALYSIS AND EVENTS HAVE DEMONSTRATED THAT THERE IS A HIGH PROBABILITY OF FAILURE OF ECCS DURING A LOCA.
- NRCB 93-02 AND ITS SUPPLEMENT PROVIDE ADEQUATE INTERIM COMPENSATORY MEASURES UNTIL LONG-TERM RESOLUTION IS ACHIEVED.
- BACKFIT IS REQUIRED TO ENSURE COMPLIANCE WITH 10 CFR 50.46.
- STAFF HAS WORKED WITH THE BWROG TO REACH A RESOLUTION, RESULTING IN 3 OPTIONS.
- REG GUIDE 1.82 HAS BEEN UPDATED TO PROVIDE GUIDANCE ON IMPLEMENTATION OF BULLETIN OPTIONS FOR FOR COMPLIANCE WITH 10CFR50.46.

RBE 6/19/95

PROPOSED RESOLUTION OPTIONS

- THE PROPOSED RESOLUTION CONSISTS OF THREE OPTIONS:

  1- INSTALL A LARGE CAPACITY PASSIVE STRAINER

     A- STRAINER SIZING BASED ON ANALYSIS GUIDANCE PROVIDED IN REVISED RG 1.82.

     B- MAY NEED TO TAKE ADDITIONAL ACTIONS TO REDUCE POTENTIAL DEBRIS SOURCES.

     C- WILL NEED TO MAINTAIN STRAINER DESIGN BASIS.

     D- PREFERRED BY STAFF AND INDUSTRY.

  2- INSTALL A SELF-CLEANING STRAINER

     A- SUPPRESSION POOL CLEANING EVERY OUTAGE.

     B- TECH SPEC ACTIONS/SURVEILLANCES.

  3- INSTALL A STRAINER BACKFLUSH SYSTEM

     A- EOP REVISIONS.

     B- MEASURES TO DELAY ONSET OF STRAINER BLOCKAGE.

     C- INSTRUMENTATION/ALARMS.

     D- OPERATOR TRAINING.

     E- TECH SPEC ACTIONS/SURVEILLANCES.

     F- ANALYSIS TO ENSURE TIME/CAPABILITY TO PERFORM BACKFLUSH.

- ALL MODIFICATIONS SHOULD BE SAFETY GRADE/SINGLE FAILURE PROOF.

SPECIFIC AREAS OF COMMENT REQUESTED BY THE STAFF

- REFLECTIVE METALLIC INSULATION A POTENTIAL CONTRIBUTOR TO STRAINER BLOCKAGE?
- EFFECTIVENESS OF ALTERNATIVE STRAINER DESIGNS
  1- "STAR" STRAINER DESIGN
  2- "STACKED DISK" STRAINER DESIGN
- EFFECTIVENESS OF ACTIVE MITIGATION METHODS
  1- SELF-CLEANING STRAINER.
  2- STRAINER BACKFLUSH.
- METHODS AND ASSUMPTIONS FOR ANALYSES TO DEMONSTRATE COMPLIANCE
- SURVEILLANCE REQUIREMENTS/TECH SPECS

RBE 6/19/95

IMPACT AND FOLLOWUP ACTIONS

- BULLETIN REQUIRES RESPONSE IN 180 DAYS.
- REVIEW APPROACH.
  - REVIEW OF LICENSEE SUBMITTALS.
  - AUDIT A LIMITED NUMBER OF PLANTS.
- IMPLEMENTATION IS REQUESTED BY DECEMBER 31, 1997.
- 2 OF 3 OPTIONS REQUIRE THAT LICENSEES PERFORM AND MAINTAIN PLANT ANALYSIS.
- 2 OF 3 OPTIONS REQUIRE LICENSEES TO IMPLEMENT NEW TECH SPECS.

RBE 6/19/95

SUMMARY

- BULLETIN IS REQUIRED TO ENSURE COMPLIANCE WITH 10CFR50.46.
- REVISIONS TO REG GUIDE 1.82 ARE REQUIRED TO PROVIDE ADDITIONAL GUIDANCE ON DEMONSTRATING COMPLIANCE.
- THE STAFF WILL SEEK PUBLIC COMMENT ON FIVE SPECIFIC QUESTIONS.
  - BWROG AND STAFF TESTS CURRENTLY IN PROGRESS.
- THE STAFF'S OPTIONS FOR RESOLUTION ARE CONSISTENT WITH THOSE THAT HAVE BEEN, OR ARE BEING, TESTED BY THE INDUSTRY.

RBE 6/19/95

DESCRIPTION OF DG-1038

- PROPOSED REVISION TO REGULATORY GUIDE 1.82, REV. 1 "WATER SOURCES FOR LONG-TERM RECIRCULATION COOLING FOLLOWING A LOSS-OF-COOLANT ACCIDENT"

- REVISIONS WERE NEEDED TO:

  1- provide staff guidance for evaluating licensee compliance with 10 CFR 50.46

  2- better address BWRs and incorporate current knowledge and experience

- BASIS OF REVISIONS

  1- NUREG/CR-6224 "Parametric Study of the Potential for BWR ECCS Strainer Blockage Due to LOCA Generated Debris" (April 1995)

  2- USNRC sponsored experiments at Alden Research Laboratory

  3- recent events (e.g., Barsebäck, Perry)

  4- activities (incl. experiments) of foreign utilities and regulatory bodies

  5- activities (incl. experiments) of industry groups

Attachment 2A (Cont.)

CHANGES IN DG-1038

- SECTION A: OVERVIEW

  reference to current regulatory documents and potential debris sources

- SECTION B: DISCUSSION

  1- PWRs: no changes

  2- BWRs: better acknowledge characteristics of BWRs

- SECTION C: REGULATORY POSITION

  1- PWRs: no changes

  2- BWRs: expanded list of features and actions that can be used to minimize loss of long-term cooling capability, and criteria for analyses to ensure compliance with 10 CFR 50.46 clarified and expanded

- SECTION D: IMPLEMENTATION

  guidance for staff reviews to ensure compliance with 10 CFR 50.46

- APPENDIX A

  no changes

- APPENDIX B

  added to provide examples of possible active strainer systems for BWRs

OVERVIEW OF SECTION C.2.1

Measures to Ensure Long-Term Capability of ECCS*

PASSIVE STRAINERS

Section C.2.1.1

REDUCE POTENTIAL DEBRIS

Section C.2.1.2

ADDITIONAL INDICATIONS

Section C.2.1.3

ACTIVE STRAINER SYSTEM

ADDITIONAL INSERVICE INSPECTIONS

Section C.2.1.5

* Combinations of these measures are identified as options in the proposed Bulletin.

OVERVIEW OF SECTION C.2.2

Analysis Guidance and Assumptions

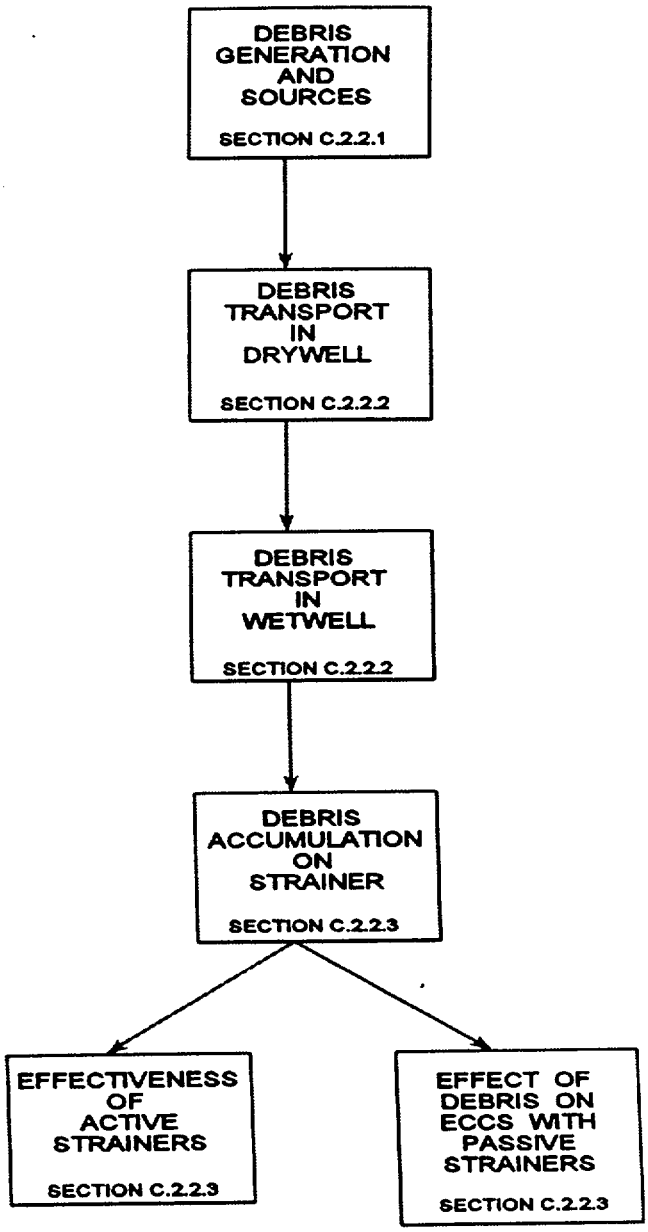

- The RG does not provide a "cookbook" evaluation process for all BWRs.

Attachment 2-B

Excerpts from the Proposed Bulletin (6 pages)
Excerpts from the draft Revision of the Proposed Reg. Guide (4 pages)

Intentionally Withheld

Raj Tripathi
10/20/97

UNITED STATES
NUCLEAR REGULATORY COMMISSION
WASHINGTON, D.C. 20555-0001

April 27, 1995

MEMORANDUM TO: James M. Taylor
Executive Director for Operations

FROM: Edward L. Jordan, Chairman
Committee to Review Generic Requirements

SUBJECT: MINUTES OF CRGR MEETING NUMBER 271

The Committee to Review Generic Requirements (CRGR) met on Tuesday, April 11, 1995 from 8:00 a.m. to 1:45 p.m. A list of attendees is provided in Attachment 1. The following items were discussed at the meeting:

1. The CRGR was presented an information briefing regarding the steam generator tube cracking problems at Maine Yankee and the possible issuance of a generic letter to address the implications of this experience. The staff did not request CRGR endorsement at this meeting for issuing a generic letter; but the Committee did offer suggestions regarding points needing emphasis or clarification in the event a letter is issued. This matter is discussed in Attachment 2.

2. The CRGR reviewed the proposed final amendment to 10 CFR50.36 to codify the criteria in the Policy Statement on Technical Specifications Improvements that define the requirements to be controlled by technical specifications. The Committee endorsed going forward with the proposed amendment, subject to several modifications and clarifications discussed at the meeting. This matter is discussed in Attachment 3.

3. The CRGR was presented an information briefing on the status of the action plan for fuel cycle facilities, the proposed revision to 10 CFR Part 70, and the recent Commission direction regarding consideration of alternative approaches in these areas. No formal CRGR recommendations resulted from these discussions; but the Committee offered several preliminary suggestions regarding possible area of focus in considering alternative approaches. This matter is discussed in Attachment 4.

In accordance with the EDO's July 18, 1983 directive concerning "Feedback and Closure of CRGR Review," a written response is required from the cognizant office to report agreement or disagreement with the CRGR recommendations in these minutes. The response is to be forwarded to the CRGR Chairman and if there is disagreement with the CRGR recommendations, to the EDO for decision making.

Questions concerning these meeting minutes should be referred to James H. Conran (415-6839).

Attachments: As stated

cc: Next page

cc: Commission (5)
SECY
J. Lieberman, OE
P. Norry, ADM
D. Williams, OIG
K. Cyr, OGC
J. Larkins, ACRS
Office Directors
Regional Administrators, RI/RII/RIII/RIV
CRGR Members
B. Sheron, NRR
B. Grimes, NRR
R. Burnett, NMSS

Attachment 1 to the Minutes of CRGR Meeting No. 271

Attendance List

April 11, 1995

CRGR Members

E. Jordan
D. Crutchfield (for F. Miraglia)
M. Knapp
J. Murphy
J. Rutberg
E. Merschoff

CRGR Staff

J. Conran

NRC Staff

B. Sheron
J. Strosnider
R. Jones
E. Sullivan
K. Karwoski
J. Donoghue
D. Lynch
R. Kiessel
I. Barnes
N. Dudley
E. Benner
B. Grimes
C. Grimes
G. Holahan
N. Gilles
R. Burnett
L. Ten Eyck
W. Schwink
T. Sherr
R. Pierson
B. Mendelsohn
C. Nilsen
T. Cox
J. Swift
M. Tokar
R. Auluck
R. Milstein
D. Daman
D. Ayres

cc: Commission (5)
SECY
J. Lieberman, OE
P. Norry, ADM
D. Williams, OIG
K. Cyr, OGC
J. Larkins, ACRS
Office Directors
Regional Administrators, RI/RII/RIII/RIV
CRGR Members
B. Sheron, NRR
B. Grimes, NRR
R. Burnett, NMSS

Distribution to CRGR Minutes 271
Central File w/att.
PDR (NRC/CRGR) w/o att.
CRGR SF
CRGR CF
STreby
JMilhoan
MTaylor
REmrit
DRoss
JConran
RTripathi
JStrosnider
ESullivan
RJones
MWeber
CGrimes
NGilles
WSchwink
TCox
JSwift

Attachment 2 to the Minutes of CRGR Meeting No. 271

Briefing on Steam Generator Tube Cracking at Maine Yankee

April 11, 1995

TOPIC

B. Sheron (NRR), J. Strosnider (NRR), and K. Karwoski (NRR), presented an information briefing to CRGR regarding the steam generator (SG) tube cracking problems at Maine Yankee and the possible issuance of a generic letter to address the implications of this experience. The staff was still in the process of evaluating the safety implications of the extensive circumferential cracking in SG tubes identified during recent tube inspections at that facility, and was not yet prepared to request CRGR endorsement of a generic letter at this meeting. The staff wanted the benefit of consultation with CRGR in this matter, however, in the event that circumstances subsequently dictated prompt issuance of an immediately effective generic letter (i.e., without prior review by CRGR, and with no opportunity for public comment.)

A working draft generic letter and two additional briefing slides, distributed to the Committee at the meeting, were used to guide the presentations and discussions at the meeting; copies are enclosed (Attachment 2A).

BACKGROUND

No documents were provided to the Committee in advance of the meeting for this item. Copies of briefing materials distributed at the meeting are enclosed (Attachment 2A).

RECOMMENDATIONS/CONCLUSIONS

The staff did not request CRGR endorsement for issuance of a generic letter at this time; but the Committee did offer several comments and suggestions regarding points needing emphasis or clarification, as follows:

1. The discussion of the circumferential cracking problems discovered at Maine Yankee, in the working draft generic letter made available at the meeting, does not focus clearly on whether the test indications noted in the Maine Yankee inspections are due primarily to increased threshold sensitivity of the test method employed or to rapid crack growth. Further light may be shed on this question when the destructive examination data is more fully evaluated, and if proper comparative evaluations are made between the recent test data and the test data from previous inspection cycles. The Committee felt strongly that this question should be given greater emphasis, and the need for this information be made clearer in the generic letter, in order to bring the safety implications of this experience into proper focus.

2. The treatment of issues in the current working draft generic letter leaves unclear whether or not the continued use of the rotating pancake coil probe (RPC), and plugging of SG tubes when circumferential cracking is first indicated by RPC inspections, is/is not considered unacceptable

by the staff at this point. Some clarification on this point would be useful.

3. Whatever specific approach is ultimately taken to address the SG circumferential cracking concerns raised by the Maine Yankee experience, the clearly stated objective should be: whatever technology is used for SG tube inspections, tell us what is the threshold sensitivity of the measure-ment (with regard to crack depth); what is the crack growth rate based on experience (i.e., comparison of inspection data from cycle-to-cycle); and in view of these factors, why it is safe to operate to end-of-cycle.

MLIG [illegible]
SG Tube Cracking
4/[illegible]/95

UNITED STATES
NUCLEAR REGULATORY COMMISSION
OFFICE OF NUCLEAR REACTOR REGULATION
WASHINGTON, D.C. 20555-0001

April xx, 1995

NRC GENERIC LETTER 95-xx: CIRCUMFERENTIAL CRACKING OF STEAM GENERATOR TUBES

Addressees

All holders of operating licenses or construction permits for pressurized water reactors (PWRs).

Purpose

The U.S. Nuclear Regulatory Commission (NRC) is issuing this generic letter to (1) notify addressees about the recent steam generator tube inspection findings at Maine Yankee and the safety significance of these findings, (2) request that all addressees implement the actions described herein, and (3) require that all addressees provide to NRC written response to this generic letter relating to implementation of the requested actions. This generic letter also requests that certain information related to the subject matter of this generic letter be submitted to NRC.

In addition, this letter alerts addressees to the importance of performing comprehensive examinations of steam generator tubes using techniques and equipment capable of reliably detecting steam generator tube degradation to which they may be susceptible. The staff believes that these examinations are consistent with, as well as required by Appendix B to Part 50 of Title 10 of the Code of Federal Regulations (10 CFR Part 50) and that failure to reliably detect degradation such that the steam generators are operated outside their design basis is considered a violation of 10 CFR Part 50, Appendix B.

Background

In July 1994, the licensee for Maine Yankee Atomic Power Station shut down the plant as a result of steam generator primary-to-secondary leakage. Details of the steam generator tube inspections and investigations are contained in NRC Information Notice 94-88, "Inservice Inspection Deficiencies Result in Severely Degraded Steam Generator Tubes," issued on December 23, 1994. As discussed in the information notice, inadequate eddy current test procedures appeared to have been the primary reason the tubes became severely degraded before their discovery. In fact, with hindsight, most of the indications identified in 1994 could be traced back to at least 1990.

After approximately 6 months of operation, the licensee for Maine Yankee commenced another inspection of the steam generator tubes. The eddy current probe (i.e., a 3-coil rotating pancake coil probe) and screening criteria used at the start of the outage were similar to those used during the 1994

Attachment 2A

inspections. These initial inspections resulted in the identification of a number of circumferential cracks that were larger than anticipated for the amount of time between the inspections. These results, in part, led the licensee to perform additional inspections with a Plus-Point probe, an enhanced type of rotating pancake coil (RPC) probe. These enhanced inspections resulted in the identification of many more tubes with circumferential cracks than had previously been identified with the RPC probe. Penetrant testing confirmed that several indications identified with the Plus-Point probe were circumferential cracks. Furthermore, the destructive examination of three tubes removed from the steam generators (2 with marginal Plus-Point responses and 1 with an intermediate Plus-Point response) confirmed that the tubes had circumferential cracks. The preliminary results from the destructive examination indicate that the three pulled tubes had maximum depths of 45%, 37%, and 57% with average depths of 24%, 23%, and 26%, respectively. In addition, the preliminary results indicate that the circumferential extent of these indications were underestimated during the nondestructive examination in the field.

Discussion

(1) Operating Experience

Both the Nuclear Regulatory Commission (NRC) and the industry have identified the reliable detection and sizing of circumferential cracks in steam generator tubes as a technical issue of concern. The detection of circumferentially oriented cracks at various locations on the steam generator tubes has resulted in the publication of several NRC information notices (90-49, 92-80, 94-05, and 94-88) and has resulted in several meetings between the NRC staff and the PWR owners groups, the industry (Electric Power Research Institute), and various licensees. The sizing of circumferential cracks has been discussed in meetings between the NRC staff and industry representatives from the Steam Generator Strategic Management Program (SGMP) on January 12 and February 22, 1995.

A number of factors affect the detection of circumferential cracking. These factors can be both plant specific and generic. They include, but are not limited to, the nondestructive examination methods used for the inspection (e.g., probes, instruments, and hardware) including the extent to which multiple techniques are relied upon, the equipment setup for these techniques, the analysis of the nondestructive examination data, the data analyst training and performance demonstration program, and the methods used to minimize interfering signals.

Circumferential cracks are removed from service by plugging or sleeving upon detection. This is due, in part, to (1) the inability to reliably size these indications, (2) the threshold of detection for circumferential indications, and (3) the inability to reliably predict crack growth rates. In addition, more data, including both laboratory and pulled tube data, are needed to support the reliable detection and sizing of these indications.

(2) Safety Assessment

Based on previous NRC studies (e.g., NUREG-0844), an immediate safety concern based on probability and risk considerations does not exist; however, since tube ruptures represent a failure of one of the principal fission product boundaries and they present a pathway for primary system activity release to the environment, all reasonable precautions should be taken to prevent such an occurrence.

Inspection practices should furnish assurance that steam generator tube degradation will be reliably detected so that the potential for the rupturing of a tube is maintained at an acceptably low level. If licensees conclude that unexpected levels of tube degradation may exist in their steam generators, they should implement compensatory measures to minimize the chance that tube integrity is compromised, and to ensure that the plant can safely respond to a tube failure. Such measures should have the objective of maintaining a safe operating posture through a defense-in-depth philosophy of (1) prevention of uncontrolled tube degradation, (2) early detection of tube degradation, and (3) mitigation of the consequences of failed tubes.

To verify compliance with the regulatory requirements and to maintain an appropriate degree of defense-in-depth measures, the NRC has concluded that it is appropriate for PWR licensees to take the measures enumerated in this generic letter.

Requested Actions

All addressees are requested to:

1. Evaluate the recent operating experience with respect to the detection and sizing of circumferential indications to determine the applicability to their plant.

2. Based on the evaluation in Item (1) above, determine what actions, if any, are needed to ensure that the steam generators can be safely operated, consistent with applicable regulatory criteria, until the next steam generator tube inspections.

3. Develop plans for the next steam generator tube inspections as they pertain to the detection of circumferential cracking. The inspection plan should address, but not be limited to, scope (including expansion criteria, if applicable), methods, equipment, and criteria (including personnel training and qualification).

Licensees are encouraged to work closely with industry groups on coordination of inspections, evaluations, and repair options for all forms of steam generator tube degradation. In the interest of optimizing the use of resources, licensees are encouraged to develop generic safety assessments and inspection plans as described above for logical groupings of plants, where possible. Plant-specific factors that may affect the applicability of the generic assessment to a plant should be addressed (e.g., gross chemistry excursions).

Requested Information

All licensees are requested to provide:

1. A safety assessment justifying continued operation which is based on the evaluations performed in accordance with the above requested actions (1) and (2)

2. A summary of the inspection plan developed in accordance with the above requested action (3)

3. The NRC is aware that generic industry guidance with respect to performing steam generator tube inspections has been developed and is continually being updated. If the addressee intends to follow the guidance developed for this issue by the industry, reference to these and other relevant generic documents is acceptable, and encouraged, as part of the response, as long as the referenced documents have been officially submitted to the NRC. However, as described previously, additional plant-specific information is required to establish the justification for continued operation.

Required Response

Within 60 days from the date of this generic letter, all addressees are required to submit a written response:

1. Indicating whether or not the addressee will implement the actions requested above. If the addressee intends to implement the requested actions, provide a schedule for completing implementation. If a n addressee chooses not to take the requested actions, provide a description of any proposed alternative course of action, the schedule for completing the alternative course of action (if applicable), and the safety basis for determining the acceptability of the planned alternative course of action.

2. To the information request specified above.

The NRC recognizes that addressees may have already conducted inspections and/or performed safety assessments. However, as the inspection scope and details of the methods used should reflect cumulative experience to date, as appropriate, this required response applies to all PWRs.

Address the required written reports to the U.S. Nuclear Regulatory Commission, ATTN: Document Control Desk, Washington, D.C. 20555-0001, under oath or affirmation under the provisions of Section 182a, Atomic Energy Act of 1954, as amended, and 10 CFR 50.54(f). In addition, submit a copy to the appropriate regional administrator.

Related Generic Communications

NRC Information Notice 94-88, "Inservice Inspection Deficiencies Result in Severely Degraded Steam Generator Tubes," December 23, 1994

NRC Information Notice 94-62, "Operational Experience on Steam Generator Tube Leaks and Tube Ruptures," August 30, 1994

NRC Information Notice 94-43, "Determination of Primary-to-Secondary Steam Generator Leak Rate," June 10, 1994

NRC Information Notice 94-05, "Potential Failure of Steam Generator Tubes Sleeved With Kinetically Welded Sleeves," January 19, 1994

NRC Information Notice 93-56, "Weaknesses in Emergency Operating Procedures Found as a Result of Steam Generator Tube Rupture," July 22, 1993

NRC Information Notice 93-52, "Draft NUREG-1477, 'Voltage-Based Interim Plugging Criteria for Steam Generator Tubes,'" July 14, 1993

NRC Information Notice 92-80, "Operation With Steam Generator Tubes Seriously Degraded," December 7, 1992

NRC Information Notice 91-67, "Problems With the Reliable Detection of Intergranular Attack (IGA) of Steam Generator Tubing," October 21, 1991

NRC Information Notice 91-43, "Recent Incidents Involving Rapid Increases in Primary-to-Secondary Leak Rate," July 5, 1991

NRC Information Notice 90-49, "Stress Corrosion Cracking in PWR Steam Generator Tubes," August 6, 1990

NRC Information Notice 88-99, "Detection and Monitoring of Sudden and/or Rapidly Increasing Primary-to-Secondary Leakage," December 20, 1988

NRC Bulletin 88-02, "Rapidly Propagating Cracks in Steam Generator Tubes," February 5, 1988

Backfit Discussion

The actions requested in this generic letter are considered backfits in accordance with NRC procedures. Because established regulatory requirements exist, but may not be satisfied, these backfits are necessary to verify that the addressees are in compliance with existing requirements. Therefore, on the basis of 10 CFR 50.109(a)(4)(i), a full backfit analysis was not performed. An evaluation was performed in accordance with NRC procedures, including a statement of the objectives of, and reasons for, the requested actions and the basis for invoking the compliance exception. A copy of this evaluation will be made available in the public document room.

Federal Register Notification

A notice of opportunity for public comment was not published in the Federal Register because of the urgent nature of the actions requested by the generic letter. However, comments on the actions requested and the technical issue addressed by this generic letter may be sent to the U.S. Nuclear Regulatory Commission, ATTN: Document Control Desk, Washington, D.C. 20555-0001.

Paperwork Reduction Act Statement

The information collections contained in this request are covered by the Office of Management and Budget clearance number 3150-0011, which expires July 31, 1997. The public reporting burden for this collection of information is estimated to average 350 hours per response, including the time for reviewing instructions, searching existing data sources, gathering and maintaining the data needs, and completing and reviewing the collection of information. Send comments regarding this burden estimate or any other aspect of this collection of information, including suggestions for reducing this burden, to the Information and Records Management Branch, (T-6 F33), U.S. Nuclear Regulatory Commission, Washington, D.C., 20555-0001, and to the Desk Officer, Office of Information and Regulatory Affairs, NEOB-10202, (3150-0011), Office of Management and Budget, Washington, D.C. 20503.

Compliance with the following request for information is voluntary. The information would assist the NRC in evaluating the cost of complying with this generic letter.

(1) the licensee staff time and costs to perform requested record reviews and develop plans for inspections

(2) the licensee staff time and costs to prepare the requested reports and documentation

(3) the additional short-term costs incurred as a result of the inspection findings such as the cost of the corrective actions or the costs of down time

(4) an estimate of the additional long-term costs that will be incurred as a result of implementing commitments such as the estimated costs of conducting future inspections and repairs

If you have any questions about this matter, please contact one of the technical contacts listed below or the appropriate Office of Nuclear Reactor Regulation project manager.

Roy P. Zimmerman
Associate Director for Projects
Office of Nuclear Reactor Regulation

Technical contact(s): EMCB
(301) 415-xxxx

SRXB
(301) 415-xxxx

Lead Project Manager: PDx-x
(301) 415-xxxx

Handout - Fig 2 7.
SG Tube Cracking

EXPANSION-TRANSITION

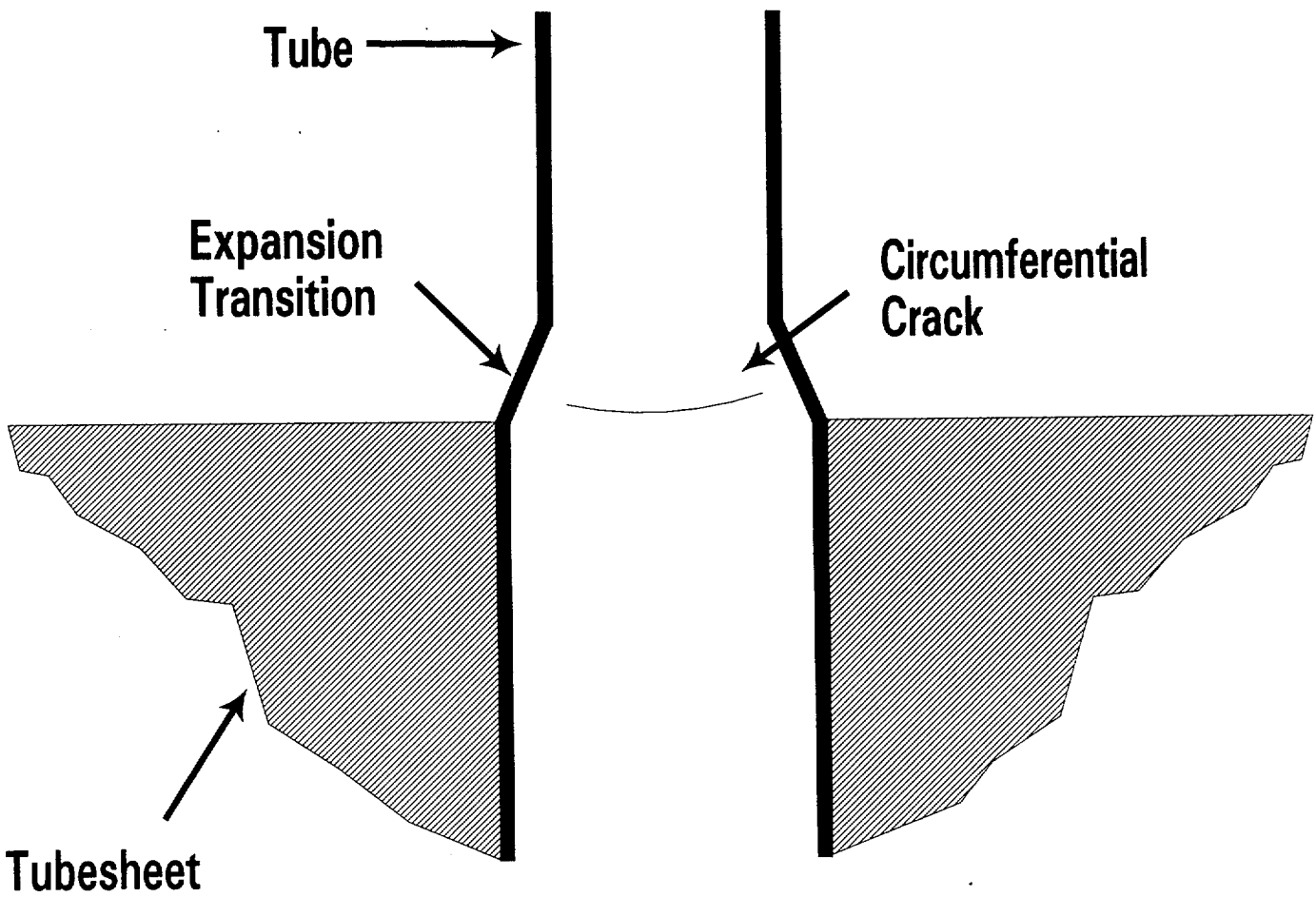

Handout - May [illegible]
SC Tube Cracks

PRELIMINARY RESULTS

R79C90

Probe	Circumferential Extent	Maximum Through-wall	Average Through-wall
Plus-Point	Marginal	Marginal	Marginal
High Frequency RPC	295°	36%	30%
Metallography	360°[1]	45%	24%

R87C78

Probe	Circumferential Extent	Maximum Through-wall	Average Through-wall
Plus-Point	Marginal	Marginal	Marginal
High Frequency RPC	235°	32%	21%
Metallography	360°	37%	23%

R90C57

Probe	Circumferential Extent	Maximum Through-wall	Average Through-wall
Plus-Point	Intermediate	Intermediate	Intermediate
High Frequency RPC	216°	44%	27%
Metallography	360°	57%	26%

[1] Requires verification

NRR STAFF PRESENTATION TO THE CRGR

SUBJECT:	FINAL RULE CHANGE TO 10 CFR 50.36 TECHNICAL SPECIFICATIONS
DATE:	April 11, 1995
PRESENTER:	Nanette V. Gilles
TITLE:	Senior Operations Engineer
BRANCH/DIV.:	OTSB/DOPS
PHONE NO.:	415-1180

Attachment 3A

FINAL RULE FOR 10 CFR 50.36 TECHNICAL SPECIFICATIONS

- Interim Policy Statement Published February 1987
- Improved Standard Technical Specifications Issued September 1992
  - Reduce LCOs by ≈ 40%
  - Achieve Substantial Consistency in Requirements
  - Present Requirements in Operator-Friendly Format
  - Enhance Bases: Links Requirements to Safety Analyses
  - Clarify Many Long-Standing Technical Issues

FINAL RULE FOR 10 CFR 50.36 TECHNICAL SPECIFICATIONS (continued)

- Commission Directed Rulemaking May 1993
  - Codify Four Criteria From Policy Statement
  - Preserve Voluntary Nature of Program
- ACRS Letter Dated June 18, 1993: Concern With Application of Criterion 4
- Final Policy Statement Published July 22, 1993
- Proposed Rule Published September 20, 1994

TECHNICAL SPECIFICATION CRITERIA

1 Reactor Coolant Pressure Boundary Instrumentation

2 Initial Condition of a Design Basis Accident or Transient

3 Primary Success Path to Mitigate a Design Basis Accident or Transient

4 Safety Significant from Operating Experience or Probabilistic Risk Assessment

CRITERION 4

A structure, system, or component which operating experience or probabilistic risk assessment has shown to be significant to public health and safety.

USE OF CRITERION 4

- Consistent with PRA Policies
- Requirements Needed for Adequate Protection
- PRA Implementation Plan to Establish PRA Application Guidelines
- Prior Experience and Backfit Rule Provide Guidance

RULE OPTIONS

- Issue Final Rule Now
  - Proceed to Develop PRA Application Guidelines
  - Use Backfit Rule for Required Additions
- Hold Final Rule in Abeyance
  - Complete PRA Application Guidelines
  - Likely More Than a Year Delay
- NRC Staff Recommends Issuance Immediately

STATUS OF CONVERSIONS

	Number of Units
○ Amendments Issued	5
○ Amendments Under Review	8
○ Intend to Convert	30

CRGR BRIEFING

PROPOSED REWRITE OF 10 CFR PART 70

WITH SUPPORTING GUIDANCE

APRIL 11, 1995

Attachment 4A

FAMILIARIZATION BRIEFING

- PURPOSE OF PART 70
- CURRENT REGULATORY ENVIRONMENT
- CURRENT OPERATIONAL ENVIRONMENT
- PROPOSED REGULATORY APPROACH
- MILESTONES

PURPOSE OF PART 70

- DOMESTIC LICENSING OF SPECIAL NUCLEAR MATERIAL

- PUBLIC & WORKER SAFETY

  - RADIOLOGICAL
  - TOXICOLOGICAL

- ENVIRONMENTAL PROTECTION

  - SITING
  - EFFLUENTS

- NATIONAL SECURITY INTERESTS

  - THEFT
  - DIVERSION

PART 70 OVERVIEW

- SNM LICENSEES

  -VARY IN SIZE AND COMPLEXITY
  -COLLECTION OF VARIOUS PROCESSES
  -CONSTANT CHANGES TO PROCESSES
  -COMPETITIVE INDUSTRY

- HAZARDS

  -NUCLEAR CRITICALITY....ACUTE FATALITY
  -RADIOACTIVE CHEMICALS
  -TOXIC CHEMICALS

CURRENT REGULATORY ENVIRONMENT

- LONG RE-LICENSING INTERVALS
- LICENSING PROCESS NOT STANDARDIZED
- KNOWLEDGE OF SAFETY BASIS LACKING
- NO HAZARDS ANALYSIS
- CHANGES TO PROGRAM NOT ADEQUATELY REPORTED
- SEGMENTED COLLECTION OF PRESCRIPTIVE REQUIREMENTS
- INSUFFICIENT REPORTING OF POTENTIAL CRITICALITIES
- INSPECTION/ENFORCEMENT BASIS LACKING

CURRENT OPERATIONAL ENVIRONMENT

- **NUMEROUS INSPECTION VIOLATIONS**

  -RADIATION PROTECTION
  -CRITICALITY SAFETY

- HIGH EVENT FREQUENCY

  -EQUIPMENT FAILURE AND DESIGN ERROR
  -MAINTENANCE
  -VIOLATION OF PROCEDURES & CONTROLS
  -FIRE
  -HUMAN ERROR

- SIGNIFICANT EVENTS

  -PERSON KILLED AT SEQUOYAH FRCM CHEMICAL HAZARD
  -POTENTIAL CRITICALITY INCIDENT AT GE

VIOLATIONS IDENTIFIED BY INSPECTION PROCEDURE

INSPECTION PROCEDURES	VIOLATIONS PER YEAR						TOTAL VIOLATIONS
	1989	1990	1991	1992	1993	1994	
83822 Radiation Protection	**2**	**2**	**20**	**26**	**16**	**8**	**74**
84850 Rad Waste Management - Inspection					1	1	2
88005 Management Organization & Controls				3	3	1	7
88010 Operator Training/ Retraining		1		2	1	1	5
88015 Criticality Safety		**1**	**4**	**11**	**24**	**6**	**46**
88020 Operations Review	1	1		7	6	6	21
88025 Maintenance & Surveillance Testing				3	2	3	8
88035 Rad Waste Management				1		1	2
88045 Environmental Protection			2	2	1		5
88050 Emergency Planning	1	1	3	8	2	3	18
TOTALS	**4**	**9**	**30**	**72**	**64**	**31**	**210**

CURRENT OPERATIONAL ENVIRONMENT

- NUMEROUS INSPECTION VIOLATIONS

  -RADIATION PROTECTION
  -CRITICALITY SAFETY

- **HIGH EVENT FREQUENCY**

  -EQUIPMENT FAILURE AND DESIGN ERROR
  -MAINTENANCE
  -VIOLATION OF PROCEDURES & CONTROLS
  -FIRE
  -HUMAN ERROR

- SIGNIFICANT EVENTS

  -PERSON KILLED AT SEQUOYAH FROM CHEMICAL HAZARD
  -POTENTIAL CRITICALITY INCIDENT AT GE

FUEL FABRICATION FACILITY EVENTS AND CAUSES
(NUREG-1272 AND NRER)

EVENT CAUSES	EVENTS PER YEAR								TOTAL EVENTS
	1987	1988	1989	1990	1991	1992	1993	1994 (first half)	
Weather				1	1	2	1	2	7
Mechanical failure	2	1	1		12	12	16	2	46
Equipment design error					2	5	3	4	14
Maintenance	3					2	4	1	10
Quality assurance					1				1
Violation of procedures/requirements/controls		4		3		2	8	3	20
Operation not supported by safety analysis					1		4	2	7
Inadequate procedures	1	1			1		2	1	6
Inadequate management controls							4		4
Documentation error		2			1				3
Inadequate documentation				1					1
Fire	1	1	2	5	3	2	4	1	19
Explosion	2			1		1			4
Transportation event				1	1		2		4
False alarm			2			2	1		4
General human error/poor judgement	5	2	1	5	9	10	9	2	43
Unknown/not specified	4	2	6	2	12	12	2	1	42
Total events reviewed	**16**	**14**	**10**	**17**	**42**	**41**	**51**	**16**	**207**

CURRENT OPERATIONAL ENVIRONMENT

- NUMEROUS INSPECTION VIOLATIONS

  -RADIATION PROTECTION
  -CRITICALITY SAFETY

- HIGH EVENT FREQUENCY

  -EQUIPMENT FAILURE AND DESIGN ERROR
  -MAINTENANCE
  -VIOLATION OF PROCEDURES & CONTROLS
  -FIRE
  -HUMAN ERROR

- **SIGNIFICANT EVENTS**

  -PERSON KILLED AT SEQUOYAH FROM CHEMICAL HAZARD
  -POTENTIAL CRITICALITY INCIDENT AT GE

NRC RESPONSE

- **BULLETIN 91-01 "REPORTING LOSS OF CRITICALITY SAFETY CONTROLS"**

  -PROMPT EVALUATION AND REPORTING OF CRITICALITY-RELATED EVENTS (VOLUNTARY)

- REGULATORY REVIEW TASK FORCE

  -NUREG-1324 "PROPOSED METHOD FOR REGULATING MAJOR FUEL FACILITIES"

  -IDENTIFIED WEAKNESSES IN PRESENT PROGRAM

- NMSS REORGANIZATION

- ACTION PLAN DEVELOPED
  -STRENGTHEN REGULATORY BASE

CRITICALITY-RELATED EVENTS FOR 7 FUEL FABRICATION FACILITIES
(BULLETIN 91-01 REPORTABLE)

EVENT CAUSES	EVENTS PER YEAR				TOTAL EVENTS
	1991 (from 11/05)	1992	1993	1994 (to 3/22)	
Mechanical failure	2	5	8		15
Equipment design error		5	1	1	7
Maintenance		3	3	2	8
Quality assurance					
Violation of procedures/requirements/controls		3	8	3	14
Operation not supported by safety analysis			5		5
Inadequate procedures			6	2	8
Inadequate management controls			7		7
Fire		1			1
General human error/poor judgement		6	1		7
Total events reviewed	**2**	**18**	**27**	**7**	**54**

NRC RESPONSE

- BULLETIN 91-01 "REPORTING LOSS OF CRITICALITY SAFETY CONTROLS"
  - -PROMPT EVALUATION AND REPORTING OF CRITICALITY-RELATED EVENTS (VOLUNTARY)
- REGULATORY REVIEW TASK FORCE
  - -NUREG-1324 "PROPOSED METHOD FOR REGULATING MAJOR FUEL FACILITIES"
  - -IDENTIFIED WEAKNESSES IN PRESENT PROGRAM
- NMSS REORGANIZATION
- ACTION PLAN DEVELOPED
  - -STRENGTHEN REGULATORY BASE

RECOMMENDATIONS FROM NUREG-1324

- INTEGRATED SAFETY ANALYSIS TO IDENTIFY RISKS
- FIRE PROTECTION PROGRAM
- CHEMICAL PROCESS SAFETY PROGRAM
- MANAGEMENT CONTROLS AND OVERSIGHT
- CONFIGURATION MANAGEMENT PROGRAM
- QUALITY ASSURANCE PROGRAM
- MAINTENANCE PROGRAM
- TRAINING PROGRAM
- UNUSUAL OCCURRENCE REPORTING

NRC RESPONSE

- BULLETIN 91-01 "REPORTING LOSS OF CRITICALITY SAFETY CONTROLS"
  - -PROMPT EVALUATION AND REPORTING OF CRITICALITY-RELATED EVENTS (VOLUNTARY)
- REGULATORY REVIEW TASK FORCE
  - -NUREG-1324 "PROPOSED METHOD FOR REGULATING MAJOR FUEL FACILITIES"
  - -IDENTIFIED WEAKNESSES IN PRESENT PROGRAM
- **NMSS REORGANIZATION**
- **ACTION PLAN DEVELOPED**
  - **-STRENGTHEN REGULATORY BASE**

PROPOSED REGULATORY APPROACH

- PART 70 REVISION
- STANDARD FORMAT AND CONTENT GUIDE
- STANDARD REVIEW PLAN
- INTEGRATED SAFETY ANALYSIS GUIDANCE DOCUMENT

OBJECTIVES OF PART 70 REWRITE

- TAKE PERFORMANCE-ORIENTED, RISK BASED, INTEGRATED SYSTEMS APPROACH
- REDUCE UNCERTAINTY IN SAFETY REGULATORY BASIS
- REDUCE PRECURSORS TO UNWANTED RISK SCENARIOS
- CODIFY STAFF GENERIC GUIDANCE & CURRENT PRACTICE
- INCORPORATE RECOMMENDATIONS FROM REGULATORY REVIEWS
- REDUCE UNNECESSARY BURDEN ("50.59-TYPE" CHANGES AND "LIVING LICENSE")
- DEVELOP USER-FRIENDLY REGULATIONS

DIVERSITY OF PART 70 SNM LICENSEES

GROUP	ACTIVITY	BUSINESS
A	SEALED FORM (< CRITICAL MASS)	UNIVERSITIES HOSPITALS GOVERNMENT INDUSTRY
B	UNSEALED FORM (< CRITICAL MASS)	
C	ANY FORM (> CRITICAL MASS)	SEALED SOURCES RESEARCH FACILITIES
D	FUEL FABRICATION	FUEL CYCLE FACILITY
E	URANIUM ENRICHMENT	ENRICHMENT FACILITY
F	PRODUCTION/UTILIZATION	REACTORS

GROUPS A & B
(< CRITICAL MASS)

- MAINTAIN PRESCRIPTIVE REQUIREMENTS TO MINIMIZE IMPACT ON AGREEMENT STATES

- CURRENT SITUATION
  - NOT INSPECTED ON ROUTINE BASIS
  - LICENSEE MAY NO LONGER EXIST
  - LOCATION OF SNM MAY NOT BE KNOWN

- RISK TO PUBLIC
  - JUNK YARD & RECYCLED MATERIAL
  - KITCHEN TABLE LEGS & TOYS

- PROPOSED CHANGE TO REDUCE RISK
  - ANNUAL REGISTRY
  - CURRENT OWNERSHIP AND LOCATION OF SNM
  - SNM QUANTITY, TYPE, FORM & ENRICHMENT

GROUPS C, D, E & F
(GRADED ACCORDING TO RISK)

- IDENTIFY HAZARDS

  -RADIOLOGICAL
  -TOXICOLOGICAL

- CHARACTERIZE RISK THROUGH INTEGRATED SAFETY ANALYSIS (NORMAL, OFF-NORMAL & ACCIDENT)

  -IDENTIFY INITIATING EVENT AND SEQUENCE OF EVENTS
  -EVALUATE CONSEQUENCES

- IDENTIFY MEASURES RELIED ON TO PROTECT AGAINST RISK

  -AVAILABILITY (PERFORM WHEN CALLED UPON)
  -RELIABILITY (PERFORM FOR PERIOD NEEDED)

GROUPS E & F
(ENRICHMENT & REACTORS)

- GROUP E DEVELOPED TO ADDRESS FUTURE NEEDS
- GROUP F FOR REACTOR FRESH FUEL PRIOR TO OPERATING LICENSE
- EXISTING LICENSEES ARE NOT IMPACTED BY PROPOSED RULE

INTEGRATED APPROACH FOR AVAILABILITY, RELIABILITY AND DEFENSE IN DEPTH

- ● MANAGEMENT ORGANIZATION
- ● RADIATION PROTECTION
- ● NUCLEAR CRITICALITY PROTECTION
  - o CHEMICAL SAFETY
  - o FIRE PROTECTION
- ● ENVIRONMENTAL MONITORING
- ● CONTAMINATION CONTROL
  - o CONFIGURATION MANAGEMENT
  - o MAINTENANCE, SURVEILLANCE, TESTING & CALIBRATION
  - o QUALITY ASSURANCE
- ● EMERGENCY PLANNING
  - o TRAINING
  - o UNUSUAL OCCURRENCE REPORTING

AUTHORITY FOR NEW PROGRAMS LACKING

- SAFETY PROGRAM DESCRIPTION (INTEGRATED SAFETY ANALYSIS)
- TOXICOLOGICAL PROTECTION
  - -CHEMICAL PROCESS SAFETY
- FIRE PROTECTION
  - -FIRE HAZARD ANALYSIS
- MANAGEMENT CONTROLS AND OVERSIGHT
- CONFIGURATION MANAGEMENT
- QUALITY ASSURANCE
- MAINTENANCE, SURVEILLANCE, TEST & CALIBRATION
- PERFORMANCE TRAINING
- NUCLEAR CRITICALITY SAFETY REPORTING

REGULATORY IMPACT ANALYSIS

- CURRENTLY UNDER DEVELOPMENT

MILESTONES

- CRGR BRIEFING
- MEET WITH INDUSTRY TO OBTAIN RULEMAKING VIEWS
- CONSIDER ALTERNATIVES TO ACHIEVE OBJECTIVES OF RULEMAKING
- COMMISSION PAPER ON ALTERNATIVE APPROACHES
- PROCEED WITH COMMISSION DIRECTION

Attachment 3 to the Minutes of CRGR Meeting No. 271

Proposed Final Amendment to 10 CFR50.36 - Codify the Criteria for Defining the Requirements Controlled by Technical Specifications

April 11, 1995

TOPIC

B. Grimes (NRR), C. Grimes (NRR), and N. Gilles (NRR) presented for CRGR review the proposed final amendment to 10 CFR50.36 to codify the four criteria in the Policy Statement on Technical Specifications Improvements for defining the scope of technical specifications. Briefing slides used by the staff in its presentations to the Committee are provided as Attachment 3A.

BACKGROUND

The package provided for review by CRGR was transmitted by memorandum, dated March 29, 1995, F.J. Miraglia to E.L. Jordan. That package contained the following documents:

1. Draft Commission Paper (undated), "Final Rulemaking Package for 10 CFR 50.36", with attachments as follows:

   a. Attachment 1 - Federal Register Notice (undated) [Comparative Text]

   b. Attachment 2 - "CRGR Information", (undated enclosure addressing the provisions of CRGR Charter, Section IV.B.)

   c. Attachment 3 - Letter, dated December 5, 1994, providing NEI comments on proposed amendment

   d. Attachment 4 - Letter, dated December 2, 1994, providing Union Electric comments on proposed amendment

   e. Attachment 5 - Letter, dated December 7, 1994, providing OCRE comments on proposed amendment

CONCLUSIONS/RECOMMENDATIONS

On the basis of its review of the proposed amendment, including the discussions at this meeting, the Committee recommended in favor of going forward with the proposed amendment, subject to several comments and caveats discussed at the meeting, as given below:

1. A principal point of discussion with the staff at the meeting was the manner in which PRA will be used in evaluating safety/risk significance under Criterion 4. On the basis of staff's discussion of the role that PRA results (e.g. licensees' IPE) were intended to play in making the determination to include/exclude items from the technical specifications (TS), the Committee was concerned that the intended role was too restrictive. Specifically, the Committee felt that the suggestion that

PRA results would play only an insignificant role in making such determinations (i.e., beyond identification of the four systems already specifically noted by the Commission) until after the comprehensive guidance being developed in connection with the PRA Implementation Plan is available, is too restrictive. If this is, in fact the intent of the staff, the Committee would not support codification of the proposed criteria (specifically, Criterion 4). The Committee noted that probabilistic analyses have already played a very significant role in a number of proposals brought to CRGR regarding elimination or relaxation of TS surveillance requirements; and such a restrictive interpretation and application of Criterion 4 seems inconsistent with these actions already taken by the staff (and supported, generally, by the Committee). Further, in recognition of the fact that existing plant-specific PRAs/IPEs are the best integrated analyses available for most facilities (particularly where maintained as a living document reflecting the plants current design status), more credit should be given to these studies in assessing the safety/risk significance of plant features. The very restrictive proposed interpretation and planned implementation of Criterion 4 in the current package, as described in the package and elaborated on in the discussion with the Committee at this meeting seems to imply little credit or value to the IPE efforts.

The staff should reexamine the current wording of the package (e.g., at pages 3-4 of the draft Commission Paper; and at pages 15-22 of the draft FRN), and make appropriate modifications to reflect greater emphasis on the intended increased use of PRA (consistent with stated Commission policy) to an extent clearly supported by state-of-the-art PRA, and in a manner that appropriately complements the traditional deterministic approach and does not attempt to supplant the defense-in-depth philosophy that has served well in the safety regulation of nuclear power plants. Specifically, there should not be an implied restriction on the use of PRA under Criterion 4 to such extent that it will, in effect, not be used to identify plant features for TS inclusion/exclusion (beyond the four specifically identified systems) until the planned comprehensive PRA Implementation Guide is available. The Committee believes that existing PRAs/IPEs can be useful in understanding and applying Criterion 4 on a current basis; and, at a minimum, that should be articulated clearly.

2. The staff's intent that the four (proposed) criteria should be used as a "set", not in an exclusive manner (i.e., satisfy Criterion 1 <u>or</u> Criterion 2 <u>or</u> Criterion 3, etc.), to include/exclude items from the TS, was articulated clearly in the discussions with the Committee at this meeting; but this does not come across clearly enough in the current draft package, as written. The staff should reexamine carefully the current wording of the package, and make modifications as appropriate to improve its clarity on this point.

3. The current wording of the first paragraph on page 14 of the draft FRN employs a "double negative" type phrasing to an extent that obscures the intended meaning (i.e., any necessary backfitting determinations will be made in accordance the criteria of 50.109 and existing approved backfit

procedures, in the usual manner, in evaluating and implementing proposed TS amendments under this proposed rule). The staff should develop alternative wording to clarify that intended point here.

BACKFIT AND SAFETY GOAL CONSIDERATIONS

Because proposed TS changes under the new rule would be initiated on a purely voluntary basis by licensees, the proposed action itself does not fall within the scope of 10 CFR 50.109 (although the criteria of that rule may be brought into play in implementing the new proposed rule, as alluded to in 3 above). Accordingly, this action does not require a backfit analysis or evaluation against the Commission's safety goals. Properly implemented, however, the proposed rule will ensure that the safety goals will continue to be met.

Attachment 4 to the Minutes of CRGR Meeting No. 271

Information Briefing on Status of the Action Plan for Fuel Cycle Facilities and the Proposed Major Revision of 10 CFR Part 70

April 11, 1995

TOPIC

R. Burnett (NMSS), L. Ten Eyck (NMSS), and W. Schwink (NMSS) briefed the CRGR on current status of the action Plan for fuel cycle facilities and the proposed major revision of 10 CFR Part 70, with emphasis on the recent redirection of the ongoing effort by the Commission to explore alternative approaches.outlined for the Committee proposed new procedures

Copies of the briefing slides used in the presentation to the Committee are enclosed (Attachment 4A).

BACKGROUND

A. The following background documents were made available to CRGR members in connection with this information briefing:

1. Transcript of Commission Meeting on March 22, 1995 - "Briefing on Status of Action Plan for Fuel Cycle Facilities"

2. SRM, dated 3/22/95, resulting from the NMSS briefing to the Commission on Status of Action Plan for Fuel Cycle Facilities

3. Updated preliminary working draft, dated 3/31/95, of "Revision of 10 CFR Part 70"

4. Draft document (undated), "Regulatory Benefits Impact Analysis" (compares "Rewritten Part 70" to "Existing Part 70", point by point)

5. Draft Revision 2, dated January 1995, to Regulatory Guide 3.52, "Standard Format and Content for the Health and Safety Sections of License Applications for Fuel Cycle Facilities"

6. Draft NUREG-1520, "Standard Review Plan for the Review of a License Application for a Fuel Cycle Facility" (portions dated variously December 1994 through February 1995)

CONCLUSIONS/RECOMMENDATIONS

No formal CRGR recommendations resulted from the discussions with NMSS staff at this meeting; but the Committee offered several preliminary comments and suggestions regarding possible areas of focus in considering alternative approaches as directed by the Commission:

1. It may be useful and practical to concentrate efforts on the "core" sections of the proposed rule that are directed to the large nuclear

materials processing facilities (the so-called C and D Categories of facilities/licensees), and consider separating out that portion of the current overall rulemaking package to be addressed on a priority basis and timeline. It appears that this could simplify the current complex rulemaking package greatly, and would focus staff and licensee resources where the predominant risks are involved. In conjunction with this simplification and streamlining theme, Committee members presented preliminary views, based on a first scan of the extensive Part 70 package elements provided, of specific areas to be reexamined for possible simplification or paring down; the areas focused on initially in this context were the proposed provisions on training, licensee QA programs and event reporting. The Committee will now direct its review efforts to the draft SRP (that is already well developed and provided as a part of the extensive Part 70 revision package) for a better understanding of the planned implementation of these provisions.

With regard to event reporting, specifically, the Committee noted the relatively high incidence of precursor type events for such a small number of facilities involved; and the discussions on this point highlighted the fact that there appear to be important differences in the existing mechanisms for effective sharing of event information and lessons learned among the licensees of the large nuclear material processing facilities, as compared to power reactor licensees, that may indicate a greater safety significance to reporting provisions for the materials licensees (because NRC tends to function more importantly in a clearing house role for this important type of feedback for the large materials facilities).

2. The Committee discussed plans to visit the Westinghouse Columbia fuels facility in May in connection with the Part 70 review; and the information and discussions provided by the NMSS staff at this meeting were useful in identifying areas of focus in the CRGR discussions with the licensee and the planned tour of that facility (e.g., the integrated safety analysis of the facility and its operations currently being performed by the licensee). This will provide valuable insights to CRGR's evaluation of the benefits and costs associated with implementation of that key proposed provision of the current proposed Part 70 revision, and the question of whether the associated schedules prescribed in the proposed rule is realistic.

3. The Committee commended NMSS for a comprehensive, candid and informative briefing on the very complex proposed Part 70 rulemaking, and its understanding and implementation of the Commission's recent directive to consider alternative approaches. In this regard, the Committee was informed that a public meeting has already been arranged with the large materials facilities licensees on May 2 to discuss current thinking and possible proposals in this regard.

UNITED STATES
NUCLEAR REGULATORY COMMISSION
WASHINGTON, D.C. 20555-0001

December 16, 1994

MEMORANDUM TO: James M. Taylor
Executive Director for Operations

FROM: Edward L. Jordan, Chairman
Committee to Review Generic Requirements

SUBJECT: MINUTES OF CRGR MEETING NUMBER 266

The Committee to Review Generic Requirements (CRGR) met on Wednesday, December 7, 1994 from 8:00 a.m. to 12:30 p.m. A list of attendees is provided in Attachment 1. The following item was discussed at the meeting:

1. The CRGR reviewed a final rule to add the standardized NUHOMS horizontal modular storage system to the list of approved spent fuel storage casks in 10 CFR 72.214.

   The CRGR supported the rule subject to:

   a. revision to address a number of CRGR comments; it was agreed that the revisions would be coordinated with the CRGR staff, and

   b. resolution of CRGR questions about the response to Comment N.1 on physical security; it was agreed that the resolution would be circulated to the CRGR members for review.

   This matter is discussed in Attachment 2.

In accordance with the EDO's July 18, 1983 directive concerning "Feedback and Closure of CRGR Review," a written response is required from the cognizant office to report agreement or disagreement with the CRGR recommendations in these minutes. The response is to be forwarded to the CRGR Chairman and if there is disagreement with the CRGR recommendations, to the EDO for decision making.

Questions concerning these meeting minutes should be referred to Dennis P. Allison (415-6835).

Attachments: As stated

cc: Commission (5)
SECY
J. Lieberman, OE
P. Norry, ADM
D. Williams, OIG
K. Cyr, OGC
J. Larkins, ACRS
Office Directors
Regional Administrators, RI/RII/RIII/RIV
CRGR Members

Distribution to CRGR Minutes 266

Central File w/att.
PDR (NRC/CRGR) w/o att.
CRGR SF
CRGR CF
STreby
JMilhoan
MTaylor
REmrit
CPaperiello
CHaughney
BMorris
SBahadur
JConran

December 16, 1994

MEMORANDUM TO: James M. Taylor
Executive Director for Operations

FROM: Edward L. Jordan, Chairman
Committee to Review Generic Requirements

Origin[illegible] Signed
E. L. Jordan

SUBJECT: MINUTES OF CRGR MEETING NUMBER 266

The Committee to Review Generic Requirements (CRGR) met on Wednesday, December 7, 1994 from 8:00 a.m. to 12:30 p.m. A list of attendees is provided in Attachment 1. The following item was discussed at the meeting:

1. The CRGR reviewed a final rule to added the standardized NUHOMS horizontal modular storage system to the list of approved spent fuel storage casks in 10 CFR 72.214.

   The CRGR supported the rule subject to:

   a. revision to address a number of CRGR comments; it was agreed that the revisions would be coordinated with the CRGR staff, and

   b. resolution of CRGR questions about the response to Comment N.1 on physical security; it was agreed that the resolution would be circulated to the CRGR members for review.

   This matter is discussed in Attachment 2.

In accordance with the EDO's July 18, 1983 directive concerning "Feedback and Closure of CRGR Review," a written response is required from the cognizant office to report agreement or disagreement with the CRGR recommendations in these minutes. The response is to be forwarded to the CRGR Chairman and if there is disagreement with the CRGR recommendations, to the EDO for decision making.

Questions concerning these meeting minutes should be referred to Dennis P. Allison (415-6835).

Attachments: As stated

cc: Commission (5)
SECY
J. Lieberman, OE
P. Norry, ADM
D. Williams, OIG
K. Cyr, OGC
J. Larkins, ACRS
Office Directors
Regional Administrators, RI/RII/RIII/RIV
CRGR Members

Distribution: See next page.

DOCUMENT NAME: MINUTES.266

To receive a copy of this document, indicate in the box: "C" = Copy without enclosures "E" = Copy with enclosures "N" = No copy

OFFICE	CRGR/AEOD	E	DD/AEOD	E	C/CRGR/AEOD	C				
NAME	DPAllison		DFRoss		ELJordan					
DATE	12/15/94		12/ /94		12/16/94		12/ /94		12/ /94	

OFFICIAL RECORD COPY

Attachment 1 to the Minutes of CRGR Meeting No. 266

Attendance List

December 7, 1994

CRGR Members

E. Jordan (Chairman)
A. Thadani (for F. Miraglia)
G. Arlotto
J. Murphy
J. Rutberg
W. Kane

CRGR Staff

D. Allison

Other NRC Staff

R. Auluck
W. Reamer
J. Sebrosky
L. Gundrum
E. Shum
G. Gundersen
S. Bahadur
B. Morris
C. Paperiello
M. Raddatz
F. Sturz

Attachment 2 to the Minutes of CRGR Meeting No. 266

Final rule to add the standardized NUHOMS horizontal modular storage system to the list of approved spent fuel storage casks in 10 CFR 72.214.

December 7, 1994

TOPIC

W. Morris and S. Bahadur of RES and F. Sturz and M. Raddatz of NMSS presented the subject rule for CRGR review. The rule would amend 10 CFR 72.214 to add NUHOMS to the list of casks approved for dry storage of spent fuel reactor sites under a general license. Drafts of the associated safety evaluation report and certificate of compliance were previously reviewed at Meeting No. 252.

Copies of the handouts used in the presentation are provided as Attachments A, and B to this attachment.

BACKGROUND

The Federal Register notice containing the final rule was the primary element of the review package. A copy is provided in Attachment C to this attachment.

In addition, the CRGR received copies of the regulatory analysis, the certificate of compliance and the safety evaluation report. Copies of these documents are provided in Attachments D, E and F to this attachment.

CONCLUSION/RECOMMENDATION

The CRGR supported the rule subject to:

1. revision of the package to address a number of CRGR comments; it was agreed that the revisions would be coordinated with the CRGR staff, and

2. resolution of CRGR questions about the response to Comment N.1 on physical security; it was agreed that the resolution would be circulated to the CRGR members for review.

Comments discussed at the meeting include the following.

A. Federal Register notice:

1. Perhaps more emphasis should be placed on the experience that has accumulated with similar casks that are in use under site licenses (rather than a general license).

2. p. 9, say "The staff concluded that design requirements were met in a conservative manner, ensuring that margins of safety ..."

3. p. 10, say "... the licensee must verify ..."

4. p. 10, say "the staff evaluated jamming of the transfer cask while in the spent fuel pool and found it to be unlikely."

5. p. 13, say "The DSC provides containment. The fuel rods/cladding provide confinement of fuel pellets."

6. p. 13, say "design of the transport mechanism and trailer to industry standards is sufficient."

7. p. 16, comment B.4, the response should include sabotage.

8. p. 19, correct and clarify the discussion of corrosion rates.

9. p. 21, comment C-5, the response should address each of the three elements in the comment.

10. p. 22, comment C-6, say "The optical equipment ... is not classified as important to safety because the use of optical equipment is optional; however, the user is required to ensure that cask alignment meets the technical specifications associated with the certificate of compliance."

11. p. 24, say "air flow measurements are not required."

12. p. 26, comment D.4, say that the NRC is not providing the procedures.

13. p. 28, comment D.6, response, say "Daily temperature measures are required to provide additional assurance of the thermal performance ...." and "This requirement was developed and implemented under general license with the first cask..."

14. p. 38, comment F.6, say that flight paths are evaluated.

15. p. 44, comment G.2, say that "A number of commenters wanted a formal trial type public hearings ...."

16. p. 45, comment G.2, say "... the NRC does not intend to hold formal trial type public hearings ..." and "... 10 CFR 2.804 and 2.805, provides full opportunity ... but does not use formal trial type hearings of the kind requested by commenters."

B. Certificate of compliance:

1. Perhaps cask users should be provided some additional flexibility with regard to temperature monitoring upon initial use. For example, it may be acceptable to terminate the special testing at a heat load less than the maximum allowed (24 kW).

C. Safety evaluation report:

1. It should be made clear that individual design basis events, such as earthquake and tornado, were evaluated separately; the loads were not combined.

2. The endorsement of ACI-349-85 (in lieu of ACI-349-80 which is currently approved per Regulatory Guide 3.60) should be evaluated. For example, it could be a backfit or a relaxation.

3. Care should be exercised in the use of off-normal vs. normal conditions because the allowable stress limits are very different.

STAFF BRIEFING TO CRGR

ON

10 CFR PART 72

Addition of the Standardized NUHOMS Modular System
to the List of Approved Spent Fuel Storage Casks

BY

Office of Nuclear Regulatory Research and
Office of Nuclear Material Safety and Safeguards

December 7, 1994

Contacts: S. Bahadur - 415-6238
F. Sturz - 415-7278

Attachment A
to Attachment 2
Meeting 266

BACKGROUND

- PRESENTED DRAFT SER AND DRAFT CERTIFICATE OF COMPLIANCE TO CRGR ON NOVEMBER 23, 1993.
- REVISED BOTH DOCUMENTS IN RESPONSE TO THE CONCERNS RAISED BY CRGR.
- PUBLISHED A PROPOSED RULEMAKING ON JUNE 2, 1994, FOR A 75-DAY PUBLIC COMMENT PERIOD. EXTENDED COMMENT PERIOD FOR ANOTHER 6 WEEKS.
- RECEIVED 239 COMMENTS IN 27 LETTERS WITH ONE SUPPLEMENT. OHIO DEPARTMENT OF HEALTH APOLOGIZED AND WITHDREW ITS COMMENTS.
- INCORPORATED PUBLIC COMMENTS. SUBMITTED DRAFT FINAL RULEMAKING FOR CRGR REVIEW ON DECEMBER 2, 1994. FORWARDED COPIES TO TECHNICAL EDITOR AND VARIOUS OFFICES FOR CONCURRENCE.

SUMMARY OF PUBLIC COMMENTS

- HLW POLICY QUESTIONS, DOE, REPOSITORY
  - ENVIRONMENTAL - EIS

- DESIGN, ANALYSES, CONSTRUCTION, INSPECTION OF STANDARDIZED NUHOMS
  - TIPOVER OR SLIDING ON PAD
  - DROP OF DSC IN TRANSFER CASK
  - CORROSION OF DSC
  - NOT REQUIRED TO HAVE TRANSFER CASK ON SITE AT ALL TIMES, IT CAN BE LEASED FROM VECTRA
  - SIMILAR DESIGNS IN USE AT OCONEE AND CALVERT CLIFFS

- DAVIS-BESSE SITE SPECIFIC
  - CONSTRUCTED ON FLOOD PLAIN
  - CONTAMINATION OF WATER TABLE
  - SEISMIC
  - EIS
  - HEARING

- APPLICATION OF 10 CFR 72.48 TO VENDORS AND GENERAL LICENSEES
  - SIMILAR TO 10 CFR 50.59
  - PREVIOUSLY APPLIED TO SITE-SPECIFIC LICENSE
  - SIMILAR LANGUAGE IN CERTIFICATE OF COMPLIANCE, FIRST TIME FOR APPROVED CASK LISTED IN 10 CFR 72.214

CHANGES TO SER AND CERTIFICATE OF COMPLIANCE

- NO CHANGES TO NUHOMS DESIGN.
- NO MAJOR CHANGE ON TECHNICAL SPECIFICATIONS.
  - MINOR EDITORIAL CHANGES AND REPORTING PROCEDURES BASED ON PUBLIC COMMENTS AND NRC REVIEW.
  - AVERAGE AMBIENT TEMPERATURE REQUIREMENT MOVED TO SPECIFICATION 1.1.1, ITEM 2.
  - 30-DAY PERIOD ADDED FOR SPECIFICATIONS REQUIRING LETTER REPORT IN THE ACTION STATEMENT.
  - DECONTAMINATION OF THE TRANSFER CASK ADDED TO THE MAXIMUM DSC REMOVABLE SURFACE CONTAMINATION SPECIFICATION.
- DSC CORROSION EVALUATION SECTION ADDED TO THE SER BASED ON PUBLIC COMMENTS.
- SI UNITS INCLUDED IN SER.

FUTURE ACTION

- SUBMIT THE PACKAGE FOR EDO APPROVAL LATEST BY DECEMBER 13, 1994.
- PUBLISH FINAL RULE BY DECEMBER 23, 1994, WITH A 30-DAY IMPLEMENTATION PERIOD.
- ACCELERATED SCHEDULE IS FOLLOWED TO ALLOW DAVIS-BESSE NUCLEAR POWER STATION BEGIN FABRICATION OF DRY CASK CANISTER BY JANUARY 26, 1995, TO MEET THE AUGUST 1995 LOADING DATE.

CENTERIOR ENERGY

6200 Oak Tree Boulevard
Independence OH
216-447-3153
Fax 216-447-3123

Mail Address:
P.O. Box 94661
Cleveland, OH 44101-4661

Donald C. Shelton
Senior Vice President
Nuclear

Docket Number 50-346

License Number NPF-3

Serial Number 2262

November 28, 1994

Mr. James M. Taylor
Executive Director for Operations
United States Nuclear Regulatory Commission
Document Control Desk
Washington, D. C. 20555

Subject: Approval of NUHOMS Dry Fuel Storage System for General License Use

Dear Mr. Taylor:

I am writing to you concerning the schedule for certification of the NUHOMS dry fuel storage system which is to be used at the Davis-Besse Nuclear Power Station (DBNPS) next year. In a letter dated August 25, 1993, we informed the Nuclear Regulatory Commission (NRC) staff that the NUHOMS system had been selected for use at the DBNPS commencing in mid-1995. When the NUHOMS system was selected in March of 1993, NRC issuance of the Certificate of Compliance was anticipated in late 1993 or early 1994 based on discussions with the Office of Nuclear Material Safety and Safeguards (NMSS). However, slippage of the NRC certification schedule is now jeopardizing our schedule for loading the first NUHOMS module in August 1995. Our schedule requires the final rule certifying the NUHOMS system to be published in the Federal Register no later than December 27, 1994 or seek an exemption to allow canister fabrication to begin in January 1995.

The August 1995 schedule for loading the first NUHOMS modules at the DBNPS was selected to preserve full core reserve in the spent fuel pool, to not interfere with the schedule for new fuel receipt, and to allow sufficient time to complete the loading activities before the onset of inclement winter weather. Full core reserve will be lost in the DBNPS spent fuel pool during the Tenth Refueling Outage (10RFO) which is scheduled to begin in April, 1996.

The fabrication schedule for the NUHOMS components has already been compressed to the minimum. Dry Storage Canister (DSC) fabrication must begin by January 26, 1995 to meet the August 1995 loading date.

Attachment B
to Attachment 2
Meeting 266

Given that the NRC staff is unlikely to complete the rulemaking by December 27, 1994, the only option is to direct VECTRA to seek an exemption from 10 CFR72.234(c) to permit DSC fabrication to support the fuel loading schedule. An exemption places additional burden on the NRC staff and will potentially subject both the NRC and TE to unnecessary criticism and adverse publicity.

I request that you establish a firm schedule that will result in completion of the rulemaking by January 26, 1995 and commit the necessary NRC resources to support the exemption request if the rulemaking is not final by that date.

Sincerely yours,

WTO/eld

cc: L. L. Gundrum, NRC Project Manager
J. B. Martin, Regional Administrator, NRC Region III
S. Stasek, DB-1 NRC Senior Resident Inspector
Utility Radiological Safety Board

[7590-01]

NUCLEAR REGULATORY COMMISSION

10 CFR Part 72

RIN 3150-AF02

List of Approved Spent Fuel Storage Casks: Addition

AGENCY: Nuclear Regulatory Commission.

ACTION: Final rule.

SUMMARY: The Nuclear Regulatory Commission (NRC) is amending its regulations to add the Standardized NUHOMS Horizontal Modular System to the List of Approved Spent Fuel Storage Casks. This amendment will allow holders of power reactor operating licenses to store spent fuel in this approved cask under a general license.

EFFECTIVE DATE: (30 days from date of publication in the Federal Register)

ADDRESSES: Copies of the environmental assessment and finding of no significant impact are available for inspection and/or copying for a fee at the NRC Public Document Room, 2120 L Street, NW. (Lower Level), Washington, DC. Single copies of the environmental assessment and the finding of no significant impact are available from the individuals listed under the next heading below.

Attachment C
to Attachment 2
Meeting 266

FOR FURTHER INFORMATION CONTACT: Mr. Gordon E. Gundersen, Office of Nuclear Regulatory Research, U.S. Nuclear Regulatory Commission, Washington, DC 20555, telephone (301) 415-6195, or Dr. Edward Y. S. Shum, Office of Nuclear Material Safety and Safeguards, U.S. Nuclear Regulatory Commission, Washington DC 20555, telephone (301) 415-7903.

SUPPLEMENTARY INFORMATION:

Background

Section 218(a) of the Nuclear Waste Policy Act of 1982 (NWPA) includes the following directive: "The Secretary [of DOE] shall establish a demonstration program in cooperation with the private sector, for the dry storage of spent nuclear fuel at civilian nuclear reactor power sites, with the objective of establishing one or more technologies that the [Nuclear Regulatory] Commission may, by rule, approve for use at the sites of civilian nuclear power reactors without, to the maximum extent practicable, the need for additional site-specific approvals by the Commission." After subsequent DOE technical evaluations and based on a full review of all available data, the Commission approved dry storage of spent nuclear fuel in a final rule published in the Federal Register on July 18, 1990 (55 FR 29181). The final rule established a new Subpart K within 10 CFR Part 72 entitled "General License for Storage of Spent Fuel at Power Reactor Sites."

Irradiated reactor fuel has been handled under dry conditions since the mid-1940's when irradiated fuel examinations began in hot cells. Light water reactor fuel has been examined dry, in hot cells since approximately 1960.

Some of these fuels have been stored continuously at hot cells under dry conditions for approximately two decades. Experience with storage of spent fuel in dry casks is extensive. (54 FR 19379 (1990)). Further, as discussed below the United States has extensive experience in the licensing and safe operation of independent spent fuel storage installations (ISFSI's). By the end of 1994 six site-specific licenses for dry cask storage will have been issued. They are: Virginia Power's Surry Station, issued July 2, 1986; Carolina Power and Light"s (CP&L) HB Robinson Station, issued August 13, 1986; Duke Power's Oconee Station, issued January 29, 1990; Public Service of Colorado's Fort St. Vrain facility, issued November 4, 1991; Baltimore Gas and Electric's (BG&E) Calvert Cliffs Station, issued November 25, 1992; and Northern States Power's (NSP) Prairie Island Nuclear Generating Plant, issued October 19, 1993. All except NSP have commenced operation and loaded fuel. As of the end of 1994, these utilities have dry storage spent fuel inventories of approximately, 500 assemblies at Virginia Power, 60 assemblies at CP&L, 530 assemblies at Duke Power, 1480 fuel elements at Public Service of Colorado; 190 assemblies at BG&E; and NSP plans to store soon.

In May 1993, Consumers Power's Palisades Station commenced operation and loaded fuel under the provisions of the general license in 10 CFR Part 72, Subpart K. As of the end of 1994, approximately 168 assemblies are stored at Palisades.

As a result of the growing use of dry storage technology, NRC has gained over 35 staff years of experience in the review and licensing of dry spent fuel storage systems. To further support the NRC technical staff, the agency draws upon the knowledge and experience of outside scientist and engineers recognized as experts within their respective fields in the performance of the

independent safety analysis of the system and component designs submitted by applicants for dry cask licenses or certification. Reviews of numerous applications, seeking either site-specific licenses, certificates of compliance or approvals of topical reports, have been conducted over the past eight years.

More recently, the NRC published a notice of proposed rulemaking in the Federal Register on June 2, 1994 (59 FR 28496) which proposed to amend 10 CFR 72.214 to include one additional spent fuel storage cask (i.e., the VECTRA Technologies, Inc., Standardized NUHOMS Horizontal Modular Storage System) on the list of approved spent fuel storage casks that power reactor licensees may use under the provisions of a general license issued by NRC in accordance with 10 CFR Part 72, Subpart K. The Standardized NUHOMS consists of two systems: (1) The NUHOMS-24P holds 24 specified pressurized water reactor spent fuel assemblies and; (2) The NUHOMS-52B holds 52 specified boiling water reactor spent fuel assemblies.

Subsequent to the expiration of the 75-day public comment period on August 16, 1994, NRC received a request, dated August 11, 1994, for a 6-week extension of the comment period from Connie Kline of the Sierra Club on behalf of 12 citizen groups. The extension request asserted that several proprietary documents related to this rulemaking were not available to the public for approximately 2 weeks at the beginning of the comment period. The NRC granted the request on August 29, 1994 (59 FR 44381) by extending the public comment period to September 30, 1994.

VECTRA Technologies, Inc. (formerly Pacific Nuclear Fuel Services, Inc.) submitted to the NRC, a Safety Analysis Report (SAR) entitled "Safety Analysis Report for the Standardized NUHOMS Horizontal Modular Storage System for

Irradiated Nuclear Fuel," NUH-003, Revision 2, dated November 1993. Subsequently, it provided additional information to the NRC related to the SAR. In March 1994, the NRC issued a draft Safety Evaluation Report (SER) entitled "Safety Evaluation Report of Pacific Nuclear Fuel Services, Inc. Safety Analysis Report for the Standardized NUHOMS Horizontal Storage System for Irradiated Nuclear Fuel" approving the SAR. The NRC issued a draft Certificate of Compliance by letter to Mr. Robert D. Quinn from Mr. Frederick C. Sturz dated April 28, 1994. These documents are part of the docket and record that support the notice of proposed rulemaking published in the Federal Register on June 2, 1994.

The objective of 10 CFR Part 72 is to protect the public health and safety by providing for the safe confinement of the stored fuel and preventing the degradation of the fuel cladding. The review criteria used by the NRC for review and approval of dry cask storage under 10 CFR Part 72 consider the following factors: siting, design, quality assurance, emergency planning, training, and physical protection of the fuel. Included in the review of a specific system, either for a certificate of compliance or a site-specific license, are the following phenomena: earthquakes, high winds, tornados, tornado driven missiles, lightning, and floods. In addition, applicants must demonstrate to NRC's satisfaction that their proposed dry cask system will resist man-made events such as explosions, fire, and drop or tipover accidents.[1]

Based on further staff review and analysis of public comments, both the SER and Certificate of Compliance for the Standardized NUHOMS were modified.

---

[1]The design bases for these events and accidents are contained within 10 CFR Part 72.

Section M contains a description of changes to the SER and Certificate of Compliance in response to public comments. The NRC finds that the Standardized NUHOMS, as designed and when fabricated and used in accordance with the conditions specified in its Certificate of Compliance, meets the requirements of 10 CFR Part 72. Thus, use of the Standardized NUHOMS, as approved by the NRC, will provide adequate protection of the public health and safety and the environment. With this rulemaking, NRC is approving the use of the Standardized NUHOMS under the general license in 10 CFR Part 72, Subpart K, by holders of power reactor operating licenses under 10 CFR Part 50. Simultaneously, NRC is issuing a final Certificate of Compliance to be effective on (30 days from date of publication in the Federal Register). A copy of the Certificate of Compliance is available for public inspection and copying for a fee at the NRC Public Document Room, 2120 L Street, NW. (Lower Level), Washington, DC.

Public Responses

In response to the proposed addition of the Standardized NUHOMS, 239 comments in 27 letters with one supplement were received from individuals, public interest groups, an environmental group, an association, industry representatives, a City, States, and one Federal Agency. Many of these letters contained similar comments, which have been grouped together and addressed as a single issue. All comments have been grouped into 15 broad issues designated A though O. For each broad issue included herein is a summary of the comments and an NRC analysis and response to those comments. The NRC has identified and responded to 89 separate issues that include the

significant points raised by each commenter.

Public comment letters on the proposed rule are available for public inspection and copying for a fee at the Commissions Public Document Room.

A number of comments related to disposal of high-level waste and the use of dry cask storage technology in general. Examples of these comments include:

-The Federal government's failure to resolve questions about the permanent storage of nuclear wastes leaves both the plant and public with limited options: additional storage in pools, additional storage in dry casks or plant shutdown. The Federal government has an obligation to resolve the issue of permanent or interim storage. It would be difficult to overstate the need for dispatch in doing so, as hundreds of American communities will eventually face this problem.

-It is not fair to the public of Ohio to link Toledo Edison Company's attempts to continue the safe storage of its nuclear fuel with insistence by others that we shut down Davis-Besse and every other nuclear plant in the country.

-Only dry storage casks that are compatible with future Department of Energy (DOE) interim or permanent storage operation, including transportation, should be approved for use under the general license and listed in 10 CFR 72.214.

These comments deal with broad policy and program issues relating to the storage and disposal of high-level radioactive waste including the Department of Energy's repository program. However, commenters will find a summary of relevant information on many of these broad issues in Group G. Many comments

were directed at the Standardized NUHOMS-24P with only a few comments being specific to the Standardized NUHOMS-52B.

Many commenters discussed topics that were not the subject of this rulemaking and thus were not specifically addressed by the staff as a part of this final rulemaking action. These comments express opposition to the use of dry cask storage and included suggestions such as the following:

(1) nuclear plants generating radioactive waste should be shut down;

(2) the production of radioactive waste should be stopped when the existing spent fuel pool (and off-load-reactor capacity) is full;

(3) a formal hearing should be required at each site using dry storage casks;

(4) the Davis-Besse plant should be shut down;

(5) the use of nuclear power should be stopped and existing sites cleaned up;

(6) the problems Palisades experienced in using the VSC-24 cask;

(7) alternative forms of power should be used;

Finally, many commenters expressed concern over the ability of dry cask storage designs, presumably including the Standardized NUHOMS, to safely store spent fuel. The following responses to these comments reflect a small but important portion of the NRC's review of health, safety, and environmental aspects of the Standardized NUHOMS, to ensure that the cask is designed to provide protection of the public health and safety and environment under both normal conditions and severe, unlikely, but credible accident conditions. Dry cask storage systems are massive devices, designed and analyzed to provide shielding from direct exposure to radiation, confine the spent fuel in a safe storage condition, and prevent releases of radiation to the environment. They

are designed to perform these tasks relying on passive heat removal and confinement systems without moving parts and with minimal reliance on human intervention to safely fulfill their function for the term of storage. The designs include margins of safety under both normal and accident conditions to provide additional assurance of protection for the public health and safety, the common defense and security, and the environment.

Analysis of Public Comment

A. A number of commenters raised issues relating to cask handling and the ability of the cask to withstand drop and tipover accidents.

A.1. Comment. Several commenters wanted the transfer cask containing the Dry Storage Canister (DSC) to be analyzed for the maximum possible drop, regardless of whether that drop can occur inside or outside the spent fuel building. One commenter alleged that a drop of the transfer cask into the spent fuel pool would damage fuel assemblies in the pool. Another commenter was concerned about jamming the transfer cask in the spent fuel pool. What would happen to the cask if jammed fuel could not be extricated? Would the entire 40 ton transfer cask be left in the fuel pool?

Response. Use of the Standardized NUHOMS inside the fuel handling building would be conducted in accordance with the 10 CFR Part 50 reactor operating license. These cask handling operations, including loading, retrieval, and training must be evaluated by the general licensee, as required by 10 CFR 72.212(b)(4), to ensure that procedures are clear and can be conducted safely. Load handling activities and possible load drop events and

structural and radiological consequences related to transfer cask drops inside the spent fuel building are subject to the provisions of 10 CFR 50.59. Thus, the licensee must determine whether the activities involve any unreviewed facility safety question or change in facility technical specifications. The transfer cask and DSC designs were evaluated by the NRC against the criteria for controlling heavy loads found in NRC publication NUREG-0612 ("Control of Heavy Loads at Nuclear Power Plants") and American National Standards Institute (ANSI) N14.6, "Special Lifting Devices for Shipping Containers Weighing 10,000 Pounds or More." The lifting yoke associated with the transfer cask is a special purpose device designed to ANSI N14.6 criteria to ensure that the yoke can safely lift the wet transfer cask containing the DSC out of the spent fuel pool and can safely lift the dry transfer cask and DSC to the transport trailer. Pursuant to 10 CFR 50.59, for those reactor plants with a shipping cask drop analysis, the facility staff must verify that the shipping cask drop analysis adequately describes the consequences of a postulated transfer cask drop and that no unreviewed safety question exists. For those reactor plants that may lack a shipping cask drop analysis, the facility staffs must perform a transfer cask drop analysis pursuant to 10 CFR 50.59.

Specific requirements for lifting heavy loads are contained in the Certificate of Compliance and SER. These include: The possibility of jamming a transfer cask while in the spent fuel pool is highly unlikely. In most reactor plants, the cask loading pit is generally separate from the spent fuel pool, and the cask is prevented from traveling over the spent fuel pool by controls on the bridge crane. Therefore, the transfer cask could not become jammed while in the spent fuel pool.

A.2. Comment. One commenter asked why the transfer cask with the DSC can be lifted to 80 inches outside the spent fuel pool building when it has to be unloaded and inspected for damage if it drops from above 15 inches. Why not limit the height to 15 inches?

Response. The transfer cask with the DSC rides on the transport trailer at a height of greater than 15 inches, and therefore, was analyzed for a drop from that height (80 inches). A drop from a height between 15 and 80 inches does not pose a public health and safety hazard. However, to ensure safety the NRC requires the DSC to be unloaded and inspected for damage.

A.3. Comment. One commenter asked what was the tip over analysis or drop analysis result.

Response. The tipover, end drops, and horizontal drop analyses form part of the structural design basis for the Standardized NUHOMS design. The designer, VECTRA, described these drop and tipover analyses in SAR, Section 8.2.5. The NRC's evaluation of the vendor's analyses is described in SER, Section 3.2.2.3E. The NRC found the results of these analyses to be satisfactory, because the calculated stresses were all within the allowable criteria of the American Society of Mechanical Engineers (ASME) Code.

A.4. Comment. Several commenters, citing Section 1.1.1 of the draft Certificate of Compliance, requested the postulated cask drop accident in the plant fuel handling area to be included in the list of parameters and analyses that will need verification by the system user (10 CFR 50.59 safety evaluation).

Response. As stated in Section 1.1.1 of the draft Certificate of Compliance, a holder of a 10 CFR Part 50 license, the user, before use of the general license under 10 CFR Part 72, must determine whether activities

related to storage of spent fuel involve any unreviewed facility safety issues, or changes in facility technical specifications as provided under 10 CFR 50.59. Fuel handling, including the possible drop of a spent fuel cask, would be among the activities required to be verified. Fuel handling which includes spent fuels and fresh fuels are routine operations within the nuclear power plant that are subject to NRC regulation under 10 CFR Part 50. A holder of a 10 CFR Part 50 license is required to establish operating procedures for spent fuel handling and provide emergency planning to address a potential cask drop accident in the reactor's fuel handling area (Certificate of Compliance, Section 1.1.4). Therefore, the NRC considers it is already clear that the spent fuel operation in the nuclear power plant should be evaluated to verify that the possible drop of a spent fuel cask does not raise an unreviewed safety issue or require a facility technical specification change appropriately regulated under 10 CFR Part 50.

A.5. Comment. One commenter stated that there is no place to unload the spent fuel in the event of a canister breach. There is no indication that the canister, the canister lifting mechanism or transport mechanism to move the canister into the cask are nuclear grade equipment or have been designed to prevent a single failure from breaching the canister, thereby circumventing the protection provided by the sole barrier provided by the canister wall itself.

Response. 10 CFR 72.122(1) provides that storage systems must be designed to allow ready retrieval of the spent fuel in storage. A general licensee using an NRC approved cask must maintain the capability to unload a cask. Typically, this will be done by maintaining the capability to unload a cask in the reactor fuel pool. In addition, other options are under

development that would permit unloading a cask outside the reactor pool. With respect to canister equipment and design, the DSC, or canister, is designed to the ASME Boiler and Pressure Vessel Code (BPVC), Section III, Subsection NB. In the unlikely event of a breech that required the canister to be unloaded, the canister can be returned to the reactor spent fuel pool. Therefore, it is not correct that there is not place to unload a canister. In addition, other options are under development that would permit unloading a canister outside the reactor pool. The DSC is considered to provide a secondary confinement barrier and the cladding of the fuel rods provide primary confinement. Only intact fuel assemblies with no gross damage are permitted to be stored under the rules of 10 CFR Part 72. The Horizontal Storage Module (HSM) is designed to American Concrete Institute (ACI) 349, which is the required code for nuclear structures made of reinforced concrete. The transfer cask is designed according to the ASME BPVC, Section III, Subsection NC; ANSI-N14.6 for heavy loads; ANSI-50.9 for load combinations; and NUREG/CR 1815 for impact testing. Because the cask itself is required to meet such exacting standards of construction, the transport mechanism and the trailer which are necessary to move the canister into the HSM are not considered to be important to safety. Therefore, they do not need to be designed to meet nuclear grade equipment standards.

B. A number of commenters raised issues relating to releases of radioactivity from surface contamination and leakage from the casks under normal and accident conditions.

B.1. Comment. One commenter pointed out Certificate of Compliance Surveillance Requirement 1.2.12 does not have a section stating what action is

to be taken when contamination level in the transfer cask exceed limits after the DSC has been transferred to the concrete HSM.

Response. The Certificate of Compliance Surveillance Requirement in Section 1.2.12 has been modified to clarify that decontamination of the transfer cask is required if the surface contamination limit is exceeded.

B.2. Comment. One commenter concerned with the seismic events at the Davis-Besse Nuclear Power Station stated that a displacement pulse of 60 cm., as observed in the Lander's quake in the Mojave Desert northeast of Los Angeles, would completely destroy the HSM and allow a substantial release of radioactivity from the fuel within.

Response. The potential for a seismic event is not the same at every reactor site in the United States. For Davis-Besse, the maximum ground displacement has been calculated to be 3.33 inches corresponding to a 0.15g maximum ground acceleration. This is substantially less than the displacement observed in the Lander's quake and appears to be well within the design of the Standardized NUHOMS. Each general licensee using the Standardized NUHOMS, including Davis-Besse, is required to document their evaluation to determine that the reactor site parameters, including seismic events, envelope the cask design basis, as specified in its SAR and SER.

B.3. Comment. One commenter, citing a Wisconsin Public Service Commission draft environmental impact statement (EIS) for Point Beach, asked for an explanation of why NUHOMS and metal casks have a greater potential to spread contamination than the Pacific Sierra Nuclear Associates ventilated storage cask (VSC) system, VSC-24 cask.

Response. The specific rationale that forms the basis of the statement in the Wisconsin Public Service Commission's draft EIS for Point

Beach was not documented. The decontamination requirements for the two designs are comparable. The VSC-24 DSC is loaded into the ventilated concrete cask (VCC) forming the VSC. The VSC is then transported from inside the reactor auxiliary building to the storage pad. During the movement and storage of the VCC, the exterior surface remains clean having not been exposed to contamination in the spent fuel pool. The NUHOMS DSC is moved in the transfer cask from the reactor building to the horizontal storage module in the field. Because, the transfer cask has been in the spent fuel pool, it may have small amounts of external contamination which have the potential to spread during transit. However, any such potential contamination could not be significant. NRC requires that the surface contamination, worker's dose, and environmental dose limits must all be met for the operation of the ISFSI including during any transfer operations. Each 10 CFR Part 50 licensee must have a radiation protection program to monitor operations to ensure that surface contamination and worker and public exposure to radiation are below acceptable levels and as low as is reasonably achievable (ALARA). Past operation of the NUHOMS shows that the doses are well below all NRC limits.

B.4. Comment. One commenter "is concerned that heat generated by fission product decay may provide the driving force, the presence of free moisture in water-logged fuel may, in a non-mechanistic way, provide a transport mechanism for fission product release and the ambient air circulating through the cask concrete structure may provide (an unmonitored) pathway to the biosphere." One commenter remained concerned about the possibility of insufficient drying of the fuel before placement in the DSC. Another commenter, citing Battelle Pacific Northwest Laboratory Report PNL-5987 on the removal of moisture from degraded fuel during vacuum drying,

contends that the mechanism for free moisture and radionuclide release that pertain in normal or upset conditions, such as caused by sabotage, have not been simulated adequately.

Response. The DSC is a closed vessel. There is no path available for release of fission products from inside the DSC to the atmosphere. During normal operation, the circulating air, as it passes through the HSM and around the outside of the DSC to remove the heat, never comes in contact with and therefore, could not remove fission products from the cavity of the DSC. Moreover, design basis accidents under upset conditions were postulated and analyzed in the SAR and SER. These analyses show that the heat generated from fission product decay is not capable of breeching the DSC and therefore, could not provide the driving force for a release of radioactivity. Further, it is not expected that any significant amount of moisture will remain in the fuel after it is loaded in to the DSC. The fuel is dried after it has been loaded into the DSC and the topcover plate seal welded to the DSC shell. The Certificate of Compliance requires two pump-downs to a vacuum pressure of less than 3mm Hg each with a holding time of greater than 30 minutes. A stable vacuum pressure of less than 3mm Hg indicates that all liquid water has evaporated in the DSC cavity.

C. A number of comments were received that focused on monitoring, surveillance, and inspection activities associated with dry cask storage of spent fuel, particularly as they relate to the Standardized NUHOMS.

C.1. Comment. One commenter stated that there are neither active nor passive systems in place to mitigate barrier breaches, nor are there active radiation monitors that would indicate a breach has occurred. There are no

monitored drains and sumps nor are there retention basins. The commenter stated the cask is insufficient to be relied upon for the health and safety of Ohioans.

Response. The Certificate of Compliance (Section 1.3) for the Standardized NUHOMS includes surveillance and monitoring requirements that are more than sufficient to detect cask degradation in time to assure that adequate corrective actions can and will be taken. In addition, radiation monitoring and environmental monitoring programs would detect any radiation leak in excess of NRC limits from an NRC approved cask.

The NRC has in some instances required continuous monitoring where it believes continuous monitoring is needed to determine when a corrective action needs to be taken. To date, under the general license, the NRC has accepted continuous pressure monitoring of the inert helium atmosphere as an indicator of acceptable performance of mechanical closure seals for dry spent fuel storage casks.

However, the NRC does not consider such continuous monitoring for the Standardized NUHOMS double-weld seals to be necessary because: (1) there are no known long-term degradation mechanisms which would cause the seal to fail within the design life of the DSC and (2) the possibility of corrosion has been included in the design (see SER Section 3.2.2.5). These conditions ensure that the internal helium atmosphere will remain. Therefore, an individual continuous monitoring device for each HSM is not necessary. However, the NRC considers that other forms of monitoring casks including periodic surveillance, inspection and survey requirements, and application of preexisting radiological environmental monitoring programs of 10 CFR Part 50 licensee during the period of use of the canisters with seal weld closures can

adequately satisfy NRC requirements.

With respect to the issue of instrumentation and control systems to monitor systems which are important to safety, the user of the Standardized NUHOMS will, as provided in Chapter 14 of the SER and in Section 1.3.2 of the Certificate of Compliance, be required to verify by a temperature measurement, the cask thermal performance on a daily basis to identify conditions which threaten to approach cask design temperature criteria. The cask user will also be required to conduct a daily visual surveillance of the cask air inlets and outlets as required by Chapter 14 of the SER and Section 1.3.1 of the Certificate of Compliance.

While the HSM and DSC are considered components important to safety, they are not considered operating systems in the same sense as spent fuel pool cooling water systems or ventilation systems which may require other instrumentation and control systems to ensure proper functioning. Hence, due to this passive design, temperature monitoring and surveillance activities are appropriate and sufficient for this design, to assure adequate protection of the public health and safety.

Since the Standardized NUHOMS DSC is a welded closed vessel which has been decontaminated prior to being placed in a HSM, there is no routine radioactive liquid generation that would require a retention basin or sump. Water entering the storage area has no mechanism of becoming contaminated, since the DSC is enclosed within the HSM and is expected to be dried by the heat generated during storage.

C.2. Comment. One commenter expressed concern over the possible external corrosion of the stainless steel DSC because of exposure to water over decades. Another commenter expressed concern about corrosion of

stainless steel under conditions of indefinite duration. While stainless steel corrodes less rapidly than carbon steel, even the plumbing fixture industry is finding unexpected stainless steel pitting and corrosion under conditions far less intense than those in a DSC. Another commenter stated that the system is not designed for remote inspection of the DSC for corrosion while it is in the HSM and that the only way to inspect the DSC is to return it to the spent fuel pool. Periodic inspection of the DSC is needed to preclude unidentified gradual canister deterioration by unknown mechanisms. Another commenter inquired about a checking system for the NUHOMS in the future. How will corrosion be evaluated on the canister (DSC) and the support rails inside the HSM? Is it possible for them to accumulate moisture and corrode together over the possible many years of storage? What check is required on this possibility that the canister couldn't be removed at the end of cask life?

Response. The DSC is enclosed within the HSM and is not exposed to external water. Laboratory experiments have indicated for similar stainless steels a general corrosion rate of less than 0.001 inches per year. The NRC believes these experiments more accurately bound DSC corrosion than experiences in unrelated industries. For a 50-year design life of the DSC, the expected corrosion would therefore not result in exceeding a corrosion depth of 0.0025 inches. This will not affect the DSC from performing its intended safety functions. Because of the low corrosion rates expected for stainless steel, periodic inspections for deterioration of the DSC are not deemed necessary, therefore, not required. It should be noted that the support rails for the DSC have an extremely hard alloy steel applied to the sliding surface, are ground to a smooth finish, and are coated with a dry film

lubricant to prevent corrosion and to reduce the coefficient of friction. Furthermore, as indicated above, the environment inside the HSM is protected from rain; it is also kept dry due to the heat load from the DSC. Therefore, it is highly unlikely that corrosion between the stainless steel and the hard alloy steel surface of the support rail will occur to any significant extent. These conclusions and analyses regarding the very small likelihood of corrosion indicate that there is reasonable assurance that the DSC can be removed from the HSM when required.

C.3. Comment. One commenter questioned whether the screens between the casks, which are essential to cooling, will remain clear of debris and how they can be cleaned if they become partially clogged. Another commenter was concerned how the roof screen was inspected. It seems likely that insects, animals, and birds will be attracted to the warm air coming from the outlet vents. Several commenters remained concerned about vent blockage particularly from insects such as paper wasps which build huge nests and swarms of midges common to the Great Lakes which can completely cover and block screening and vents. How are the screens attached?

Response. As stated in the Certificate of Compliance, a licensee using the Standardized NUHOMS must conduct a daily visual surveillance of the exterior of air inlets and outlets (front wall and roof bird screen). In addition, the licensee must perform a daily close-up inspection to ensure no material accumulates between the modules to block the air flow. If the surveillance shows blockage of air vents, the licensee is required to clear the vent blockage by following procedures developed by each user of the Standardized NUHOMS. If the screen is damaged, the licensee must replace the screen. The required daily surveillance and temperature measurements should

readily detect blockage of the vents or screens by insects, animals, or birds in a timely manner so as to lead to the removal of the obstruction before damage occurs due to high temperatures. The bird screen is made of stainless steel wire cloth tack welded to stainless steel strips which are attached to the HSM with stainless steel wedge anchors.

C.4. Comment. One commenter expressed concern about the presence of burrowing and other nuisance animals that have posed problems at other waste sites.

Response. Burrowing and other nuisance animals are not expected to pose problems for the Standardized NUHOMS. Because of the robust system design, animals will not be able to get to the radioactive material or cause damage such that water could cause movement of the radioactive material. Burrowing under the concrete pad would not cause damage to safety related components. Further, large scale burrowing would likely be detected by the daily surveillance or other activities related to the operation of the storage area.

C.5. Comment. One commenter wanted additional radiation monitoring because of the calculated higher dose rates over previous NUHOMS designs. These higher dose rates are not consistent with the objective of maintaining occupational exposures ALARA. Site-specific applications should provide detailed procedures and plans to meet ALARA guidelines and 10 CFR Part 20 requirements with respect to operation and maintenance.

Response. NRC agrees with the comment. For a site-specific application, NRC requires detailed procedures, in compliance with 10 CFR Parts 20, 50, and 72 with ALARA taken into consideration for operation and maintenance of the ISFSI. Additional monitoring, such as installation of

thermoluminescent dosimeters around the ISFSI and monitoring for workers is required.

C.6. Comment. One commenter was concerned about the optical survey equipment used to align the transfer cask with the HSM prior to transfer. What checks are due on this optical equipment and what regulations apply?

Response. The optical equipment, used to align the transfer cask with the HSM is not classified as important to safety. Therefore, no checks are required.

C.7. Comment. One commenter wants to know who evaluates the insertion or retrieval of the DSC for excessive vibration and what is the result of excessive vibration. Wouldn't this allow crud to be released?

Response. The NRC Certificate of Compliance, Section 1.2.9 provides that the cask user shall observe the transfer system during DSC insertion or retrieval to ensure that motion or excessive vibration does not occur. It also prescribes certain follow-up actions to be taken by the cask user in the event that alignment tolerances are exceeded and excessive vibration occurs. It is possible that excessive vibration could dislodge crud; however the crud would be continued within the DSC and would not be released to the atmosphere because the DSC is a sealed vessel. Any later opening of the DSC will be done under controlled conditions which should safely contain the crud and prevent its release to the environment.

C.8. Comment. Several commenters wanted the NRC to set definite methods for the required surveillance and monitoring, including the daily temperature measurements, of NUHOMS so that data is uniform and standardized for future reference on different modules at different reactor locations.

Response. The NRC Certificate of Compliance for the Strandardized

NUHOMS has required temperature measurements; however, the licensee or vendor has latitude in determining how the performance based temperature requirements will be met. The NRC is not convinced that the possible benefits of a uniform, but prescriptive, surveillance and monitoring system or technique would outweigh the costs of curtailing the freedom of cask users to design an implementation scheme suited to their individual needs. Collection of uniform data for possible future reference, but without a specific regulatory need could lead to additional worker's exposure, or adversely affect safety without any offsetting benefit.

C.9. Comment. One commenter asked about the design life of this NUHOMS module and on what documents this is based. Will the canister be removed from the concrete module at a specific time and be opened to the contents?

Response. The design life of the Standardized NUHOMS is 50 years as described in the SAR. The Certificate of Compliance has a 20 year approval period which can be renewed by NRC for another 20 years following a safety reevaluation. It is expected that at the end of operation, the canister will be removed from the concrete module and will be opened in the spent fuel pool facility or an adequate dry environment alternative. The fuel will be transferred to an NRC approved shipping cask for off-site transportation and ultimate disposal by the Department of Energy.

C.10. Comment. One commenter believed it prudent to monitor temperature and air flow to ensure that temperature excursions are not experienced.

Response. NRC believes the required temperature measurement as stated in Specification 1.3.2 of the Certificate of Compliance, plus the daily

visual inspection of HSM air inlets and outlets, will be adequate to ensure temperature excursions exceeding the design basis are not experienced and to determine when corrective action needs to be taken to maintain safe storage conditions. Air flow measurements are not a reliable indicator of thermal conditions; therefore, temperature measurements will be used to monitor the thermal performance of the system.

D. A number of commenters raised technical issues related to the thermal analysis of the Standardized NUHOMS and thermal performance of the system under normal, off-normal, and accident conditions.

D.1. Comment. Several commenters wanted, in the interest of ALARA principles, the verification of approximately 24 kW heat removal capacity to be done using an artificial heat load. One commenter wanted the NUHOMS tested with a full heat load at a testing site like Idaho National Engineering Laboratory (INEL), not tested at each reactor site that may load it with a higher heat generation rate fuel. Another commenter cited the ALARA philosophy of loading the oldest fuel first even though design basis fuel is on site. Several commenters wanted deletion of the requirement to calculate the temperature rise for each (literal interpretation of draft Certificate of Compliance) HSM loaded with canisters producing less than the design limit of 24 kW for the following reasons: (1) Users are not normally provided the vendor's analytical models for this calculation; (2) The 100 degree F rise calculated for the design basis maximum heat load ensures that all safety limits are met for concrete and fuel; (3) Since 24 kW is the limit, virtually all of the HSMs will be affected. This places an undue burden on the user to "baseline" the predicted delta-T by calculation, considering the inherent

safety margins of the system; and (4) Technical Specification 1.3.1 ensures that air flow is not blocked, so a false measurement of low temperature rise cannot occur.

Response. A licensee is not required by NRC to load the oldest fuel first; however, in the interest of ALARA, it may do so. However, each time hotter fuel is loaded up to the maximum allowed in a DSC, the licensee would need to verify the heat removal performance of the system. For fuel producing less heat than the design limits of the system, the heat removal capacity of the system determined by calculation must be verified by temperature measurements. This process must be repeated each time a DSC is loaded with hotter fuel until the maximum system designed heat load is reached. The system when loaded with spent fuel producing 24 kW heat must not have an ambient and vent outlet temperature difference of more than 100°F for fuel cooled equal to or more than five years. This verification process is required to confirm that the as built system of each licensee is performing as designed. A licensee could use an artificial heat source to test an initial cask at a bounding heat load of 24 kW prior to loading fuel. However, this test would only verify the spent fuel heat removal capacity of the system; it would not verify as-build performance. Experience has shown that adequate verification testing can be performed at the reactor site. Therefore, performing the verification at a testing site like INEL would not provide additional safety margins.

D.2. Comment. Several commenters pointed out possible conflicting statements about temperature measurements in the surveillance requirements. In discussions about the heat removal capacity test, temperatures are determined only during the test period. Daily temperature measurements on

each HSM are required to verify thermal performance.

Response. These two temperature measurement programs have different objectives. Temperature measurements by licensees to verify the heat capacity calculations need only be done until equilibrium is reached. The daily temperature measurements by licensees are intended to demonstrate continue safe operation within specified limits over the life of the HSM and may not be the same type of measurement done in the initial period to verify heat renewal capacity.

D.3. Comment. One commenter was concerned about the adequacy of cooling under all atmospheric conditions in the country. The commenter cited humidity over 90%, temperature over 100, and no wind.

Response. 10 CFR 72.212(b) contains regulatory requirements for general licensee users of dry storage casks. Each user must verify that the following conditions are not exceeded at their reactor site for the Standardized NUHOMS: the maximum average yearly temperature with solar incidence is 70°F; the average daily temperature is 100°F; and the maximum temperature is 125°F with incident solar radiation. If the power reactor site high temperature parameters fall within these criteria, the Standardized NUHOMS can be safely used at the site, as demonstrated in the SAR.

D.4. Comment. One commenter wants the NRC to establish procedures to measure temperature performance and especially the thermal performance of an individual module, and not the combined performance of adjacent modules as stated on page A-23 of the draft Certificate of Compliance.

Response. The requirement stated, on the page cited by the commenter is a requirement for the licensee to verify a temperature measurement of the thermal performance for each HSM, not the combined

performance of adjacent modules. A cautionary statement is included in the basis of the specification to ensure that licensee measurements of air temperatures reflect only the thermal performance of an individual module, and not the combined performance of adjacent modules.

D.5. Comment. One commenter wanted to know how the temperature differences in the roof, side wall, and floor areas are incorporated into the daily temperature measurement.

Response. For the first HSM to be emplaced, the user is required to measure the air inlet and air outlet temperature difference of the system at equilibrium. This measurement is to ensure that the heat capacity of the system will not be exceeded, and that the concrete temperature criteria will not be exceeded. For the Standardized NUHOMS, this maximum heat capacity is 24 kW. The 24 kW heat load is the design maximum and is the basis for the thermal hydraulic calculations for the cask. The temperature distribution for various parts of the HSM have been calculated (i.e., the roof, walls, and floor) by the cask vendor. Temperature differences causing thermal stresses in the concrete were evaluated and are duly reported in both the SAR and SER. These calculations were reviewed by NRC as a part of the overall process for this design approval.

D.6. Comment. One commenter stated that daily temperature measurements are not necessary to ensure convective air flow, given the requirement to verify that the inlets and outlets are not obstructed. Site-specific NUHOMS require temperature measurements when the DSC is placed into the HSM, 24 hours later and again at 1 week after loading to ensure adequate thermal performance.

Response. The NRC disagrees with this commenter. The HSM and DSC

are considered components important to safety in the Standardized NUHOMS. Daily temperature measurements by the licensee provide additional assurance of adequate thermal performance of those cask components. The NRC made a policy decision to require daily temperature measurements of the thermal performance of all ventilated type dry storage designs, approved for use by a general licensee, that rely on convective cooling air flow within a concrete neutron/gamma radiation shield. This policy was developed and implemented with the first cask of this type approved by the NRC and listed in §72.214 for use by a general licensee, the VSC-24 cask (58 FR 17967, April 7, 1994).

E. A number of commenters expressed concern about emergency planning and response contingencies.

E.1. Comment. Several commenters expressed concern that in the event of problems and the need to off-load fuel (as is the recent situation at Palisades), a transfer cask may not be available in a timely manner due to inclement weather or because the transfer cask itself has experienced problems or is being used elsewhere. One commenter expressed concern of having a transfer cask on site within 40 hours of vent blockage to prevent concrete damage. If the transfer cask is leased from VECTRA and not at the licensee's site, who is liable if something happens which would require the use of a transfer cask.

Response. The staff has analyzed all design basis accidents involved from the operation of an ISFSI and concluded that here will be no release of radioactive material to the environment. The 40-hour limit on vent blockage is intended to prevent concrete degradation that might occur over a

long period of storage. A vent blockage accident would not result in the release of radioactive material since the DSC would not be breached. Therefore, the NRC believes that the potential risk to the public health and safety is extremely small during the time needed to obtain the use of a transfer cask. Thus, there is no requirement that a transfer cask be at an ISFSI site all the time.

E.2. Comment. One commenter expressed concern that during movement of the fuel in a transfer cask or in a storage cask on a transporter was not analyzed for the effects of tornado winds and missiles.

Response. Both the vendor's SAR and NRC staff's SER address the effects of tornado winds and missiles during movement of the transfer cask with a loaded canister. These analyses show that, for tornado winds, there is a safety factor of 1.5 against overturning when subjected to Design Basis Tornado winds (a safety factor greater than 1 will generally be adequate for public protection). The transfer cask stability, tornado missile penetration resistance, and shell and end plate stresses were calculated and shown to be below the allowable stresses for ASME BPVC Service Level D (accident) stresses.

E.3. Comment. One commenter described an October 1972 storm that flooded the entire Davis-Besse plant site including the (pre-operational) reactor building. There has been subsequent flooding of the site, particularly during spring thaws.

Response. Safety analyses by NRC and the cask vendor show the Standardized NUHOMS can withstand floods and will continue to perform acceptably. With regard to the Davis-Besse site, the licensee changed site topography during plant construction. Specifically, the area was built up and

some dikes were added. The plant structures ground floor elevation is 585 feet International Great Lakes Datum (IGLD), which is also the elevation of the pad. The licensing design basis for maximum probable static water level on the site is 583.7 feet IGLD. As noted, the HSM and DSC were evaluated for flood conditions as required by 10 CFR 72.122(b). The HSM can withstand a maximum water velocity of 15 feet per second and a static head of 50 feet of water. The DSC can withstand a static head of 50 feet of water. Any site which intends to use a Standardized NUHOMS design must evaluate the conditions at their site to verify compatibility with the design specifications of the system.

F. A number of commenters raised issues relating to the design, evaluation, and operation of the Standardized NUHOMS.

F.1 Comment. Several comments related to the fuel to be stored in the Standardized NUHOMS. One commenter wanted control components in assemblies addressed in SAR and SER citing DOE acceptance criteria. One commenter questioned how 55,000 MWD/MTU burnup fuel now being used in pressurized water reactors will be handled since the Standardized NUHOMS-24 is rated to handle only 40,000 MWD/MTU burnup fuel. Another commenter, citing provisions of current site-specific licensees for other NUHOMS designs, stated that higher burnup should be allowed, provided the decay heat and radiological source terms are within limits. Yet another commenter asserted that increased fission products from higher enriched fuel may potentially increase embrittlement of the fuel cladding and that this needs to be evaluated in the SER. The commenter further alleged that this would increase the probability of more defective fuel being loaded into dry casks.

Response. The vendor designed the cask system for storage of pressurized water or boiling water reactor fuel assemblies meeting certain specifications. By limiting the use of the cask system to assemblies meeting these specifications, the vendor made a decision which may partially restrict the use of the cask. However, the NRC does not require that a cask be universal for all types of fuel or usable at every reactor site. For example, none of the casks previously listed in § 72.214 is usable for boiling water reactor spent fuel.

Currently, the 55,000 MWD/MTU burnup fuel and fuel with initial enrichments of greater than 4% will have to remain in the spent fuel pool because dry spent fuel cask designs to store fuel with this higher burnup and initial enrichment have not yet been reviewed and evaluated by the NRC.

F.2 Comment. Several comments related to criticality safety analysis. One commenter questioned the conservatism of using 7.5-year cooled spent fuel when five-year cooled fuel is the minimum specified and when older fuel may also be stored in the cask. Another inquired about criticality safety if the original basket geometry were compromised, as might be the case for brittle failure of a spacer disk. For the compromised basket geometry case, the commenter also asked about the difference in criticality safety for a helium atmosphere rather than a borated water medium. The commenter, referring to July 24, 1992 meeting minutes, inquired why all parties agreed not to spend any resources to make such criticality safety calculations.

Response. The Standardized NUHOMS nuclear criticality safety analysis is based on the following: (1) Babcock and Wilcox 15 x 15/208 pin fuel assemblies with initial enrichments up to 4.0 w% of U-235, and (2) General Electric 7 x 7 fuel assemblies with initial enrichments up to 4.0 w% of U-235,

for the Standardized NUHOMS-24P and NUHOMS-52B designs respectively. The age of the fuel that will actually be stored is not a relevant consideration in criticality safety analysis because the analysis assumes storage of unirradiated fresh fuel which is more reactive than cooled spent fuel. The Standardized NUHOMS-24P system has administrative controls which limit the irradiated fuel reactivity to less than or equal to 1.45 w% of U-235 equivalent unirradiated fuel (Certificate of Compliance Section 1.2.1).

The possibility of a criticality accident due to the brittle failure of the basket should not be a significant concern. No lifting or handling of the DSC outside the spent fuel pool building is permitted to occur if the basket temperature is lower than 0°F. If the user does not determine the actual basket temperature, then the ambient temperature must conservatively be used. Under these temperature restrictions, the basket materials will not behave in a brittle fashion. Consequently, the basket geometry would not be compromised by brittle failure. As for the criticality safety consideration related to a helium atmosphere versus a borated water medium, the k_{eff} of the fuel in a helium atmosphere is much less than the k_{eff} in borated water. Therefore, criticality calculations for the borated water are sufficient because they are more conservative and therefore would bound calculations using a helium atmosphere.

F.3 Comment. Two commenters were concerned with shielding and dose assessments for the Standardized NUHOMS. One commenter believed that using 10-year cooled fuel for the dose assessment was nonconservative when five-year cooled fuel is needed to load the DSC to produce 24 kW of heat. Another, referring to an NRC meeting with PNFSI, wanted clarification of an NRC request to delete a clause allowing utility to perform site-specific shielding

calculations.

Response. The cask vendor presented dose assessment results in the SAR for both five and ten-year cooled fuel. However, for this rulemaking, NRC used the dose assessment for 5-year cooled fuel for the shielding analysis radiation source term, and for accidental releases of radionuclide material. NRC's use of the 5-year cooled fuel assessment is conservative and bounding.

To ensure safe storage of spent nuclear fuel in NRC approved casks, the NRC specifies, in the Certificate of Compliance, Section 1.2.1, a number of fuel acceptance parameters. These parameters, which may include burnup, initial enrichment, heat load, cooling time, and radiological source term, define the properties of those assemblies that can be stored in a cask. One such parameter of interest for the Standardized NUHOMS is the radiological source term that forms the basis of the shielding analyses. For this parameter, the vendor proposed an alternative approach. Specifically, for fuel assemblies that fall outside the specified source term parameters but satisfy all other parameters, the vendor proposed to allow licensees to do individual cask shielding calculations to show compliance with the design basis dose rates. This could possibly result in more assemblies, in a licensee's inventory, that would be eligible for dry storage. In the instance noted in the comment, the NRC did not agree with the vendor proposal. The Certificate of Compliance dose rate specifications provide a simple check to ensure that DSCs are not inadvertently loaded with the wrong fuel. The dose rate specifications are based on the shielding analyses provided by the vendor in its SAR. Because of differences in non-fuel components in the ends of some assemblies, dose rates higher than those evaluated by NRC in the SER may occur at the ends of casks than were assumed in the shielding analysis. The

Certificate of Compliance specifications allow for this possibility and permit the licensee to store such fuel provided the licensee verifies proper cask fabrication, conformance with all other fuel parameters, and compliance with radiation protection requirements. The site-specific calculations referred to in the comment are not shielding calculations, but rather are the licensee's written evaluations (or dose assessments), required by §72.212(b)(2)(iii), to establish that the radiation criteria for ISFSI in §72.104 have been met. The Certificate of Compliance also requires that the licensee submit a letter report to the NRC summarizing its actions in such a case.

F.4 Comment. Several commenters were concerned with fuel clad integrity issues. Particularly, they were concerned with potential problems that may arise because of differences between vertical and horizontal storage. One commenter noted that it was essential to carefully inspect the cladding for the minute hairline cracks which would allow the radioactivity inside to escape. Another commenter wanted it made clear that for fuel to be eligible for storage it doesn't need to be specifically inspected nor require special handling or storage provisions within the spent fuel pool. The commenter also asserted that pinhole leaks in fuel rod cladding do not constitute gross breeches. The commenter wanted fuel cladding integrity clarified. Another commenter claimed that horizontal storage of fuel rods will lead to cladding deterioration which would challenge the technical specifications of the NUHOMS cask. Yet another commenter was concerned about the possibility of fuel rod bowing which could result in weighted contact between the fuel cladding/crud and the DSC guide sleeve, and the potential for eventually bonding of the materials over the duration of the storage period. One commenter, noting that some of the fuel in the spent fuel pools could be nearly 20 years old, was

concerned that the fuel will not be tested for leaks using specific techniques such as penetrating dyes, eddy current, sipping or ultrasound before canister loading. A commenter wanted all fuel with known defects and all water-logged fuel retained in the spent fuel pool until the cask integrity under operating conditions is fully demonstrated. Another wanted to know how "grossly breached" fuel will be ultimately handled and shipped off site.

Response. For storage of PWR fuel in the standardized NUHOMS, the rods stored in a horizontal orientation do not normally deflect in the middle of any span such that the rods contact the DSC guide sleeve for PWR fuel. However, the possibility exists that a bowed rod may come in contact with the guide sleeve.

With respect to storage of BWR fuel, the fuel channel which surrounds the fuel bundle (rods) provides a barrier to separate coolant flow paths, to guide the control rod, and to provide rigidity and protection for the fuel bundle during handling. Therefore, the BWR fuel rods inside the channel do not come in contact with the guide sleeves. Even if there were such contact, the interaction would not present a significant concern because the guide sleeve material is a stainless steel, which has a very low rate of corrosion, and the DSC cavity is evacuated and back-filled with inert helium, which further reduces the likelihood of any corrosion involving the guide sleeve and fuel rods.

The Certificate of Compliance requires that the fuel have no known or suspected gross cladding breaches to ensure the structural integrity of the fuel. Known or suspected failed fuel assemblies (rods) and fuel with cladding defects greater than pin holes and hairline cracks are therefore not authorized in the Standardized NUHOMS. Fuel meeting this specification will

be safely stored and will remain intact in storage because of the dry inert atmosphere and relatively low temperature which will prevent deterioration of the cladding. Currently, grossly breached fuel will be handled in site-specific applications.

F.5. Comment. Quite a few comments related to the structural stability of the HSM, particularly its response to earthquakes. Commenters questioned the possibility of vertical storage of the Standardized NUHOMS and suggested that it would be very difficult to restrain the HSM if the DSC were in a vertical position. One commenter wanted dry storage casks constructed to Building Officials Code Administrators (BOCA) National Building Code (and Ohio Administrative Code) for structures in use group H-4, high hazard use, which includes radioactive materials. Commenters questioned whether ground acceleration used by NRC in its evaluation could adequately describe all potential earthquakes east of the Rocky Mountain Front and suggested that a ground acceleration of 2.5g would not be realistic for all sites, despite proximity to fault lines. Another commenter alleged a number of seismic events in the midwest, that had some effect in the Ohio area, could cause a complete failure of the cask and requested NRC insists that the cask, containment structure and foundation pad be designed to substantially exceed all earthquakes with a potential for 0.60g. One commenter wanted to know if the module had been analyzed for earthquake events, at all US reactor sites, according to Laurand Findmun Seismic Hazard Curves. Others expressed various concerns about the integrity and reaction of the Standardized NUHOMS components under earthquake conditions and asked such questions as: Could the casks crash against each other as ground moves beneath them; Could the module shift, crack or move off the pad; How are the rail support holdings evaluated;

Could the DSC be knocked off the rails; or Could the module roof crack and fall on the canister?

Response. The Standardized NUHOMS design described in the vendor's applications for approval and SAR does not address vertical storage. Consequently, NRC neither evaluated nor approved vertical storage for the system. Therefore it may not be stored vertically.

The NRC reviewed the Standardized NUHOMS for compliance with design criteria that are more stringent than those of the BOCA National Building Code (NBC) (see response to Comment A.5). These more stringent criteria are included in national standards that more closely represent the use of the Standardized NUHOMS.

Part 72 specifies a design basis maximum ground acceleration of 0.25g, for areas east of the Rocky Mountain Front that are not in areas of known seismic activity. All HSMs and DSCs are designed to withstand a 0.25g earthquake. Any reactor licensee which intends to use the Standardized NUHOMS must verify that the maximum displacements at the cask's location on the reactor site are within the design criteria for the system. The Standardized NUHOMS is free standing and not dependent on the pad for safety. Failure of the pad, due to seismic events, will not cause the Standardized NUHOMS to fail. Therefore, cask safety does not require the pad to be designed to withstand a seismic event.

F.6. Comment. One commenter stated that the SAR did not include consideration of the following accident events: a. Aircraft crashes; b. Turbine missiles; c. External fires; d. Explosions; and e. Sabotage.

Response. Prior to using the Standardized NUHOMS, the general licensee must evaluate to assure the site is encompassed by the design bases

of the approved cask. The events listed in the comment are among the site-specific considerations that must be evaluated.

Generally, licensees sites restrict aircraft flight paths over the facility. Turbine missile analyses typically show a very low probability of a turbine missile breaking the turbine casing. The site's turbine missile analyses must be considered as part of the facility's analysis of the suitability of the storage location. External fires are handled by established fire control programs. Explosions are prevented by control of combustibles under the licensee's fire protection program. Sabotage is considered under the criteria for security programs that each licensee must implement.

F.7. Comment. Several commenters raised issues about the pad and foundation for the Standardized NUHOMS. One commenter referring to a previous rulemaking that stated the NUHOMS cask required site-specific approvals because they are constructed inplace. Other commenters, concerned with seismic events at the Davis-Besse Nuclear Power Station and soil stability issues similar to cask use at the Palisades Plant, asserted that there was a necessary relationship of the Standardized NUHOMS cask or module to the pad at a specific site and that evaluation of it could not be based on the reactor site seismic analysis. Each site required singular seismic and soil analysis for dynamic loads and not just static loads.

Response. The NUHOMS design referred to in the previous rulemaking of 1990 (55 FR 29181) includes the site-specific pad as an integral part of the concrete HSM and therefore is important to safety. The Standardized NUHOMS, considered in this rulemaking, has the HSMs as free standing units, that is, they have no structural connections to the pad. The

Standardized NUHOMS does not rely on the pad to perform a safety function to protect public health and safety. The vendor analyzed the HSM containing the DSC for peak ground accelerations of 0.25g caused by earthquakes and found that it would neither slide nor overturn. NRC evaluated the Standardized NUHOMS under a wide range of site conditions that could diminish cask safety. Further, under the NRC general license, before using the Standardized NUHOMS, a licensee must verify that reactor site parameters are within the envelope of conditions reviewed by NRC for the cask approval. If potential conditions exist at the reactor site (including potential erosion, soil instability, or earthquakes) which could unacceptably diminish cask safety by any credible means, then the licensee's analysis must include an evaluation of the potential conditions to verify that impairment of cask safety is highly unlikely.

The NRC's regulations do not explicitly require a licensee using a cask under a general license to evaluate the cask storage pad and foundation under such site conditions for erosion or earthquakes. But as explained above, if conditions at the reactor site could unacceptably diminish cask safety by, for example, affecting the stability of the supporting foundation so as to put the cask in an unsafe condition, then the cask may not be used unless the foundation is appropriately modified or a suitable location at the reactor site is found. Implicitly, therefore, the pad and the underlying foundation materials must be analyzed under site conditions that include erosion, soil instability, and earthquakes, notwithstanding that the pad has no direct safety function and that the cask is designed to retain its integrity even assuming the occurrence of a range of site conditions.

As a related matter, it should be noted that the licensee has the

responsibility under the general license to evaluate the match between reactor site parameters and the range of site conditions (i.e., the envelope) reviewed by NRC for an approved cask. Typically, the licensee will have a substantial amount of information already assembled in the Final Safety Analysis Report (FSAR) for the nuclear reactor. In addition, the envelope for the approved cask is identified in the NRC SER and Certificate of Compliance and in the cask vendor's SAR for the cask. Of course, the licensee should consider whether the envelope evaluated by NRC adequately encompasses the actual location of the cask at the reactor site. In addition, the licensee should consider whether there are any site conditions associated with the actual cask location which could affect cask design and which were not evaluated in the NRC safety evaluation for the cask.

The vendor analyzed the DSC and the HSM for rigid body response (i.e., sliding and overturning) to seismic accelerations. The resultant peak horizontal ground acceleration is 0.37g and the peak vertical acceleration is 0.17g. The margin of safety against sliding is 1.35. Similarly, the HSM will not tip-over due to the design seismic force because the stabilizing moment of the HSM is greater than the seismic overturning moment. The margin of safety against overturning is 1.26. Thus, no sliding or overturning of the HSM or DSC will occur due to the design earthquake.

Since, as discussed above, the pad is not considered as a safety related item, a specific pad design is not being approved in this rulemaking for the Standardized NUHOMS. The Standardized NUHOMS and the DOE MPC are not related.

F.8. Comment. A few commenters had questions pertaining to the operation of and procedures for the Standardized NUHOMS. One commenter inquired whether just one module of the Standardized NUHOMS could be purchased

by a utility, or whether 3, 5, or whatever number of modules desired could be procured and easily added like singular casks. One commenter expressed concern about snow removal procedures to prevent the blockage of the bottom vents by drifting snow. Another commenter wanted NRC to establish a procedure and criteria for dose rates discussed on pages A-15 and A-16 in the draft Certificate of Compliance. Several commenters noted that a procedure to open a storage cask and remove the fuel, has not been tried before nor documented in the rulemaking. They were also concerned that unloading of a cask would place workers at higher risk.

Response. With respect to the purchase of NUHOMS modules, the NRC Certificate of Compliance does not permit or limit the number that may be purchased by a general license. NRC does not regulate the commercial arrangements between the cask vendor and user including any provisions on the number of casks that can be purchased or added to the Standardized NUHOMS.

Under the Certificate of Compliance, Section 1.3, the user of the Standardized NUHOMS (general licensee) is required to conduct a visual surveillance of the exterior of air inlets and outlets. If the surveillance shows blockage of air vents, they must be cleaned in accordance with proper procedures. These procedures will minimize the potential impact to the health and safety of workers. The daily temperature measurements indicate proper thermal performance.

The Certificate of Compliance requires each licensee to develop procedures to implement the dose criteria prescribed on pages A-15 and A-16. On page A-15 of the Certificate of Compliance, Section 1.26, the dose rate criteria to be met is equal to or less than: (a) 200 mrem/hr at top shield plug surface at centerline with water in cavity, and (b) 400 mrem/hr at top

cover plate surface at centerline without water in cavity. On page A-16 the dose rate criteria is less than or equal to: (a) 400 mrem/hr at 3 feet from the HSM surface, (b) outside of HSM door on center line of DSC 100 mrem/hr, and (c) end shield wall exterior 20 mrem/hr. Each licensee is required to develop its own procedures to implement the above criteria. In addition, each licensee must develop operational procedures for the ISFSI for workers radiation exposure to be ALARA.

For the Standardized NUHOMS, removal of spent fuel from the DSC is addressed in Chapter 5 of the SAR and in Chapter 11 of the SER. The process is essentially the reverse of loading operations and would be performed under the reactor license radiation protection program. The Certificate of Compliance requires each user to develop written procedures for these operations and includes precautions to be considered for unloading. 10 CFR Part 20 requires that ALARA be addressed. Specification 1.1.6 of the Certificate of Compliance requires that pre-operational testing and training exercises include the opening of a DSC and returning the DSC and transfer cask to the spent fuel pool. The Certificate of Compliance also requires the training program to include off-normal events.

F.9. Comment. One commenter citing the May 1993 study prepared for the NRC by the Center for Nuclear Waste Regulatory Analyses of San Antonio, Texas, questioned the relatively higher temperature consequences of dry storage on fuel cladding. The report states that, "the dry environment has the potential of producing such problems as further fuel cladding oxidation, increased cladding stresses and creep deformation as a result of rod internal pressure... These possible spent fuel and cladding alteration modes could be quite accelerated under dry storage conditions, since temperatures are much

higher than in wet storage." The commenter does not believe that NRC is fulfilling its obligation to see that "spent fuel cladding must be protected during storage against degradation that leads to gross rupture" §72.122(h).

Response. The May 1993 study addresses the long-term geological disposal of high-level waste (spent fuel), and is not directed to the short-term interim storage of spent fuel at nuclear power plants. The report evaluates processes over 10,000 years of repository performance for geological disposal. Its conclusions are not applicable for the interim storage period, of a 20-year cask certificate, during which spent fuels stored in the DSC have to meet the NRC's criteria to ensure that cladding must be protected. Under normal operation of the ISFSI, leakage of radionuclides is not expected to occur, since the design and the double-seal welding of the DSC covers are checked and tested to provide structural integrity throughout the approved storage period. During normal storage conditions, the licensee is required to conduct a radiation monitoring program to ensure protection of workers and the safety of the general public.

G. A number of comments were related to broad policy and program issues in connection with the storage and disposal of high-level radioactive waste including the DOE repository program. Some questioned the use of dry cask storage and technology in general. Some commenters stated that only dry storage casks that would be compatible with DOE interim or final repository operations, including transportation, be approved for use under a general license.

G.1. Comment. One commenter does not want any more casks approved until a permanent federal repository is opened. The wet fuel pool is a proven

technology which has been successful in containing radioactivity. Another commenter stated that dry storage is dangerous.

Response. The NRC, in implementing the Nuclear Waste Policy Act of 1982, has an obligation to review dry storage technologies and to determine whether to approve the use of such technologies for the storage of spent fuel, provided they meet applicable safety requirements. The previous rulemaking of 1990 (55 FR 29181) found that spent fuel stored in dry storage casks designed to meet the NRC regulatory requirements can safely contain radioactivity. This rulemaking adds one cask design, which meets the safety requirements previously developed. The previous responses to comments, as well as the detailed safety and environmental analyses underlying this rulemaking, and described elsewhere in this notice, all reveal the Standardized NUHOMS will conform to the NRC requirements, and that its use should not pose the potential for significant environmental impacts.

DOE is required by the Nuclear Waste Policy Act of 1982 to accept spent fuel for ultimate disposal. Moreover, the Commission made a generic determination in its waste Compliance Decisions (55 FR 38474; 49 FR 34658) that safe disposal is technically feasible and will be available within the first quarter of the 21st century.

Dry cask storage has significant advantages over wet storage in that the system is passive requiring minimal human intervention. No pumps, filters, and water quality monitoring are needed to maintain the conditions necessary for wet storage. The only monitoring required for the Standardized NUHOMS is daily temperature monitoring and visually checking inlet and outlet vents.

G.2. Comment. A number of commenters wanted a full public hearing on the use of the NUHOMS cask.

Response. Consistent with the applicable procedure, the NRC does not intend to hold formal public hearings on the Standardized NUHOMS rule or separate hearings at each reactor site prior to use of the dry cask technology approved by the Commission in this rulemaking. Rulemaking procedures, used by the NRC for generic approval of the Standardized NUHOMS, including the underlying staff technical reviews and the opportunity for public input, are more than adequate to obtain public input and assure protection of the public health and safety and the environment. Further, in this rulemaking, NRC has taken additional steps to elicit and fully consider public comments on the Standardized NUHOMS technology including NRC participation in public meetings near Davis-Besse and extension of the public comment period by 45 days in response to public requests. This extension provided a total public comment period of almost four months.

Section 133 of the Nuclear Waste Policy Act of 1982 authorizes the NRC to approve spent fuel storage technologies by rulemaking. When it adopted the generic process in 1990 for the review and approval of dry cask storage technologies, the Commission stated that "casks...[are to] be approved by rulemaking and any safety issues that are connected with the casks are properly addressed in that rulemaking rather than in a hearing procedure." 55 FR 29181 (July 18, 1990). Rulemaking under NRC rules of practice, described in 10 CFR 2.804 and 2.805, provides full opportunity for expression of public views, but does not use formal hearings of the type requested by commenters.

In this proceeding, rulemaking clearly provided adequate avenues for members of the public to provide their views regarding NRC's proposed approval of the Standardized NUHOMS, including the opportunity to participate through

the submission of statements, information, data, opinions and arguments. In this connection, the NRC staff prepared for public examination, technical evaluations for Standardized NUHOMS, detailed, documented findings of compliance with NRC safety, security and environmental requirements. In November of 1993, the NRC staff reviewed the Standardized NUHOMS, and approved the design for the purpose of initiating this rulemaking to grant a generic approval of the design. In addition, the staff conducted a second review in response to the public comments on the Standardized NUHOMS in this rulemaking, again finding compliance with NRC requirements as set forth in this notice of final rule and response to comments.

In addition to reviewing, systematically and in depth, the technical issues important to protecting public health and safety, and the environment, the NRC has taken extra steps to obtain and fully consider public views on the Standardized NUHOMS technology, and has made every effort to respond to public concerns and questions about the Standardized NUHOMS compliance with NRC safety, security, and environmental requirements. The initial public comment period opened on June 2, 1994, and was scheduled to close on August 16, 1994. On August 29, 1994, the public comment was extended to September 30, 1994. NRC also participated in an earlier meeting near the Davis-Besse site.

Under these circumstances, formal hearings would not appreciably add to NRC's efforts to ensure adequate protection of public health, safety, and the environment, and are unnecessary to NRC's full understanding and consideration of public views on the Standardized NUHOMS.

G.3. Comment. One commenter stated that there is not now and there may not be a permanent HLRW repository for commercial reactor fuel and the fact that the NUHOMS 24P and 52B casks are non-transportable, any distinction

between so called "temporary storage" and "permanent disposal" of this waste is moot... Due to the lack of a permanent repository or Monitored Retrievable Storage (MRS) any time in the foreseeable future, the case of a serious spill and the resultant contamination at an environmentally unsuitable site like Davis-Besse where "short and long-term adverse impacts associated with the occupancy and modification of (a) floodplain... potential release of radioactive material during the lifetime of the ISFSI...(and location) over an aquifer which is a major water resource" have been inadequately dealt with.

Response. This rulemaking to certify the Standardized NUHOMS is for interim storage of spent fuel in an approved cask for 20 years. It does not authorize or approve the ultimate disposal in a permanent high-level radioactive waste (HLRW) repository, which is under the responsibility of the Department of Energy. During interim storage, the user (holder of a Part 50 license) must protect the spent fuel against design basis threats, against environmental conditions and natural phenomena, such as tornadoes, tornado missiles, earthquakes, and floods. In regard to flooding, the Certificate of Compliance has provision (see A-2 of Certificate of Compliance) for flood condition analysis to ensure that there is no release of radioactive material from flooding.

G.4. Comment. One commenter stated that "projected future uses of land and water within the region" are impossible to make given the unknown length of time this waste may remain on site and the options for both cask and reactor license renewal beyond 20 and 40 years respectively and the fact that no known man-made structure can last for the length of time that this waste must be isolated from humans and the environment. If an MRS or repository ever become available, this waste may have to be repacked. Each handling of

this waste increases the likelihood of an accident, spill, contamination, worker and public exposures.

Response. Projected future land and water use can be made based on the continued safe operation of a reactor and its associated dry cask storage facility. The continued operation of these facilities should have no greater impact on land and water use in the future than they do today. As previously noted, the NRC Waste Confidence decisions concluded there is reasonable assurance that safe disposal of spent fuel by the Federal government will be available by 2025. Therefore, the spent fuel will not remain at a reactor site for the length of time it must be isolated from humans and the environment.

It should be noted that the absence of significant environmental impacts from dry cask storage at a reactor site is the conclusion of NRC EAs for the Standardized NUHOMS and for previously approved dry casks analyzed in earlier rulemakings addressing 10 CFR Part 72, and in the Commission's Waste Confidence decisions in 1984 (August 31, 1984; 49 FR 34658) and 1989 (September 29, 1989; 54 FR 39765). In the 1984 Waste Confidence decision, the Commission concluded there was reasonable assurance that spent fuel can be safely stored at reactor sites without significant environmental impacts, for at least 30 years beyond expiration of NRC reactor operating licenses. The 1989 Waste Confidence decision review reaffirmed prior Commission conclusions on the absence of significant environmental impacts.

G.5. Comment. One commenter questioned whether the NUHOMS canister will fit the conceptual design for the DOE MPC. If DOE chooses to use vertical casks (like the VSC) at the MRS, then will the NUHOMS inner canister fit into the vertical outer concrete shell in the MPC design? If local

reactors choose the VSC-24 or the NUHOMS, will either inner metal canister fit into the overpacks for DOE, or will they have to be opened after storage, returned to the pool, the fuel put in a new canister, and the old one discarded as radioactive waste?

Response. The Certificate of Compliance for the Standardized NUHOMS is intended for the interim storage of spent fuels and is not required to conform to and therefore has not been evaluated by NRC for conformance with the conceptional design for the DOE multi-purpose canister (MPC). DOE has not yet made final decisions regarding design or deployment of the MPC. Therefore, it is not possible to speculate on conformance of the Standardized NUHOMS to the MPC.

G.6. Comment. One commenter asked what is the criteria for 20-year renewal of this cask design. How will this be checked? If the design is not renewed, what is the plan?

Response. The 1989 proposed rule (54 FR 19379) to add Subparts K and L to Part 72 indicated that the 20-year period represents, what the Commission believes to be, an appropriate increment for cask design approvals. The application for design reapproval would have to demonstrate the casks ability to perform the necessary safety functions for the reapproval period. The application would be evaluated by NRC against the Commissions regulatory requirements. If a cask design is not reapproved, the licensee would have to remove casks from service as the 20-year approved storage life expired. This could mean removal of the spent fuel and storing it elsewhere.

G.7. Comment. One commenter wanted a discussion as to the need of an additional cask design including how it more sufficiently meets the need of the interim dry cask storage of high-level waste.

Response. Section 218(a) of the Nuclear Waste Policy Act of 1982 (NWPA) provides the following directive: "The Secretary [of DOE] shall establish a demonstration program in cooperation with the private sector, for the dry storage of spent nuclear fuel at civilian nuclear reactor power sites, with the objective of establishing one or more technologies that the [Nuclear Regulatory] Commission may, by rule, approve for use at the sites of civilian nuclear power reactors without, to the maximum extent practicable, the need for additional site-specific approvals by the Commission." After subsequent DOE technical evaluations and based on a full review of all available data, the Commission approved dry storage of spent nuclear fuel in a final rule published in the Federal Register on July 18, 1990 (55 FR 29181). The final rule established a new Subpart K within 10 CFR Part 72 entitled "General License for Storage of Spent Fuel at Power Reactor Sites." Therefore, there is a need for casks to be approved by NRC to implement the NPWA to meet the demand of the interim dry cask storage of spent fuels in the nuclear power plants. However, the variety of cask designs submitted by vendors for NRC review and approval are mostly dictated by economic reasons that do not involve NRC.

H. A number of commenters wanted site-specific analysis done for each use of the Standardized NUHOMS despite the fact that each licensee must determine that the site parameters are enveloped by the cask design specified in the SAR, SER, and Certificate of Compliance. The intent of 10 CFR Part 72, Subpart K was to grant a general license to licensees of power reactors to use NRC approved dry storage casks listed in §72.214 without additional licensing review by NRC.

H.1. Comment. A number of commenters wanted site-specific Environment Impact Statements (EIS). Several commenters stated that an EIS should be required on any such waste facility that may be permanent along the Great Lakes fresh water system. To say this "will have no adverse effect on public health and safety" is a prediction most of the public does not accept. The commenter still feels that the generic ruling to use dry cask storage design at any reactor site is impossible and should be discarded. By relying on environmental evaluations done in the 1970's prior to Davis-Besse construction, the NRC is remiss in its responsibility to protect the people of Ohio from harm by its licensee. Another commenter wants the NRC to prepare, at a minimum, an Environmental Assessment (EA) for each site including information on sensitive ecosystems, wildlife, demography, meteorology and geology. The EA should discuss the cask capability to withstand weather conditions and potential catastrophic events.

Response. The potential environmental impacts of utilities using the Standardized NUHOMS (or any to the other spent fuel casks approved by NRC (10 CFR 72.214)) have been fully considered and are documented in a published Environmental Assessment (EA) covering this rulemaking. Further, as described below, the EA indicates that use of the casks would not have significant environmental impacts. Specifically, the EA notes the 30-plus years of experience with dry storage of spent fuel, identifies the previous extensive NRC analyses and findings that the environmental impacts of dry storage are small, and succinctly describes what impacts there are, including the non-radiological impacts of cask fabrication (i.e., the impacts associated with the relatively small amounts of steel, concrete, and plastic used in the casks are expected to be insignificant), the radiological impacts of cask operations

(i.e., the incremental offsite doses are expected to be a small fraction of and well within the 25 mrem/yr limits in NRC regulations), the potential impacts of a possible dry cask accident (i.e., the impacts are expected to be no greater than the impacts of an accident involving the spent fuel storage basin), and the potential impacts due to possible sabotage (i.e., the offsite dose is calculated to be about one rem). All of the NRC analyses collectively yield the singular conclusion that the environmental impacts and risks are expected to be extremely small.

The absence of significant environmental impacts from dry cask storage at a reactor site is also the conclusion of NRC EA's for previously approved dry casks analyzed in earlier rulemakings addressing 10 CFR Part 72, and in the Commission's Waste Confidence decisions in 1984 (August 31, 1984; 49 FR 34658) and 1989 (September 29, 1989; 54 FR 39765). In the 1984 Waste Confidence decision, the Commission concluded there was reasonable assurance spent fuel can be safely stored at reactor sites without significant environmental impacts, for at least 30 years beyond expiration of NRC reactor operating licenses. The 1989 Waste Confidence decision review reaffirmed prior Commission conclusions on the absence of significant environmental impacts.

Thus, given the Commission's specific consideration of environmental impacts of dry storage summarized above, and given the absence of any new information casting doubt on the conclusion that such impacts are expected to be extremely small and not environmentally significant. The NRC is not convinced that meaningful new environmental insights would be gained from either a new site-specific EIS or EA for each site using the dry storage methods.

The EA covering the proposed rule, as well as the finding of no significant impact (FONSI) prepared and published for this rulemaking, fully comply with the NRC environmental regulations in 10 CFR Part 51. Moveover, since the Commission's environmental regulations in Part 51 implement National Environmental Policy Act (NEPA) and give proper consideration to the guidelines of Council of Environmental Quality (CEQ), they ensure that the EA and FONSI conform to NEPA procedural requirements, and that further analyses are therefore not legally required.

In connection with the EA and FONSI, it bears emphasizing that 10 CFR Part 72, Subpart K already authorizes dry cask storage and already approves dry casks for use by utilities to store spent fuel at reactor sites. See 10 CFR 72.214 for a listing of information on Cask Certificate Nos. 1000 through 1003, 1005, and 1007. The present rulemaking is accordingly for the limited purpose of adding one more cask to the list of casks already approved by NRC. Furthermore, the cask, to be added to the NRC list by this rulemaking, will comply with all applicable NRC safety requirements.

Finally, this rulemaking applies to cask use by any power reactor within the United States.

H.2. Comment. One commenter stated that the January 30, 1994, reply from NRC's Robert Bernero to Mr. Adamkus (from U.S. EPA) is completely inadequate as is the March 1994 "Draft Environment Assessment and Finding of No Significant Impact" because no consideration is given to the site's unsuitability even for LLRW per NRC's own admission, and "new information which could alter the original site evaluation findings" is ignored.

Response. This final rule does not provide any site-specific NRC approval or address site-specific parameters that are peculiar to a particular

reactor site. Rather, the rule only adds one cask design, the Standardized NUHOMS, to the list of approved casks available for use by a power plant licensee in accordance with the conditions of the general license in Part 72. Pursuant to those conditions each licensee must determine whether or not the reactor site parameters (including earthquake intensity and tornado missiles) are encompassed by the cask design bases considered in the cask SAR and SER. The EA and FONSI for this rule is limited in scope to the Standardized NUHOMS in a generic setting.

Unlike interim storage prescribed in 10 CFR Part 72, the in-ground disposal of radioactive material, whether high-level or low-level waste (HLW or LLW), must take into account the geologic, hydrologic, and geochemical characteristics of the site or region to isolate the radioactive waste from the accessible environment. Site criteria for in-ground disposal of radioactive wastes enable an applicant to choose an appropriate site, one with a combination of favorable conditions that will be a natural barrier to retard or attenuate the migration of any leaked radioactive material over a long period to control releases within acceptable limits. The disposal period for LLW is on the order of 500 years and for HLW, greater than 10,000 years. Therefore, site characteristics are investigated and assessed for interim spent fuel storage under Part 72, not to determine their suitability as a barrier to release of radioactive material, but rather to determine the frequency and the severity of external natural and artificial events that could affect the safety of an ISFSI. Unlikely but credible severe events are considered to determine the safety of the storage cask design.

H.3. Comment. One commenter stated that the NRC has not "approved technologies for the use of spent fuel at the sites of... without the need for

additional site reviews." If that were so, no additional site review would have been necessary at Palisades, nor would an SAR revision or a Certificate of Compliance amendment be called for right after the VSC-24 was certified.

Response. The approval and use of dry storage technologies under the provisions of the general license is relatively new. As such, and given the specific concerns raised by members of the public, additional precautions were taken at the Palisades Nuclear Station to ensure that all NRC conditions for use of the approved cask were followed. As is the case at all sites, NRC conditions require the cask user to determine if the design basis for the storage technology they are considering encompasses the site parameters at the location where the fuel is to be stored. The review at Palisades confirmed this to be the case. As the experience with use of this new design is gained, modifications to the design described in the SAR are expected and allowed under the provisions of §72.48.

H.4. Comment. One commenter wanted the environmental impacts evaluated of alternatives, such as; renewable energy sources, conservation of energy, shutting down the nuclear power plants, and wind and solar power.

Response. Energy production is not the subject of this rulemaking and alternate sources of energy are, therefore, not reasonable alternatives requiring evaluation. This rulemaking is limited to the addition of the Standardized NUHOMS to the list of approved casks in §72.214.

H.5. Comment. One commenter stated that the NRC is ignoring the regulatory requirements of a site-specific license as to the feasibility of using the cask or of modifying their design.

Response. This rulemaking does not cover site-specific NRC licensees; however, the NRC is not ignoring them. Under NRC regulations, the

utility has two options in using dry cask storage of spent fuel: (1) the licensee can apply for a site specific license from NRC, or (2) the licensee can use an NRC approved cask under the general license provisions of 10 CFR Part 72, Subpart K. However, not all licensees may be able to use the general license provisions either because the fuel type they possess is not storable in any cask listed in §72.214 or because none of the cask designs envelope the reactor site parameters. The NRC is also not ignoring site-specific license considerations relating to modifying casks designs. Quite the contrary, the criteria that apply to modifications of an NRC approved cask such as the Standardized NHOMS are the same as the criteria that apply to modifications of site-specific ISFSIs.

H.6. Comment. Since the economies of several states and provinces including two thirds of the population of Quebec live along the St. Lawrence Seaway, one commenter wanted an Economic Impact Statement conducted with a cost/benefit analysis citing possible adverse impact on tourism and sport fishing.

Response. A regulatory analysis, which considers both benefits and impacts of adding the Standardized NUHOMS to the list of NRC-approved casks under 10 CFR Part 72, Subpart K, was prepared in support of this rulemaking action. It was included as a part of the notice of proposed rulemaking and is also included in this final rulemaking notice. However, this regulatory analysis reflects the limited scope of this rulemaking. In particular, since the rulemaking does not provide any site-specific NRC approvals, NRC did not evaluate site-specific economic impacts.

H.7. Comment. One commenter wanted to restrict the use of the cask to reactor sites that have responded to NRC Generic Letter 88-20 Supplement 4

Individual Plant Examination of External Events (IPEEE) on schedule.

Response. IPEEE response submittal will not address dry cask storage and are not necessary for Standardized NUHOMS use.

H.8 Comment. One commenter stated that NUHOMS must not receive generic approval because site-specific characteristics must be considered, placing this cask on the shores of Lake Erie is potential ecocide, and the cask is not terrorist proof. Another commenter stated that the potential engineering problems of storing high level nuclear waste in a variety of climatic and geologic regions of the United states are not considered.

Response. A utility's use of the Standardized NUHOMS, for the storage of spent fuel in casks at a reactor site, would not have a significant impact on the environment. This finding is supported by the NRC safety and environmental evaluations for the Standardized NUHOMS, including the applicant's demonstration of compliance of the cask with NRC requirements, as well as by the 1990 rulemaking on dry cask storage and the 1984 and 1989 waste confidence proceedings. Since the Standardized NUHOMS can only be used by a licensee provided the site parameters are enveloped by the cask design basis, as specified in the SAR and SER, cask storage of spent fuel near the shore of Lake Erie within the specified parameters would not have a significant impact on the environment.

I. The following comments relate to the transportability of dry storage casks to an off-site location.

I.1. Comment. One commenter questioned how the cask transport methods used on-site and to a off-site locations are related.

Response. In this rulemaking, the NRC reviewed the cask vendor's

proposed means for transporting the Standardized NUHOMS canister and transfer cask outside the reactor buildings to the on-site storage pad under the storage requirements of 10 CFR Part 72. This on-site movement occurs within an owner-controlled area where access can be limited, and where operations would be safely managed by the general licensee. NRC did not review the Standardized NUHOMS for transport off-site, for example to a DOE MRS or respository. Generally, off-site transport of spent fuel occurs in public places where the shipper has less access restrictions and limited control of the surroundings. Off-site spent nuclear fuel shipments must be made in a transportation cask approved by NRC pursuant to NRC's regulations found in 10 CFR Part 71, "Packaging and Transportation of Radioactive Material," and must also comply with pertinent Department of Transportation (DOT) Regulations. At this time, the NRC is approving the Standardized NUHOMS for storage only.

I.2. Comment. One commenter, citing a Wisconsin Public Service Commission EIS for Point Beach, questioned the statement, "The baskets heavier weight and larger diameter make the transportability of an intact NUHOMS canister to an MRS site or repository questionable."

Response. The NRC has not reviewed the Standardized NUHOMS in this rulemaking for off-site transportation.

I.3. Comment. One commenter wanted to know the relationship between the Standardized NUHOMS and the NUHOMS MP187 now applying for a Certificate of Compliance. Is the MP187 transportable? Will the canister of all models fit into the transport overpack? Wouldn't a utility be better off waiting for the transportable cask rather than choosing a storage only cask that may have compatibility problems with an MPC system?

Response. The MP-187 transportation overpack utilizes a canister

similar to the Standardized NUHOMS. However, it is the subject of a separate NRC review as part of a site specific licensing application. Both the Standardized NUHOMS and the MP-187 share many common design features. However, they are separate applications, and the NRC has not been asked by the cask vendor to review whether the Standardized NUHOMS can be transported in the NUHOMS MP187 transportation overpack.

The issue of whether a utility should consider the transportability of dry storage casks is beyond the scope of this rulemaking.

I.4. Comment. One commenter citing a report given at the HLW Conference at Las Vegas, 1990, "Integrated Spent Fuel Storage and Transportation Systems using NUHOMS" by PNFSI, states on page 671: "While subsequent transfer of an intact DSC from a NUHOMS on site transfer cask directly to an OCRWM rail/barge is feasible, this method of transfer is not preferred since the assemblies would be oriented top down and the DSC bottom shield plug and grapple ring assembly would be orientated top up, thus complicating the canister opening and fuel handling process at the MRS or geologic repository following shipment." Has NRC evaluated this situation? Has it been rectified?

Response. Since the cask vendor applied for certification of the Standardized NUHOMS only as a storage cask under 10 CFR Part 72, transportation of this cask is not a subject of this rulemaking. Therefore, the NRC review of the standardized NUHOMS did not consider the particular transportation problem described in the comment.

J. Several commenters supported the rule stating that it is beneficial to the NRC and licensees, and is consistent with NRC's direction to avoid

unnecessary site-specific licensing reviews. Others disagreed and asked specific questions about NRC's approval and oversite process.

J.1. Comment. One commenter stated that the NRC statement "The proposed rule will not have adverse effect on public health and safety" cannot be guaranteed and, therefore, even though it may be convenient for the nuclear industry and the NRC to avoid site specific approvals, in this case these are essential for maintaining public safety. Another commenter following the same theme questioned how the following determination was made; "this cask, when used in accordance with the conditions specified in the Certificate of Compliance and NRC regulations, will meet the requirements of 10 CFR Part 72; thus, adequate protection of the public health and safety would be ensured."

Response. Dry storage casks approved by the NRC for use under the general license are of a robust design that relies on generic cask features to assure protection of the public health and safety. Additional NRC site-specific approvals are unnecessary, and NRC oversight and inspections are sufficient in general to assure general licensees implement NRC conditions on cask use. If specific concerns are raised, NRC also has the authority to look into them and respond as necessary to protect public health and safety. The NRC has established specific requirements in 10 CFR Part 72 that must be met in order to obtain a Certificate of Compliance for a cask. The details of the review and basis for the NRC concluding that the cask meets the requirements of 10 CFR Part 72 are provided in the SER. The goal of dry cask storage technology is to store spent fuel safely. That goal, and the effectiveness of the technology, previously has been demonstrated empirically and experimentally. Different cask designs may require different types of analysis to demonstrate their safety, and therefore different review methods

may be appropriate to reach that conclusion. In each case, the level of review performed is that needed to provide assurance of adequate protection of the public health and safety.

J.2. Comment. Several commenters expressed concern over the exemption to 10 CFR 72.234(c) granted to VECTRA to begin transfer cask fabrication (but not use) "to have the necessary equipment available for use by Davis-Besse Nuclear Power Station (DBNPS) in mid-1995, and thus enable DBNPS to maintain complete full-core off-load capability in its spent fuel pool following the refueling outage scheduled for early 1996." One commenter said that seeking public comment and providing comments is an exercise in futility because cask approval seems to be fait accompli. Another commenter wants no exemptions to fabricate before certification to be allowed stating that problems have developed when all these exemptions are allowed.

Response. The NRC granted VECTRA's request for an exemption to fabricate the transfer cask before issuance of the Certificate of Compliance under its NRC approved quality assurance program. NRC's exemption decision made a special effort to make clear that fabrication was entirely at VECTRA's financial risk and did not assure favorable consideration of VECTRA's application. The NRC's finding, based on the SAR for the Standardized NUHOMS and the NRC's SER, concluded that beginning fabrication prior to the issuance of the Certificate of Compliance would pose no undue risk to public health and safety. Use of the transfer cask is dependent on satisfactory completion of NRC's certification process.

The NRC staff carefully considers the public comments received in rulemakings to determine if changes are needed to the proposed rule. As noted elsewhere in this notice, several public comments received in this and other

cask-approval rulemakings have resulted in changes to the SER and the Certificate of Compliance. For this reason, the public comments provide useful inputs to the NRC's safety approval process.

J.3. Comment. One commenter wanted a Regulatory Guide outlining the requirements of a SAR for cask certification (CSAR). Requirements for a CSAR have not been clarified. Specific criteria for a TR (TSAR) by a vendor for a generic Certificate of Compliance need to be set.

Response. Regulatory Guide 3.61, "Standard Format and Content for a Topical Safety Analysis Report for a Spent Fuel Dry Storage Cask," dated February 1989 provides guidance for the preparation of a TSAR. Regulatory Guide 3.62, " Standard Format and Content for the Safety Analysis Report for Onsite Storage of Spent Fuel Storage Casks," dated February 1989 provides guidance in preparing an SAR locating an ISFSI at a reactor site. Both Regulatory Guides identify similar information that can be potentially useful to perspective applicants for cask certification.

J.4. Comment. One commenter wanted to know why Pacific Nuclear divested itself of any ownership or relationship to the VSC design in January 1992. How does this affect proprietary material shared in these two closely related designs? How does it affect their relationship to the DOE MPC system?

Response. The key individual involved in the design and development of the VSC-24, who was also involved in the design and development of the NUHOMS design left Pacific Nuclear and formed a new company, Pacific Sierra Nuclear, for the commercial manufacture and marketing of the VSC-24 storage system. The NRC has experienced no difficulty obtaining the required safety information, including proprietary information, or answers to its questions from either firm, either before, or after divestiture. The NRC is

not aware of any relationship between the vendors. In addition, NRC fully reviewed the health and safety aspects of each vendor's cask design independently; it did not rely on any assumed relationship between the two vendors. Concerning their relationship to the DOE MPC system, each vendor has to establish its own relationship with DOE.

J.5. Comment. One commenter wanted to know how long any model of NUHOMS has been used and if fuel has been taken out and evaluated. Has the 24P or 52B ever been used anywhere and for how long? If not, this is a test of a new cask at a reactor site.

Response. The NUHOMS-24P is being used at Duke Power Company, Oconee Nuclear Station under a site-specific license issued January 29, 1990, and at Baltimore Gas and Electric Company, Calvert Cliffs Nuclear Station under a site-specific license issued November 25, 1992. Monitoring and surveillance of the system is being performed under the conditions of the site-specific license. However, there has been no need for fuel to be removed for evaluation.

The NUHOMS-52B has not been used as yet. Pre-operational testing of the first cask system put in place under the general license are to be performed in accordance with Attachment A, Conditions for Systems Use of the Certificate of Compliance. Monitoring and surveillance of the system will be performed under the conditions of the Certificate of Compliance.

The first use of the Standardized NUHOMS-52B will not place plant workers, the public, or the environment at risk. Conditions of use for the Standardized NUHOMS-52B ensure adequate safety of the workers, the public, and the environment. The Standardized NUHOMS-52B has been designed and will be fabricated to well established criteria of the ASME B&PV and ACI codes. It

uses construction materials which have well known and documented properties to provide the necessary structural strength and radiation shielding to meet regulatory requirements. While the Standardized NUHOMS-52B, is not identical to the NUHOMS-24P, many parallels in design and function can be drawn to demonstrate that the Standardized NUHOMS-52B will perform as intended.

J.6. Comment. One commenter stated that even though dry cask storage passes all NRC rules and is one of the least expensive methods it would seem that a different location or more expensive storage method is worth lives,resources, and property.

Response. Based on numerous NRC reviews and growing experience with dry storage cask technologies, NRC has concluded that spent fuel can be safely stored in dry casks without significant risk to the public health and safety. More expensive storage techniques or alternative storage locations would not provide any significant additional public protection. Further, the storage location is a matter of Congressional policy as reflected in Section 218(a) of the Nuclear Waste Policy Act of 1982, which includes the following directive: "The Secretary [of DOE] shall establish a demonstration program in cooperation with the private sector, for the dry storage of spent nuclear fuel at civilian nuclear power reactor sites, with the objective of establishing one or more technologies that the [Nuclear Regulatory] Commission may, by rule, approve for use at the sites of civilian nuclear power reactors without, to the maximum extent practicable, the need for additional site-specific approvals by the Commission." Section III(a) also finds that the generators of the spent fuel have the primary responsibility to provide for the interim storage of the spent fuel until it is accepted by the DOE.

The type of spent fuel stored in the dry cask storage systems is one

factor that allows the cost of the systems to be lower. Also, because the fuel has cooled a number of years, passive cooling can be used rather than active cooling as is required for fuel just removed from the reactor. Passive cooling by nature reduces the cost by not having active components such as pumps, heat exchanger, water filters, and the maintenance required for these components.

J.7. Comment. One commenter opposed licensing any dry storage cask system other than the DOE multi-purpose canister (MPC) because it minimizes handling individual fuel assemblies, standardizes compatibility between storage sites and DOE, and cost reduction. Multiple cask designs lead to less expertise in production, operation and accident management. Federal Regulations need to be amended to mandate only the use of the MPC.

Response. The DOE MPC system will not be available for general use until well after 1997. In the meantime, additional storage capacity is needed now at several reactor sites. Once the MPC is available for general use, most utilities may well use it. However, given the demonstrated and immediate need of some reactors for an additional storage capacity, and given NRC's responsibility to implement dry cask storage under a general license pursuant to NWPA of 1982, it would not be prudent for NRC now to require use of MPC designs that DOE has not yet approved.

We also do not agree that the number of cask designs has a significant effect on the level of expertise available because, standard engineering and scientific skills such as mechanical and civil engineers, and health safety specialists can be hired as needed.

K. Several commenters had concerns about decommissioning issues.

K.1. Comment. One commenter, citing the draft SER, stated that decommissioning and decontamination of reactors and reactor sites remain uncertain at best. "At this time, it is not known whether demolition and removal of the HSM can be performed by conventional methods...The reinforced structure of the HSM, for example, will require considerable effort to demolish." Of course, in its typical fashion of putting off until tomorrow what it cannot deal with today, the NRC considers "ease of decommissioning (a) secondary consideration."

Response. The demolition of the HSM will be more difficult than a typical building due to the large amount of reinforced steel it contains. However, it is technically feasible and represents a likely level of effort similar to that required to demolish a bank vault. Bank vaults are routinely demolished without extraordinary effort. The HSM may become slightly radioactive due to being exposed to a neutron radiation field during the spent fuel storage period. This would require some containment during demolition to prevent the spread of contamination. Recognizing this the NRC considers decommissioning a secondary consideration compared to the safety afforded by storage of spent fuel in dry casks.

K.2. Comment. One commenter questioned how, where to, and when the spent fuel and casks will go? How does the decommissioning of NUHOMS affect the reactor decommissioning plan if no repository is sited and the pool must remain open? Another commenter expressed concern that after the operating facility has been decommissioned, the spent fuel pool may not be available for use in recovery of a breached DSC.

Response. The Commission determined in the Waste Confidence decisions that sufficient repository capacity will be available in the first

quarter of the 21st century, to accept spent fuel that is already in storage or that will be generated during the lifetime of the reactor licensed by NRC. In addition, the Commission determined that spent fuel can be safety stored at reactors until such time as it is disposed. The bases for these determinations are extensively discussed in the Waste Confidence decisions (54 FR 39765; 49 FR 34658) and remain applicable today.

To operate the dry spent fuel storage area under the provisions of the general license, a license to possess or operate a nuclear power reactor under 10 CFR Part 50 is required. If the reactors were decommissioned and its license terminated, and if the spent fuel were to remain on site, a specific license issued under § 72.40 would be required. At the time of application for a specific license and before the Part 50 license was terminated, the licensee would have to address the subject of how the fuel will be repackaged for shipment to an MRS or repository (since none of the casks now listed in § 72.214 are approved for transportation). Decommissioning and termination of a Part 50 license for a given reactor site must take into account the proper disposal of any spent fuel.

L. A number of positive and negative comments, were received about the application of § 72.48 or Certificate of Compliance item nine to general licensees.

L.1. Comment. Several commenters questioned the application of § 72.48 to Certificate of Compliance holders for use by a general licensee. Commenters believe that this regulation is being inappropriately applied to general licensees and cask vendors. The commenters believe that the regulation was intended to apply to site-specific licenses issued under

§ 72.40 only. One commenter cited the parallel application of § 50.59 to 10 CFR Part 50 licensees. Any changes to the Certificate of Compliance and the supporting SAR and SER need public input using the rulemaking process. Who would make the decisions in using the terms "unreviewed safety questions," "significant increase" and "significant environmental impact"? Other commenters liked this addition stating that non-safety significant changes can be made in a timely and cost effective manner. Several commenters supported the incorporation of item number 9 (§ 72.48 type language) in the draft Certificate of Compliance. One commenter wanted similar provisions made for general license holders with record keeping requirements applicable to the general license rather than the certificate holder. Changes requiring an amendment to the certificate should be initiated by the certificate holder only.

Response. NRC will not allow changes in the Certificate of Compliance under § 72.48. However, the general licensee may make changes in the SAR under § 72.48 unless it involves an unreviewed safety question or a significant increase in occupational exposure or a significant unreviewed environmental impact. The general licensee must make the determinations in the first instance, that are necessary for application of § 72.48. The licensee must also retain its evaluations on its records (which are subject to NRC review).

Supporting this application of § 72.48 to the general license are the words of 10 CFR 72.48(a)(1) which provides as follows: The holder of a license issued under this part may: (i) Make changes in the ISFSI . . . described in the Safety Analysis Report, . . . (iii). . .without prior Commission approval, unless the proposed change, test or experiment involves a

change in the license conditions incorporated in the license, an unreviewed safety question, or a significant unreviewed environmental impact. Also, supporting the interpretation is 10 CFR 72.210 which provides as follows: A general license is hereby issued for the storage of spent fuel in an independent spent fuel storage installation at power reactor sites to persons authorized to possess or operate nuclear power reactors under Part 50 of this chapter. The staff is considering a rulemaking to amend NRC regulations to explicitly state that § 72.48 applies to general licensees.

L.2. Comment. One commenter stated that the code is silent on how a vendor can change a cask SAR and certificate after the final rule. It should be made clear for the vendor that this cask SAR (CSAR) is generic for all US sites. All seismic, control component, distance, changes in length and weight, changes in transfer devices, etc., need to be clearly defined in the proposed rulemaking for the cask and the CSAR before public comment. Who would be liable if a utility requested the vendor to change a cask certified design?

Response. The cask vendor can apply to the NRC for a change to the cask certificate and SAR after the final rule. The vendor must propose the generic revisions to the certificate and SAR and request NRC review of the proposed revision. The NRC will evaluate the proposed revision in an SER, and if appropriate, prepare a draft revised Certificate of Compliance. These documents would then be placed in the NRC Public Document Room and a proposed rule would be published requesting public comments on the proposed revised Certificate of Compliance. After consideration of public comment (and assuming an appropriate basis exits), a final rule would be published incorporating the revision in the revised Certificate of Compliance.

The SAR (CSAR) is not necessarily generic for all U. S. operating reactor sites as the comment appears to suggest. Rather, the SAR is pertinent for those sites having parameters that are incorporated by the cask design bases analyzed in the SAR. From a practical standpoint, it is difficult for a cask vendor to foresee all possible combinations of seismic, control component, distance, changes in length and weight, changes in transfer devices, etc., when it submits its initial application for approval; revisions are expected. The vendor is responsible for the certified cask design.

L.3. Comment. One commenter wanted an explanation of not allowing buyer substitution of material for a Certificate of Compliance and that such references should be deleted from fabrication specifications and drawings. Does this mean that no changes in any materials are allowed once the design is certified? If so, explain this in reference to new models of the VSC-24 as far as materials, coatings, etc.?

Response. Under 10 CFR Part 72 the licensee is permitted to make changes in the ISFSI as described in the SAR provided that the changes do not involve an unreviewed safety question. The licensee and cask certificate holder must have a quality assurance (QA) program that provides control over activities affecting quality of the identified structures, systems, and components to an extent commensurate with the importance to safety and to ensure conformance with the approved design. The NRC does not want buyers (which may not be the licensee or certificate holder), of cask materials, to automatically be able to substitute material without the necessary safety evaluations. Rather, the licensee, through the cask certificate holder, has the ultimate responsibility for approving any changes to ensure conformance with the approved design. For structures, systems, and components identified

as important to safety, if alternate materials are desired to be used and those specific materials form the basis of the safety evaluation, then it would be appropriate to identify those materials in the cask application. Alternatively, the certificate holder may seek an amendment to the SAR and, if necessary, a change to the Certificate of Compliance. For other structures, systems, or components that are needed for the design to be used or are otherwise prudent, but do not perform a safety function and were not relied upon in the basis for design approval, then appropriate changes may be permitted provided the licensee and the Certificate of Compliance holder document the appropriate evaluations and use their quality assurance programs to implement the change. New models of the VSC-24 casks are not the subject of this rulemaking.

L.4. Comment. One commenter questioned how the draft Environmental Assessment and Finding of No Significant Impact would remain valid if changes to cask design and procedures can be made. Test or experiments could be conducted under draft Certificate of Compliance Item No. 9 (see also § 72.48) leading to the use of a cask that does not meet the conditions specified in the Certificate of Compliance. These changes may adversely impact site specific public health, safety and the environment.

Response. Given the limiting criteria of § 72.48, it is unlikely that any change would materially change the environmental analysis. The licensee's authority under § 72.48 does not permit any changes that involve unresolved safety issues, changes to the conditions for cask use in the Certificate of Compliance, significant increase in occupational exposure, or significant environmental impact. In the Environmental Assessment supporting this rulemaking to approve the Standardized NUHOMS, the staff evaluated

various types of accidents that could happen to the ISFSI facility. The staff's evaluation encompassed design basis accidents and concluded that no radioactive material will be released to the environment. The staff also evaluated a worst-case accident and found that the environmental impact is insignificant. Therefore, it is unlikely that the potential impact from changes to cask design or test or experiment under the control of the licensee would introduce new environmental considerations or impacts that differ from or exceed those as analyzed in the Environmental Assessment. Changes in environmental impacts, as a result of changes to the cask design or procedures, must be evaluated by the licensee. The licensee's evaluations are available for inspection by the NRC.

M. A number of technical clarifications and editorial issues were raised.

M.1. Comment. One commenter stated that both SAR and SER on which the Certificate of Compliance is based should be dated as was the case for the VSC-24 Certificate of Compliance. If not, the public will be commenting on an unfinished document that can be endlessly revised.

Response. The draft SER is dated November 1993 and the SAR is dated November 1993. Both of these documents were revised based on public comments.

M.2. Comment. One commenter wanted page 1 of the Certificate of Compliance revised to change the name "Pacific Nuclear" to "VECTRA."

Response. The Certificate of Compliance has been revised to reflect this.

M.3. Comment. One commenter pointed out a typographical error on page

A-19 of the draft Certificate of Compliance. In the Basis paragraph, the sentence starting, "Acceptable damage may occur..." should read "Unacceptable damage may occur..."

Response. The Certificate of Compliance has been revised to clarify this.

M.4. Comment. One commenter requested clarification of Technical Specification 1.2.16 on page A-25 of the draft Certificate of Compliance, as to whether the Yearly Average Ambient Temperature, is a surveillance requirement or an action statement. It is unclear what action should be taken if either of the two specified limits (Yearly average temperature <70F or average daily ambient temperature <100F) is exceeded.

Response. The Yearly Average Ambient Temperature specification is a site-specific parameter which the user must verify in accordance with the requirement of §72.212(b)(3) in order to use the system under the general license. There is no surveillance requirement or further action to be taken.

Certificate of Compliance Section 1.1.1, "Regulatory Requirements for General License," also includes verification of some of the same site-specific temperature parameters and has been amended to include the 100° F or less average daily ambient temperature parameter. Therefore, this specification mentioned in the comment (Draft Certificate of Compliance Section 1.2.16) was deleted.

M.5. Comment. Apparently in reference to a December 4, 1991, letter from PNFSI that stated " The NUHOMS Certification Safety Analysis Report (CSAR) was...," one commenter believed that the use of the term CSAR was a good idea and should have been used by the NRC. The utility SAR should be called SAR as it was and the vendor SAR should be called CSAR just as NUHOMS

did in 1990. Also, the acronyms topical report (TR), TSAR, and SAR are being used interchangeably and they need clear definition. This would eliminate confusion on the issue by those involved.

Response. The staff generally agrees with the comment. However, the required documents that form the basis of the staff's safety review are clearly identified in the SER and Certificate of Compliance.

M.6. Comment. One commenter wanted the term "certificate holder" eliminated because it is ambiguous and misleading.

Response. The term "certificate holder" has been changed to "holder of a cask Certificate of Compliance" to be consistent with the regulations.

M.7. Comment. One commenter wanted the draft Certificate of Compliance clarified as to who is responsible for the use of seismic restraints at each reactor site, the vendor or the utility citing the ambiguous term "certificate holder."

Response. The utility is responsible for determining the need for seismic restraints in the spent fuel building based on site seismic conditions (Certificate of Compliance, Section 1.2.17) .

M.8. Comment. Several commenters stated that the limits on both neutron and gamma emission rates as well as neutron and gamma spectra (Attachment A, Section 1.2.1 of draft Certificate of Compliance) results in excluding some fuel assemblies which would actually produce lower dose rates. The problem for fuel qualification stems from the fact that the neutron dose rate does not decrease as rapidly as the gamma dose rate during cooling because of the longer lived isotopes. Thus, a high burned fuel assembly excluded on the basis of high neutron source term may remain excluded even

though with extra cooling time the combined neutron/gamma dose rate could be less than the design basis case. Some fuel may not qualify due to exceeding the spectra requirements even though the energy groups exceeding the limits may not be significant contributors to the dose rates. Combined neutron/gamma dose rates are the real concern, it is recommended that the limits on source term be replaced by limits based on dose equivalence. The fuel specification should allow other combinations of fuel enrichment, burnup, and cooling time that would not result in exceeding the fuel cladding temperature or dose rates.

Response. The staff agrees that alternative fuel specifications could be beneficial. However, this commenter did not provide a specific alternative, and the staff has not evaluated any other alternative at this time. Also, VECTRA did not include this approach in the SAR. Therefore, no other approach is considered for this rulemaking.

M.9. Comment. One commenter suggested wording changes to the draft Certificate of Compliance, Attachment A, Section 1.2.6 Action b as follows: "Visually inspect placement of top shield plug. Re-install or adjust position of top shield plug if it is not properly seated." The commenter also proposed wording changes to Action c, of the same section, as follows: "Install additional temporary shielding or implement other ALARA actions, as appropriate."

Response. The staff agrees with the first comment and has added the suggested words to Certificate of Compliance, Section A.1.2.6, Action b. It is not necessary to change Action c because 10 CFR Part 20 ALARA already applies to these activities.

M.10. Comment. One commenter wanted draft Certificate of Compliance,

Attachment A, Section 1.2.6, Action d deleted. The user should be permitted to analyze and document higher dose rates under 10 CFR 72.48, which is available for NRC review. Another commenter wanted entire the specification 1.2.6 of Attachment A to the draft Certificate of Compliance deleted. Given that HSM dose rates are specified, a specification for DSC dose rates is not necessary since only the workers involved in the canister closure operations are affected by them and they are already covered by the reactor radiation protection program. One commenter wanted draft Certificate of Compliance, Attachment A, Section 1.2.11 deleted. Given that HSM dose rates are specified, a specification for Transfer Cask dose rates is not necessary since only the workers involved are affected, not the general public. The commenter continues, if the section cannot be deleted the action statement should be revised to read as follows: "If specified dose rates are exceeded, place temporary shielding around the affected areas of the transfer cask or implement other ALARA actions, as appropriate. Review the plant records of the fuel assemblies which have been placed in the DSC to ensure they conform to the fuel specifications of Section 1.2.1. The report to the NRC should be deleted with the user being able to analyze and document the higher dose rates under 10 CFR 72.48, which is available for NRC review.

Response. The dose rate limits are for design purposes. The dose rate is limited to ensure that the DSC has not been inadvertently loaded with fuel not meeting the vendor/applicant spent fuel specifications. NRC will require reporting if the specified dose limits are exceeded. For reasons discussed above, the NRC cannot accommodate the above requests.

M.11. Comment. One commenter stated that the requirement for a dissolved boron concentration in the DSC of 2000 ppm is in excess of the 1810

ppm site-specific license. The 1810 ppm dissolved boron is sufficient to ensure reactivity below 0.95 K-eff (95/95 tolerance level with uncertainties) assuming 24 fresh fuel assemblies. For the unlikely worst case with water density- 0.2 to 0.7 gm/cc (a condition not achievable for fresh fuel)-, reactivity remains below 0.98 K-eff. The pool dissolved boron verification measurement frequency should be changed from not to exceed 48 hours to once per month to be consistent with 10 CFR Part 50 requirements.

Another commenter stated that the NUHOMS-24P canister was designed using burnup credit, the basis for licensing is "credit for soluble boron." The burnup-enrichment curve requirement (Figure 1-1, draft Certificate of Compliance) should be removed until the time that NRC accepts burnup credit and the pool boron specification (Section 1.2.15, draft Certificate of Compliance) is removed.

The NRC has not yet approved the use of burnup credit in criticality analyses for spent fuel storage and transportation casks. The applicant did however analyze credit for burnup as an alternate design acceptance basis for the NUHOMS-24P DSC, pending further consideration of burnup credit by NRC. As discussed in the SER, the NUHOMS-24P DSC criticality safety is approved based on, among others, the key assumptions of loading with irradiated fuel assemblies with equivalent enrichment <1.45 w% U-235, misloading unirradiated fuel with maximum enrichment of 4.0 wt% U-235, and soluble boron in water for wet loading and unloading. The NRC considers the use of the burnup-enrichment curve, Certificate of Compliance, Figure 1-1, as a fuel selection criteria, to be prudent. Its use adds additional unanalyzed conservatism in the criticality safety margin. It is comparable to previous NUHOMS-24P approvals. Its use would also be consistent with the requirement that storage cask

designs be, to the extent practicable with removal of the stored spent fuel from the reactor site, transportation, and ultimate disposition by DOE. Therefore, the NRC disagrees with the commenters requested to allow Standardized NUHOMS-24P users the option of using these burnup-enrichment curve.

Response. The comment appears to refer to the use of a NUHOMS 24P associated with a site-specific license. The "standardized NUHOMS 24P and 52B" are the subject of this general rule making and should not be confused with a site license. The SER for this rulemaking is clear about conditions for use, i.e., 2000 ppm boron concentration is required to ensure that the k_{eff} remains below 0.95. The SAR for this rulemaking does not request, nor does the SER grant, exemption from the requirement of k_{eff} = 0.95 for all accident conditions, including misloading of 24 unirradiated fuel assemblies and optimum moderation density.

The NRC has not yet approved the use of burnup credit in criticality analyses for spent fuel storage and transportation casks. The applicant did however analyze credit for burnup as an alternate design acceptance basis for the NUHOMS-24P DSC, pending future acceptance of burnup credit by NRC. As discussed in the SER, the NUHOMS-24P DSC criticality safety is approved based on, among others, the key assumptions of loading with irradiated fuel assemblies with equivalent enrichment <1.45 w% U-235, misloading unirradiated fuel with maximum enrichment of 4.0 w% U-235, and soluble boron in water for wet loading and unloading. The NRC considers the use of the burnup-enrichment curve, Certificate of Compliance Figure 1-1, as a fuel selection criteria, to be prudent. Its use adds additional unanalyzed conservatism in the criticality safety margin. It is comparable to previous NUHOMS-24P approvals.

Its use would also be consistent with the requirement that storage cask designs be, to the extent practicable, compatible with removal of the stored spent fuel from the reactor site, transportation, and ultimate disposition by DOE. Therefore, the NRC disagrees with the commenters request to allow Standardized NUHOMS-24P users the option of using thee burnup-enrichment curve.

M.12. Comment. Several commenters stated that the listing of specific fuel types in the draft Certificate of Compliance is overly restrictive. Allowance should be made for very similar fuel types or a "fuel qualification table" as proposed by the vendor should replace the listing.

Response. The NRC agrees that allowance should be made for very similar types of fuel to be stored. The Certificate of Compliance provides this flexibility. The "fuel qualification table" consideration at this time is not subject to this rulemaking.

M.13. Comment. One commenter citing the first paragraph of page A-27 of the draft Certificate of Compliance states that the postulated adiabatic heatup would result in concrete temperatures being exceeded in approximately 40 hours. As a result, it is appropriate and conservative to perform the visual surveillance to verify no vent blockage on a daily basis to ensure that a blockage existed for less than 40 hours. The last sentence in the first paragraph should reflect that the module needs to be removed from service if it cannot be established that the blockage is less than 40 hours, not 24 hours. A 24 hour surveillance interval will adequately verify this. One commenter cited an inconsistency in Section 3 of the draft Certificate of Compliance. Section 3.1 indicates that a module must be removed from service of a vent blockage is in existence for greater than 24 hours. Surveillance

Section 1.3.2 indicates that a module must be removed from service if the concrete accident temperature criteria has been exceeded for greater than 24 hours. A vent blockage for less than 24 hours would not cause the temperature limit to be exceeded, as explained in Section 1.3 and the objective for the 24 hour frequency required by surveillance 1.3.1. The apparent conflict between Section 1.3 and the action for Surveillance Requirement 1.3.2 should be resolved. It appears that Surveillance Actions 1.3.2. Actions are appropriate.

Response. The Certificate of Compliance has been clarified to reflect the comment.

M.14. Comment. One commenter stated that Section 1.2.14 to Attachment A of the draft Certificate of Compliance is unnecessary because the time to transfer the DSC from the transfer cask to the HSM would normally require less than eight hours. During this time, even with temperatures above 100 degrees F without the solar shield, any increase in fuel clad temperature and neutron shield temperature would be small and therefore not detrimental. Additionally, the transfer cask is open to the atmosphere and would not pressurize.

Response. The vendor, VECTRA, has proposed this limiting condition of operation in lieu of showing what detrimental effect might occur on the cladding or neutron shield, should the ambient conditions involve temperatures above 100°F. The NRC concurs with this condition as cited in Attachment A, Section 1.2.14 of the Certificate of Compliance.

N. Several commenters raised safeguards/sabotage issues.

N.1. Comment. Another commenter cited the World Trade Center bombing

and the ease with which a disturbed individual recently breached security and remained undetected at a U.S. reactor. Explosive technology has become very sophisticated in the last 15 years since the NRC and Sandia Laboratories studied the effect of sabotage on shipping casks in the March 1979 NUREG-459 - "Generic Adversary Characteristics Summary Report." Another commenter made reference to an experiment with balloons which failed. Yet another commenter questioned the degree of protection in the spent fuel pool versus dry cask storage; will the cask be in a vital area; will safeguards be reviewed as part of the security plan; and what is the effect on the security of these casks.

Response. The NRC reviewed potential issues related to possible radiological sabotage of storage casks at reactor site ISFSIs in the 1990 rulemaking that added Subparts K and L to 10 CFR Part 72 (55 FR 29181). NRC regulations in 10 CFR Part 72 establish physical protection and security requirements for an ISFSI located within the owner controlled area of a licensed power reactor site. Section 72.212(b)(5) requires that spent fuel in the ISFSI be protected against the design basis threat for radiological sabotage using provisions and requirements comparable to those used for protection of spent fuel at the associated reactor, subject to certain additional conditions and exceptions described in 10 CFR 72.212. Each utility licensed to have an ISFSI at its reactor site is required to develop security plans and install a security system that provides high assurance against unauthorized activities which could constitute an unreasonable risk to the public health and safety. The security systems at an ISFSI and its associated reactor are similar in design features to ensure the detection and assessment of unauthorized activities. Alarm annunciations at the ISFSI are monitored by the security alarm stations at the reactor site. Response to intrusion is

required. Each ISFSI is periodically inspected by NRC and annually audited by the licensee to ensure that the security systems are operating within their design limits. The validity of the threat is continually reviewed, with a formal evaluation every six months by the NRC. Currently, the NRC is studying the effects of a truck bomb detonation near dry storage casks.

N.2. Comment. One commenter wanted the emergency plan updated to include initiating events caused by unnatural occurrences, such as sabotage, particularly for this fuel storage option. Whether specifically for the Davis-Besse site this means upgraded or new security barriers is for the NRC to determine.

Response. Under 10 CFR 72.212 requirements, each general licensee must protect the spent fuel against the design basis threat of radiological sabotage. Also, 10 CFR 72.212 requires each general licensee to review the reactor emergency plan to determine if its effectiveness is decreased and if so, prepare the necessary changes and obtain the necessary approvals. Therefore, the comment is already essentially incorporated into NRC regulations.

O. Several commenters had fabrication, quality assurance and inspection concerns.

O.1. Comment. One commenter raised questions about NRC oversight and requirements for proper cask fabrication by licensees. This is based on tests of the faulty welds at the Palisades plant conducted in July just before the cask was filled, but the test was not reviewed.

Response. The ultimate responsibility to ensure proper cask fabrication belongs to the user of the cask. Each Part 50 licensee (general

licensee) must have its own quality assurance (QA) program in place to oversee vendor activities. The QA requirements apply to design, purchase, fabrication, handling, inspection, testing, operation, maintenance, repair, modifications of structures, systems and components, and decommissioning that are important to safety. In addition, certified cask vendors have NRC-approved QA programs that control the implementation of these quality activities in a manner appropriate to the safety significance of these activities. In turn, the general licensee reviews, approves, and oversees its vendor's QA programs and activities. The NRC inspects both the general licensee and the subtiered vendors for compliance with the respective QA program requirements and for the adequacy of the activities performed.

The faulty welds at Palisades in a loaded cask happened because the radiographs were not read initially. If the radiographs were read in a timely manner, the cask should not have been loaded without corrective action first being taken. NRC oversight and involvement in the process contributed to timely detection of the defective cask weld.

0.2. Comment. One commenter wants clarification of the quality assurance program. NRC should have a regulatory guide for vendors, with strong criteria for audits and subcontractors, and NRC inspections of fabricating facilities need to be put in the PDR. How will a subcontractor of NUHOMS vendor be checked by NRC in the future? If a vendor is going to continuously change subcontractors, the NRC should inspect each cask and certainly carefully inspect the vendor QA manual.

Response. Chapters 11 or 13 of Regulatory Guides 3.62 and 3.61, respectively, provide guidance on acceptable quality assurance programs. These chapters state that a QA program meeting the requirements of Appendix B

of 10 CFR Part 50 or Subpart G of 10 CFR Part 72 will be accepted by NRC. Both Part 50 and 72 require an audit program. NRC Branch Technical Position Titled, "Quality Assurance Programs for an Independent Spent Fuel Storage Installations (ISFSI) 10 CFR 72," implements the NRC review of quality assurance programs submitted by applicants. NRC inspection reports are routinely placed in the PDR except for reports containing sensitive information. Inspection reports of NUHOMS fabrication are available in the PDR.

0.3. Comment. One commenter wanted to know if any nonconformances have been discovered in inspection reports of any fabrication of NUHOMS canister. If so, what? How was this resolved? How has the QA program for NUHOMS been reviewed? Is there a manual? How will contractors and subcontractors be checked?

Response. A notice of nonconformance is documented in NRC Inspection Report No. 721004/93-07 dated August 23, 1993. The NRC staff conducted inspections in three phases at Duke Power Company, its contractor, (Pacific Nuclear Fuel Services, Inc.) and subcontractor (Rancor, Inc.) concerning the quality assurance (QA) activities with regard to the NUHOMS-24P dry spent fuel storage canisters. The staff found that implementation of Duke Power Company QA Program was satisfactory, in general; however, certain NRC requirements under 10 CFR Part 72, Subpart G were not met. QA activities cited in the inspection report were documentation of: nonconforming materials, parts or components; quality assurance records; control of purchased material, equipment and services; control of measuring and test equipment; instructions, procedures, and drawings; licensee inspection; and audits. Nonconformance corrective actions were taken and documented by Duke

Power Company. NRC staff found these corrective action acceptable by letters dated January 13, 1994, and April 4, 1994. The corrective actions taken and the implementation of the QA Program are reviewed in periodic inspections by the NRC staff.

The latest version of the QA manual is "VECTRA Technologies, Inc., Quality Assurance Manual," Revision 1, transmitted July 25, 1994, which reflects the corporation's new name and organization, and includes additional changes to update the manual and clarify QA record-keeping commitments. NRC staff found Revision 1 acceptable in its letter dated August 23, 1994. In its review, the staff compared Revision 1 of the VECTRA QA Manual with Revision 3, Edition 2, of the PNSI QA manual which the staff found acceptable by letter dated January 28, 1993.

Contractors and subcontractors of cask vendors (or licensees) are subject of periodic QA inspections performed by the staff.

0.4. Comment. One commenter wanted to know if there is a possible problem, and if there was, how it was resolved, with a material defect in Swagelok tube fittings for NUHOMS?

Response. The NRC is not aware of any material defect problem with Swagelok tube fittings on NUHOMS designs. There is no reliance on the Swagelok fittings as part of the confinement boundary for the NUHOMS canister. The fittings are covered by a metal plate that is welded on after the canister is vacuum dried. Therefore, if there is a failure in the fitting it would be the responsibility of the licensee to repair or replace it so that the DSC can be loaded properly, but its failure would not cause a public health and safety concern.

Finding of No Significant Environmental Impact: Availability

The Commission has determined under the National Environmental Policy Act of 1969, as amended, and the Commission's regulations in Subpart A of 10 CFR Part 51, that this rule is not a major Federal action significantly affecting the quality of the human environment and therefore an environmental impact statement is not required. This final rule adds an additional cask to the list of approved spent fuel storage casks that power reactor licensees can use to store spent fuel at reactor sites without additional site-specific approvals from the Commission. The environmental assessment and finding of no significant impact on which this determination is based are available for inspection at the NRC Public Document Room, 2120 L Street NW. (Lower Level), Washington, DC. Single copies of the environmental assessment and finding of no significant impact are available from Mr. Gordon E. Gundersen, Office of Nuclear Regulatory Research, U. S. Nuclear Regulatory Commission, Washington DC, 20555, telephone (301) 415-6195.

Paperwork Reduction Act Statement

This final rule does not contain a new or amended information collection requirement subject to the Paperwork Reduction Act of 1980 (44 U.S.C. 3501 et seq.). Existing requirements were approved by the Office of Management and Budget approval number 3150-0132.

Regulatory Analysis

The Commission has prepared a regulatory analysis on this regulation. The analysis examines the costs and benefits of the alternatives considered by the Commission. Interested persons may examine a copy of the regulatory analysis at the NRC Public Document Room, 2120 L Street NW. (Lower Level), Washington, DC. Single copies of the analysis may be obtained from Mr. Gordon E. Gundersen, Office of Nuclear Regulatory Research, U. S. Nuclear Regulatory Commission, Washington DC, 20555, telephone (301) 415-6195.

Regulatory Flexibility Certification

As required by the Regulatory Flexibility Act of 1980, 5 U.S.C. 605(b), the Commission certifies that this rule does not have a significant economic impact on a substantial number of small entities. This rule affects only licensees owning and operating nuclear power reactors and cask vendors. The owners of nuclear power plants do not fall within the scope of the definition of "small entities" set forth in Section 601(3) of the Regulatory Flexibility Act,15 U.S.C. 632, or the Small Business Size Standards set out in regulations issued by the Small Business Administration at 13 CFR Part 121.

Backfit Analysis

The NRC has determined that the backfit rules 10 CFR 50.109 and 10 CFR 72.62 do not apply to this final rule. A backfit analysis is not required for this final rule because this amendment does not involve any provisions which would impose backfits as defined in §§ 50.109(a)(1) or 72.62(a).

List of Subjects in 10 CFR Part 72

Manpower training programs, Nuclear materials, Occupational safety and health, Reporting and recordkeeping requirements, Security measures, Spent fuel.

For the reasons set out in the preamble and under the authority of the Atomic Energy Act of 1954, as amended, the Energy Reorganization Act of 1974, as amended and 5 U.S.C. 552 and 553, the NRC is adopting the following amendments to 10 CFR Part 72.

PART 72--LICENSING REQUIREMENTS FOR THE INDEPENDENT STORAGE OF SPENT NUCLEAR FUEL AND HIGH-LEVEL RADIOACTIVE WASTE

1. The authority citation for Part 72 continues to read as follows:

AUTHORITY: Secs. 51, 53, 57, 62, 63, 65, 69, 81, 161, 182, 183, 184, 186, 187, 189, 68 Stat. 929, 930, 932, 933, 934, 935, 948, 953, 954, 955, as amended, sec. 234, 83 Stat. 444, as amended (42 U.S.C. 2071, 2073, 2077, 2092, 2093, 2095, 2099, 2111, 2201, 2232, 2233, 2234, 2236, 2237, 2238, 2282); sec. 274 Pub. L. 86-373, 73 Stat. 688, as amended (42 U.S.C. 2021); sec. 201, as amended, 202, 206, 88 Stat. 1242, as amended, 1244, 1246, (42 U.S.C. 5841, 5842, 5846); Pub. L. 95-601, sec. 10, 92 Stat. 2951 as amended by Pub. L. 102-486, sec. 2902, 106 Stat. 3123, (42 U.S.C. 5851); sec. 102, Pub. L. 91-190, 83 Stat. 853 (42 U.S.C. 4332); secs. 131, 132, 133, 135, 137, 141, Pub. L. 97-425, 96 Stat. 2229, 2230, 2232, 2241, sec. 148, Pub. L. 100-203, 101 Stat. 1330-235 (42 U.S.C. 10151, 10152, 1053, 10155, 10157, 10161, 10168).

Section 72.44(g) also issued under secs.142(b) and 148(c), (d), Pub. L. 100-203, 101 Stat. 1330-232, 1330-236 (42 U.S.C. 10162(b), 10168(c), (d)). Section 72.46 also issued under sec. 189, 68 Stat. 955 (42 U.S.C. 2239); sec. 134, Pub. L. 97-425, 96 Stat. 2230 (42 U.S.C. 10154). Section 72.96(d) also issued under sec. 145(g), Pub. L. 100-203, 101 Stat. 1330-235 (42 U.S.C. 10165(g)). Subpart J also issued under secs. 2(2), 2(15), 2(19) 117(a), 141(h), Pub. L. 97-425, 96 Stat. 2202, 2203, 2204, 2222, 2244, (42 U.S.C. 10101, 10137(a), 10161(h). Subparts K and L are also issued under sec. 133, 96 Stat. 2230 (42 U.S.C. 10153) and sec. 218(a), 96 Stat. 2252 (42 U.S.C. 10198).

2. Section 72.214, Certificate of Compliance 1004 is added to read as follows:

§ 72.214. List of approved spent fuel storage casks.

* * * * *

Certificate Number : 1004

SAR Submitted by: VECTRA Technologies, Inc.

SAR Title: Safety Analysis Report for the Standardized NUHOMS Horizontal Modular Storage System for Irradiated Nuclear Fuel, Revision 2

Docket Number: 72-1004

Certification Expiration Date: (20 years after final rule effective date)

Model Numbers: NUHOMS-24P for Pressurized Water Reactor fuel;
NUHOMS-52B for Boiling Water Reactor fuel.

REGULATORY ANALYSIS

ADDITION OF STANDARDIZED NUHOMS TO 10 CFR 72.214

On July 18, 1990 (55 FR 29181), the Commission issued an amendment to 10 CFR Part 72. The amendment provided for the storage of spent nuclear fuel under a general license. Any nuclear power reactor licensee can use these casks if: (1) they notify the NRC in advance, (2) the spent fuel is stored under the conditions specified in the cask's certificate of compliance, and (3) the conditions of the general license are met. In that rulemaking, four spent fuel storage casks were approved for use at reactor sites and were listed in 10 CFR 72.214. That rulemaking envisioned that storage casks certified in the future could be routinely added to the listing in § 72.214 through rulemaking procedures. Procedures and criteria for obtaining NRC approval of new spent fuel storage cask designs was provided in 10 CFR 72.230. Subsequently, two additional casks were added to the listing in § 72.214 in 1993.

The alternative to this proposed action is to withhold certification of this new design and give a site-specific license to each utility that proposed to use the cask. This alternative however, would cost the NRC more time and money for each site-specific review. In addition, withholding certification would ignore the procedures and criteria currently in place for the addition of new cask designs. Further, it is in conflict with NWPA direction to the Commission to approve technologies for the use of spent fuel storage at the sites of civilian nuclear power reactors without, to the extent practicable, the need for additional site reviews. Also, this alternative is anticompetitive in that it would exclude new vendors without cause and would arbitrarily limit the choice of cask designs available to power reactor licensees.

Approval of the proposed rulemaking would eliminate the above problems. Further, the proposed rule will have no adverse effect on the public health and safety.

The benefit of this proposed rule to nuclear power reactor licensees is to make available a greater choice of spent fuel storage cask designs which can be used under a general license. However, the newer cask design may have a market advantage over the existing designs in that power reactor licensees may prefer to use the newer casks with improved features. The new cask vendors with casks to be listed in § 72.214 benefit by having to obtain NRC certificates only once for a design which can then be used by more than one power reactor licensees. Vendors with cask designs already listed may be adversely impacted in that power reactor licensees may choose a newly listed design over an existing one. However, the NRC is required by its regulations and NWPA direction to certify and list approved casks. The NRC also benefits because it will need to certify a cask design only once for use by multiple licensees. Casks approved through rulemaking are to be suitable for use under a range of environmental conditions sufficiently broad to encompass multiple nuclear power plants in the United States without the need for farther site-specific approval by NRC.

This proposed rulemaking has no significant identifiable impact or benefit on other Government agencies.

Based on the above discussion of the benefits and impacts of the alternatives, the NRC concludes that the requirements of the proposed rule are

commensurate with the Commission's responsibilities for public health and safety and the common defense and security. No other available alternative is believed to be as satisfactory, and thus, this action is recommended.

Certificate of Compliance
FOR DRY SPENT FUEL STORAGE CASKS

10 CFR PART 72

1. a. CERTIFICATE NUMBER: 1004
   b. REVISION NUMBER: 0
   c. PACKAGE IDENTIFICATION NUMBER: USA/72-1004
   d. PAGE NUMBER: 1
   e. TOTAL NUMBER OF PAGES: 4

---

2. PREAMBLE This certificate is issued to certify that the cask and contents, described in item 5 below, meet the applicable safety standards set forth in Title 10, Code of Federal Regulations, Part 72,"Licensing Requirements for the Independent Storage of Spent Nuclear Fuel and High-Level Radioactive Waste."

---

3. THIS CERTIFICATE is issued on the basis of a safety analyses report of the cask design, Model No.: Standardized NUHOMS-24P and NUHOMS-52B

a. PREPARED BY (Name and Address)

VECTRA Technologies, Inc. a.k.a.
Pacific Nuclear Fuel Services, Inc.
6203 San Ignacio Avenue, Suite 100
San Jose, CA 95119

b. TITLE AND IDENTIFICATION OF REPORT OR APPLICATION

VECTRA Technologies, Inc., a.k.a
Pacific Nuclear Fuel Services, Inc.
"Safety Analysis Report for the Standardized NUHOMS Horizontal Modular Storage System for Irradiated Nuclear Fuel"

c. DOCKET NUMBER 72-1004

---

4. CONDITIONS This certificate is conditional upon fulfilling the requirements of 10 CFR Part 72, as applicable, and the conditions specified below.

Effective Date:

Expiration Date:

FOR THE NUCLEAR REGULATORY COMMISSION

Attachment E
to Attachment 2
Meeting 266

Charles J. Haughney,
Storage and Transport
Division of Industrial and
Medical Nuclear Safety, NMSS

Certificate of Compliance
FOR DRY SPENT FUEL STORAGE CASKS

10 CFR PART 72

1. a. **CERTIFICATE NUMBER:** 1004
   b. **REVISION NUMBER:** 0
   c. **PACKAGE IDENTIFICATION NUMBER:** USA/72-1004
   d. **PAGE NUMBER:** 1
   e. **TOTAL NUMBER OF PAGES:** 4

2. **PREAMBLE** This certificate is issued to certify that the storage system and contents, described in Item 5, below, meet the applicable safety standards set forth in Title 10, Code of Federal Regulations, Part 72, "Licensing Requirements for the Independent Storage of Spent Nuclear Fuel and High-Level Radioactive Waste."

3. **THIS CERTIFICATE** is issued on the basis of a review of the safety analysis report (SAR) and the determination that the system design meets the applicable requirements of 10 CFR Part 72 as discussed in the staff's Safety Evaluation Report (SER).

SAFETY ANALYSIS REPORT IDENTIFICATION

VECTRA Technologies, Inc., a.k.a. Pacific Nuclear Fuel Services, Inc., Safety Analysis Report for the Standardized NUHOMS Horizontal Modular Storage System for Irradiated Nuclear Fuel.

SAFETY EVALUATION REPORT IDENTIFICATION

Safety Evaluation Report of VECTRA Technologies, Inc., a.k.a. Pacific Nuclear Fuel Services, Inc., Safety Analysis Report for the Standardized NUHOMS Horizontal Modular Storage System for Irradiated Fuel, U.S. Nuclear Regulatory Commission.

4. CONDITIONS

This certificate is conditional upon fulfilling the requirements of 10 CFR Part 72, Subpart L, as applicable, and the conditions specified in below.

5. **CASK**

a. **Model Nos.**: Standardized NUHOMS-24P and NUHOMS-52B

The two digits refer to the number of fuel assemblies stored in the DSC, and the character P for PWR or B for BWR is to designate the type of fuel stored.

b. Description

The Standardized NUHOMS System and its analyses and operations are described in the SAR (Docket 72-1004) identified previously. The Nuclear Regulatory Commission has reviewed the SAR in the Safety Evaluation Report identified previously.

The system which is being certified is described in Sections 1, 3, 4, 5, 6, 7 and 8 of the SAR and in the NRC's SER accompanying the SAR. (The system drawings, which reflect this description, are contained in Appendix E of the SAR.) The Standardized NUHOMS System is a horizontal canister system composed of a steel dry shielded canister (DSC), a reinforced concrete horizontal storage module (HSM), and a transfer cask (TC). The welded DSC provides confinement and criticality control for the storage and transfer of irradiated fuel. The concrete module provides radiation shielding while allowing cooling of the DSC and fuel by natural convection during storage. The TC is used for transferring the DSC from/to the Spent Fuel Pool Building to/from the HSM.

The principal component subassemblies of the DSC are the shell with integral bottom cover plate and shield plug and ram/grapple ring, top shield plug, top cover plate, and basket assembly. The shell length is fuel-specific. The internal basket assembly is composed of guide sleeves, support rods, and spacer disks. This assembly is designed to hold 24 PWR fuel assemblies or 52 BWR assemblies. It aids in the insertion of the fuel assemblies, enhances subcriticality during loading operations, and provides structural support during a hypothetical drop accident. The DSC is designed to slide from the transfer cask into the HSM and back without undue galling, scratching, gouging, or other damage to the sliding surfaces.

The HSM is a reinforced concrete unit with penetrations located at the top and bottom of the side walls for air flow. The penetrations are protected from debris intrusions by wire mesh screens during storage operation. The DSC Support Structure, a structural steel frame with rails, is installed within the HSM module to provide for sliding the DSC in and out of the HSM and to support the DSC within the HSM.

The TC is designed and fabricated as a lifting device to meet NUREG-0612 and ANSI N14.6 requirements. It is used for transfer operations within the Spent Fuel Pool Building and for transfer operations to/from the HSM. The TC is a cylindrical vessel with a bottom end closure assembly and a bolted top cover plate. Two upper lifting trunnions are located near the top of the cask for downending/uprighting and lifting of the cask in the Spent Fuel Pool Building. The lower trunnions, located near the base of the cask, serve as the axis of rotation during downending/uprighting operations and as supports during transport to/from the Independent Spent Fuel Storage Installation (ISFSI).

With the exception of the TC, fuel transfer and auxiliary equipment necessary for ISFSI operations are not included as a part of the Standardized NUHOMS System to be reviewed for a Certificate of Compliance under 10 CFR Part 72, Subpart L. Such equipment may include, but is not limited to, special lifting devices, the transfer trailer, and the skid positioning system.

c. Drawings

The drawings for the dry irradiated fuel storage canister system are contained in Appendix E of the SAR.

d. Basic Components

The basic components of the Standardized NUHOMS System that are important to safety are the DSC, HSM, and TC. These components are described in Section 4.2 of the SAR.

6. Fabrication activities shall be conducted in accordance with a quality assurance program as described in Section 11.0 of the SAR.

7. Notification of fabrication schedules shall be made in accordance with the requirements of 10 CFR 72.232(c).

8. Standardized NUHOMS Systems, which are authorized by this certificate, are hereby approved for general use by holders of 10 CFR Part 50 licenses for nuclear reactors at reactor sites under the general license issued pursuant to 10 CFR 72.210, subject to the conditions specified by 10 CFR 72.212 and the attached Conditions for System Use.

9. **Changes, tests, and experiments**

The holder of this certificate of compliance may:

(1) Make changes in the cask design described in the Safety Analysis Report,

(2) Make changes in the procedures described in the Safety Analysis Report, or

(3) Conduct tests or experiments not described in the Safety Analysis Report,

without prior Commission approval, unless the proposed change, test or experiment involves a change in the Certificate of Compliance, an unreviewed safety question, a significant increase in occupational exposure or a significant unreviewed environmental impact.

A proposed change, test, or experiment shall be deemed to involve an unreviewed safety question:

(1) If the probability of occurrence or the consequences of an accident or malfunction of equipment important to safety previously evaluated in the Safety Analysis Report may be increased; or

(2) If a possibility for an accident or malfunction of a different type than any evaluated previously in the Safety Analysis Report may be created; or

(3) If the margin of safety as defined in the basis for any technical specification or limit is reduced.

The holder of this certificate of compliance shall maintain records of changes in the cask design and of changes in procedures if the changes consititute changes in the cask design or procedures described in the Safety Analysis Report. The holder of this certificate of compliance shall also maintain records of tests and experiments it conducts that are not described in the Safety Analysis Report. These records must include a written safety evaluation that provides the bases for the determination that the change, test or experiment does not involve an unreviewed safety question. The records of changes in the cask design and of changes in procedures and records of tests or experiments must be maintained until the Commission terminates the certificate.

The holder of this certificate of compliance shall annually furnish to the Director, Office of Nuclear Material Safety and Safeguards, U.S. Nuclear Regulatory Commission, Washington, DC 20555, a report containing a brief description of changes, tests, and experiments made under this provision, including a summary of the safety evaluation of each. Any such report submitted by a holder of this certificate of compliance will be made a part of the public record pertaining to this certificate.

The holder of this certificate of compliance who desires:

(1) To make changes in the cask design or the procedures as described in the Safety Analysis Report, or to conduct tests or experiments not described in the Safety Analysis Report, that involve an unreviewed safety question, a significant increase in occupational exposure, or a significant unreviewed environmental impact, or

(2) To change the Certificate of Compliance shall submit an application for amendment of the certificate.

10. Effective Date:

Expiration Date:

FOR THE NUCLEAR REGULATORY COMMISSION

Charles J. Haughney, Chief
Storage and Transport Systems Branch
Division of Industrial and
Medical Nuclear Safety, NMSS

ATTACHMENT A

CONDITIONS FOR SYSTEM USE

CERTIFICATE OF COMPLIANCE

72-1004

TABLE OF CONTENTS

Section		Page
1.0	INTRODUCTION	A-1
1.1	General Requirements and Conditions	A-1
1.1.1	Regulatory Requirements for a General License	A-1
1.1.2	Operating Procedures	A-2
1.1.3	Quality Assurance	A-3
1.1.4	Heavy Loads Requirements	A-3
1.1.5	Training Module	A-3
1.1.6	Pre-Operational Testing and Training Exercise	A-4
1.1.7	Special Requirements for First System in Place	A-4
1.1.8	Surveillance Requirements Applicability	A-5
1.2	Technical Specifications, Functional and Operating Limits	A-5
1.2.1	Fuel Specification	A-5
1.2.2	DSC Vacuum Pressure During Drying	A-11
1.2.3	DSC Helium Backfill Pressure	A-12
1.2.4	DSC Helium Leak Rate of Inner Seal Weld	A-13
1.2.5	DSC Dye Penetrant Test of Closure Welds	A-14
1.2.6	DSC Top End Dose Rates	A-15
1.2.7	HSM Dose Rates	A-16
1.2.8	HSM Maximum Air Exit Temperature	A-17
1.2.9	Transfer Cask Alignment with HSM	A-18
1.2.10	DSC Handling Height Outside the Spent Fuel Pool Building	A-19
1.2.11	Transfer Cask Dose Rates	A-20
1.2.12	Maximum DSC Removable Surface Contamination	A-21
1.2.13	TC/DSC Lifting Heights as a Function of Low Temperature and Location	A-22
1.2.14	TC/DSC Transfer Operations at High Ambient Temperatures	A-23
1.2.15	Boron Concentration in the DSC Cavity Water (24-P Design Only)	A-24
1.2.16	Provision of TC Seismic Restraint Inside the Spent Fuel Pool Building as a Function of Horizontal Acceleration and Loaded Cask Weight	A-25
1.3	Surveillance and Monitoring	A-26
1.3.1	Visual Inspection of HSM Air Inlets and Outlets (Front Wall and Roof Birdscreen)	A-26
1.3.2	HSM Thermal Performance	A-27

LIST OF FIGURES

Figure		Page
1.1	PWR Fuel Criticality Acceptance Curve	A-9

LIST OF TABLES

Table		Page
1-1a	PWR Fuel Specifications of Fuel to be Stored in the Standardized NUHOMS-24P DSC	A-8
1-1b	BWR Fuel Specifications of Fuel to be Stored in the Standardized NUHOMS-52B DSC	A-10
1.3.1	Summary of Surveillance and Monitoring Requirements	A-28

1.0 INTRODUCTION

This section presents the conditions which a potential user (general licensee) of the standardized NUHOMS system must comply with, in order to use the system under the general license in accordance with the provisions of 10 CFR 72.210 and 10 CFR 72.212. These conditions have either been proposed by the system vendor, imposed by the NRC staff as a result of the review of the SAR, or are part of the regulatory requirements expressed in 10 CFR 72.212.

1.1 General Requirements and Conditions

1.1.1 Regulatory Requirements for a General License

Subpart K of 10 CFR Part 72 contains conditions for using the general license to store spent fuel at an independent spent fuel storage installation at power reactor sites authorized to possess and operate nuclear power reactors under 10 CFR Part 50. Technical regulatory requirements for the licensee (user of the standardized NUHOMS system) are contained in 10 CFR 72.212(b).

Under 10 CFR 72.212(b)(2) requirements, the licensee must perform written evaluations, before use, that establish that: (1) conditions set forth in the Certificate of Compliance have been met; (2) cask storage pads and areas have been designed to adequately support the static load of the stored casks; and (3) the requirements of 10 CFR 72.104 "Criteria for radioactive materials in effluent and direct radiation from an ISFSI or MRS," have been met. In addition, 10 CFR 72.212(b)(3) requires that the licensee review the SAR and the associated SER, before use of the general license, to determine whether or not the reactor site parameters (including earthquake intensity and tornado missiles), are encompassed by the cask design bases considered in these reports.

The requirements of 10 CFR 72.212(b)(4) provide that, as a holder of a Part 50 license, the user, before use of the general license under Part 72, must determine whether activities related to storage of spent fuel involve any unreviewed safety issues, or changes in technical specifications as provided under 10 CFR 50.59. Under 10 CFR 72.212(b)(5), the general license holder shall also protect the spent fuel against design basis threats and radiological sabotage pursuant to 10 CFR 73.55. Other general license requirements dealing with review of reactor emergency plans, quality assurance program, training, and radiation protection program must also be satisfied pursuant to 10 CFR 72.212(b)(6). Records and procedural requirements for the general license holder are described in 10 CFR 72.212(b)(7), (8), (9) and (10).

Without limiting the requirements identified above, site-specific parameters and analyses, identified in the SER, that will need verification by the system user, are as a minimum, as follows:

1. The temperature of 70°F as the maximum average yearly temperature with solar incidence. The average daily ambient temperature shall be 100°F or less (Reference SER Section 2.4.1).

2. The temperature extremes of 125°F with incident solar radiation and -40°F with no solar incidence (Reference SER Section 2.4.1) for storage of the DSC inside the HSM.

3. The horizontal and vertical seismic acceleration levels of 0.25g and 0.17g, respectively (Reference SER Table 2-4).

4. The analyzed flood condition of 15 fps water velocity and a height of 50 feet of water (full submergence of the loaded HSM DSC) (Reference SER Table 2-4).

5. The potential for fire and explosion should be addressed, based on site-specific considerations (See SER Table 2-4 and related SER discussion).

6. The HSM foundation design criteria are not included in the SAR. Therefore, the nominal SAR design or an alternative should be verified for individual sites in accordance with 10 CFR 72.212(b)(2)(ii). Also, in accordance with 10 CFR 72.212(b)(3), the foundation design should be evaluated against actual site parameters to determine whether its failure would cause the standardized NUHOMS system to exceed the design basis accident conditions.

7. The potential for lightning damage to any electrical system associated with the standardized NUHOMS system (e.g., thermal performance monitoring) should be addressed, based on site-specific considerations (See SER Table 2.4 and related SER discussion).

8. Any other site parameters or consideration that could decrease the effectiveness of cask systems important to safety.

In accordance with 10 CFR 72.212(b)(2), a record of the written evaluations must be retained by the licensee until spent fuel is no longer stored under the general license issued under 10 CFR 72.210.

1.1.2 Operating Procedures

Written operating procedures shall be prepared for cask handling, loading, movement, surveillance, and maintenance. The operating procedures suggested generically in the SAR were considered appropriate as discussed in Section 11.0 of the SER and should provide the basis for the user's written operating procedure. The following additional procedure requested by NRC staff in Section 11.3 should be part of the user operating procedures:

If fuel needs to be removed from the DSC, either at the end of service life or for inspection after an accident, precautions must be taken against the potential for the presence of damaged or oxidized fuel and to prevent radiological exposure to personnel during this operation. This can be achieved with this design by the use of the purge and fill valves which permit a determination of the atmosphere within the DSC before the removal of the inner top cover plate and shield plugs. If the atmosphere within the DSC is helium, then operations should proceed normally with fuel removal either via the transfer cask or in the pool. However, if air is present within the DSC, then appropriate filters should be in place to preclude the uncontrolled release of any potential airborne radioactive particulate from the DSC via the purge-fill valves. This will protect both personnel and the operations area from potential contamination. For the accident case, personnel protection in the form of respirators or supplied air should be considered in accordance with the licensee's Radiation Protection Program.

1.1.3 Quality Assurance

Activities at the ISFSI shall be conducted in accordance with a Commission-approved quality assurance program which satisfies the applicable requirements of 10 CFR Part 50, Appendix B, and which is established, maintained, and executed with regard to the ISFSI.

1.1.4 Heavy Loads Requirements

Lifts of the DSC in the TC must be made within the existing heavy loads requirements and procedures of the licensed nuclear power plant. The TC design has been reviewed under 10 CFR Part 72 and found to meet NUREG-0612 and ANSI N14.6. (Reference 8). However, an additional safety review (under 10 CFR 50.59) is required to show operational compliance with NUREG-0612 and/or existing plant-specific heavy loads requirements.

1.1.5 Training Module

A training module shall be developed for the existing licensee's training program establishing an ISFSI training and certification program. This module shall include the following:

1. Standardized NUHOMS Design (overview);
2. ISFSI Facility Design (overview);
3. Certificate of Compliance conditions (overview);
4. Fuel Loading, Transfer Cask Handling, DSC Transfer Procedures; and
5. Off-Normal Event Procedures.

1.1.6 Pre-Operational Testing and Training Exercise

A dry run of the DSC loading, TC handling and DSC insertion into the HSM shall be held. This dry run shall include, but not be limited to, the following:

1. Functional testing of the TC with lifting yokes to ensure that the TC can be safely transported over the entire route required for fuel loading, washdown pit and trailer loading.

2. DSC loading into the TC to verify fit and TC/DSC annulus seal.

3. Testing of TC on transport trailer and transported to ISFSI along a predetermined route and aligned with an HSM.

4. Testing of transfer trailer alignment and docking equipment. Testing of hydraulic ram to insert a DSC loaded with test weights into an HSM and then retrieve it.

5. Loading a mock-up fuel assembly into the DSC.

6. DSC sealing, vacuum drying, and cover gas backfilling operations (using a mock-up DSC).

7. Opening a DSC (using a mock-up DSC).

8. Returning the DSC and TC to the spent fuel pool.

1.1.7 Special Requirements for First System in Place

The heat transfer characteristics of the cask system will be recorded by temperature measurements of the first DSC placed in service. The first DSC shall be loaded with assemblies, constituting a source of approximately 24 kW. The DSC shall be loaded into the HSM, and the thermal performance will be assessed by measuring the air inlet and outlet temperatures for normal airflow. Details for obtaining the measurements are provided in Section 1.2.8, under "Surveillance."

A letter report summarizing the results of the measurements shall be submitted to the NRC for evaluation and assessment of the heat removal characteristics of the cask in place within 30 days of placing the DSC in service, in accordance with 10 CFR 72.4.

Should the first user of the system not have fuel capable of producing a 24 kW heat load, or be limited to a lesser heat load, as in the case of BWR fuel, the user may use a lesser load for the process, provided that a calculation of the temperature difference between the inlet and outlet temperatures is performed, using the same methodology and inputs documented in

the SAR, with lesser load as the only exception. The calculation and the measured temperature data shall be reported to the NRC in accordance with 10 CFR 72.4. The calculation and comparison need not be reported to the NRC for DSCs that are subsequently loaded with lesser loads than the initial case. However, for the first or any other user, the process needs to be performed and reported for any higher heat sources, up to 24 kW for PWR fuel and 19 kW for BWR fuel, which is the maximum allowed under the Certificate of Compliance. The NRC will also accept the use of artificial thermal loads other than spent fuel, to satisfy the above requirement.

1.1.8 Surveillance Requirements Applicability

The specified frequency for each Surveillance Requirement is met if the surveillance is performed within 1.25 times the interval specified in the frequency, as measured from the previous performance.

For frequencies specified as "once," the above interval extension does not apply.

If a required action requires performance of a surveillance or its completion time requires period performance of "once per...," the above frequency extension applies to the repetitive portion, but not to the initial portion of the completion time.

Exceptions to these requirements are stated in the individual specifications.

1.2 Technical Specifications, Functional and Operating Limits

1.2.1 Fuel Specification

Limit/Specification:	The characteristics of the spent fuel which is allowed to be stored in the standardized NUHOMS system are limited by those included in Tables 1-1a and 1-1b.
Applicability:	The specification is applicable to all fuel to be stored in the standardized NUHOMS system.
Objective:	The specification is prepared to ensure that the peak fuel rod temperatures, maximum surface doses, and nuclear criticality effective neutron multiplication factor are below the design values. Furthermore, the fuel weight and type ensures that structural conditions in the SAR bound those of the actual fuel being stored.
Action:	Each spent fuel assembly to be loaded into a DSC shall have the parameters listed in Tables 1-1a and 1-1b verified and documented. Fuel not meeting this specification shall not be stored in the standardized NUHOMS system.

Surveillance: Immediately, before insertion of a spent fuel assembly into an DSC, the identity of each fuel assembly shall be independently verified and documented.

Bases: The specification is based on consideration of the design basis parameters included in the SAR and limitations imposed as a result of the staff review. Such parameters stem from the type of fuel analyzed, structural limitations, criteria for criticality safety, criteria for heat removal, and criteria for radiological protection. The standardized NUHOMS system is designed for dry, horizontal storage of irradiated light water reactor (LWR) fuel. The principal design parameters of the fuel to be stored can accommodate standard PWR fuel designs manufactured by Babcock and Wilcox, Combustion Engineering, and Westinghouse, and standard BWR fuel manufactured by General Electric and is limited for use to these standard designs. The analyses presented in the SAR are based on non-consolidated, zircaloy-clad fuel with no known or suspected gross breaches. (See Tables 12-1a and 1b.)

The physical parameters that define the mechanical and structural design of the HSM and the DSC are the fuel assembly dimensions and weight. The calculated stresses given in the staff's SER are based on the physical parameters given in Tables 1-1a and 1-1b and represent the upper bound.

The design basis for nuclear criticality safety is based on the standard Babcock & Wilcox 15x15/208 pin fuel assemblies with initial enrichments up to 4.0 wt.% U-235, and General Electric 7x7 fuel assemblies with initial enrichments up to 4.0 wt.% U-235, for the standardized NUHOMS-24P and NUHOMS-52B designs, respectively. The HSM is designed to permit storage of irradiated fuel such that the irradiated fuel reactivity is less than or equal to 1.45 wt.% U-235 equivalent unirradiated fuel for the NUHOMS-24P design, and less than or equal to 4.0 wt.% U-235 initial enrichment fuel for the NUHOMS-52B design.

The thermal design criterion of the fuel to be stored is that the maximum heat generation rate per assembly be such that the fuel cladding temperature is maintained within established limits during normal and off-normal conditions. Fuel cladding temperature limits were established by the applicant based on methodology in PNL-6189 and PNL-4835 (References 1, 2). Based on this methodology, the staff has accepted that a maximum heat generation rate of 1 kW per assembly is a bounding value for the PWR fuel to be stored, and that

0.37 kW per assembly is a bounding value for the BWR fuel to be stored.

The radiological design criterion is that the gamma and neutron source strength of the irradiated fuel assemblies must be bounded by values of the neutron and gamma ray source strengths used by the vendor in the shielding analysis. The design basis source strengths were derived from a burnup analysis for (1) PWR fuel with 4.0 weight percent U-235 initial enrichment, irradiated to a maximum of 40,000 MWD/MTU, and a post irradiation time of five years; and (2) BWR fuel with 4.0 weight percent U-235 initial enrichment, irradiated to a maximum of 35,000 MWD/MTU, and a post irradiation time of 5 years.

Table 1-1a PWR Fuel Specifications of Fuel to be Stored in the Standardized NUHOMS-24P DSC[1]

Title or Parameter	Specifications
Fuel	Only intact, unconsolidated PWR fuel assemblies with the following requirements
Physical Parameters	
Assembly Length	See SAR Chapter 3
Nominal Cross-Sectional Envelope	See SAR Chapter 3
Maximum Assembly Weight	See SAR Chapter 3[2]
No. of Assemblies per DSC	≤24 intact assemblies
Fuel Cladding	Zircaloy-clad fuel with no known or suspected gross cladding breaches
Thermal Characteristics	
Decay Heat Power per Fuel Assembly	≤1.0 kW (this value is maximum for any given assembly, and may not be averaged for all 24 assemblies)
Radiological Characteristics	
Burnup	≤40,000 MWD/MTU
Post Irradiation Time	≥5 years
Maximum Initial Enrichment	≤4.0 wt. % U-235
Maximum Initial Uranium Content	≤472 kg/assembly
Maximum Initial Equivalent Enrichment	≤1.45 wt. % U-235[3]
Neutron Source Per Assembly	≤2.23E8 n/sec with spectrum bounded by that in Chapter 7 of SAR
Gamma Source Per Assembly	≤7.45E15 photon/sec with spectrum bounded by that in Chapter 7 of SAR

(1) The limiting fuel specifications listed above must be met by every individual fuel assembly to be stored in the standardized NUHOMS-24P system. Any deviation constitutes an Unanalyzed Condition and Violation of the Certificate of Compliance.

(2) Design valid for fuel weights up to 762.8 kg (1,682 lb).

(3) Determined by the PWR fuel criticality acceptance curve shown in Figure 1.1.

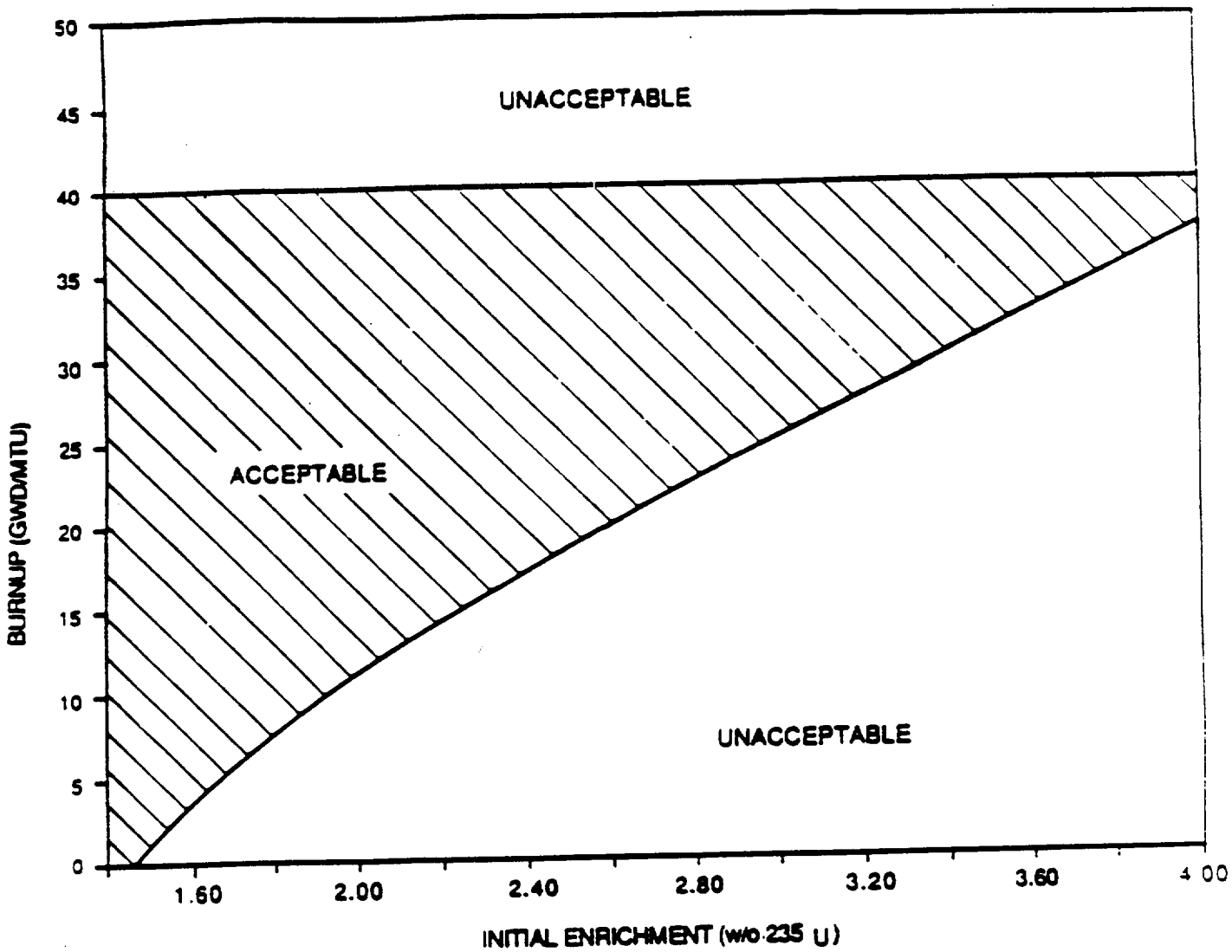

Figure 1.1

PWR Fuel Criticality Acceptance Curve

Table 1-1b BWR Fuel Specifications of Fuel to be Stored in the Standardized NUHOMS-52B DSC[1]

Title or Parameter	Specifications
Fuel	Only intact, unconsolidated BWR fuel assemblies with the following requirements
Physical Parameters	
Assembly Length	See SAR Chapter 3
Nominal Cross-Sectional Envelope	See SAR Chapter 3
Maximum Assembly Weight (w/fuel channels)	See SAR Chapter 3
No. of Assemblies per DSC	≤52 intact channeled assemblies
Fuel Cladding	Zircaloy-clad fuel with no known or suspected gross cladding breaches
Thermal Characteristics	
Decay Heat Power per Fuel Assembly	≤0.37 kW (this value is maximum for any given assembly, and may not be averaged for all 52 assemblies)
Radiological Characteristics	
Burnup	≤35,000 MWD/MTU
Post Irradiation Time	≥5 years
Maximum Initial Enrichment	≤4.0 wt. % U-235 (DSC with 0.75% borated neutron absorber plates)
Maximum Initial Uranium Content	≤198 kg/assembly
Neutron Source Per Assembly	≤1.01E8 n/sec with spectrum bounded by that in Chapter 7 of SAR
Gamma Source Per Assembly	≤2.63E15 photon/sec with spectrum bounded by that in Chapter 7 of SAR

(1) The limiting fuel specifications listed above must be met by every individual fuel assembly to be stored in the standardized NUHOMS-52B system. Any deviation constitutes an Unanalyzed Condition and Violation of the Certificate of Compliance.

1.2.2 DSC Vacuum Pressure During Drying

Limit/Specification:

Vacuum Pressure:	≤ 3 mm Hg
Time at Pressure:	≥ 30 minutes following stepped evacuation
Number of Pump-Downs:	2

Applicability: This is applicable to all DSCs.

Objective: To ensure a minimum water content.

Action: If the required vacuum pressure cannot be obtained:

1. Confirm that the vacuum drying system is properly installed.
2. Check and repair, or replace, the vacuum pump.
3. Check and repair the system as necessary.
4. Check and repair the seal weld between the inner top cover plate and the DSC shell.

Surveillance: No maintenance or tests are required during normal storage. Surveillance of the vacuum gauge is required during the vacuum drying operation.

Bases: A stable vacuum pressure of ≤ 3 mm Hg further ensures that all liquid water has evaporated in the DSC cavity, and that the resulting inventory of oxidizing gases in the DSC is well below the 0.25 volume%.

1.2.3 DSC Helium Backfill Pressure

Limit/Specifications:

Helium 2.5 psig ± 2.5 psig backfill pressure (stable for 30 minutes after filling).

Applicability: This specification is applicable to all DSCs.

Objective: To ensure that: (1) the atmosphere surrounding the irradiated fuel is a non-oxidizing inert gas; (2) the atmosphere is favorable for the transfer of decay heat.

Action: If the required pressure cannot be obtained:

1. Confirm that the vacuum drying system and helium source are properly installed.
2. Check and repair or replace the pressure gauge.
3. Check and repair or replace the vacuum drying system.
4. Check and repair or replace the helium source.
5. Check and repair the seal weld on DSC top shield plug.

If pressure exceeds the criterion, release a sufficient quantity of helium to lower the DSC cavity pressure.

Surveillance: No maintenance or tests are required during the normal storage. Surveillance of the pressure gauge is required during the helium backfilling operation.

Bases: The value of 2.5 psig was selected to ensure that the pressure within the DSC is within the design limits during any expected normal and off-normal operating conditions.

1.2.4 DSC Helium Leak Rate of Inner Seal Weld

Limit/Specification:

$\leq 1.0 \times 10^{-4}$ atm · cubic centimeters per second (atm · cm^3/s).

Applicability: This specification is applicable to the inner top cover plate seal weld of all DSCs.

Objective:

1. To limit the total radioactive gases normally released by each canister to negligible levels. Should fission gases escape the fuel cladding, they will remain confined by the DSC confinement boundary.

2. To retain helium cover gases within the DSC and prevent oxygen from entering the DSC. The helium improves the heat dissipation characteristics of the DSC and prevents any oxidation of fuel cladding.

Action: If the leak rate test of the inner seal weld exceeds 1.0×10^{-4} (atm · cm^3/s):

1. Check and repair the DSC drain and fill port fittings for leaks.

2. Check and repair the inner seal weld.

3. Check and repair the inner top cover plate for any surface indications resulting in leakage.

Surveillance: After the welding operation has been completed, perform a leak test with a helium leak detection device.

Bases: If the DSC leaked at the maximum acceptable rate of 1.0×10^{-4} atm · cm^3/s for a period of 20 years, only 63,100 cc of helium would escape from the DSC. This is only 1% of the 6.3×10^6 cm^3 of helium initially introduced in the DSC. This amount of leakage would have a negligible effect on the inert environment of the DSC cavity. (Reference: American National Standards Institute, ANSI N14.5-1987, "For Radioactive Materials—Leakage Tests on Packages for Shipment," Appendix B3).

1.2.5 DSC Dye Penetrant Test of Closure Welds

Limit/Specification:

All DSC closure welds except those subjected to full volumetric inspection shall be dye penetrant tested in accordance with the requirements of the ASME Boiler and Pressure Vessel Code Section III, Division 1, Article NB-5000 (Reference 8.3 of SAR). The liquid penetrant test acceptance standards shall be those described in Subsection NB-5350 of the Code.

Applicability: This is applicable to all DSCs. The welds include inner and outer top and bottom covers, and vent and syphon port covers.

Objective: To ensure that the DSC is adequately sealed in a redundant manner and leak tight.

Action: If the liquid penetrant test indicates that the weld is unacceptable:

1. The weld shall be repaired in accordance with approved ASME procedures.

2. The new weld shall be re-examined in accordance with this specification.

Surveillance: During DSC closure operations. No additional surveillance is required for this operation.

Bases: Article NB-5000 Examination, ASME Boiler and Pressure Vessel Code, Section III, Division 1, Sub-Section NB (Reference 8.3 of SAR).

1.2.6 DSC Top End Dose Rates

Limit/Specification:

Dose rates at the following locations shall be limited to levels which are less than or equal to:

a. 200 mrem/hr at top shield plug surface at centerline with water in cavity.

b. 400 mrem/hr at top cover plate surface at centerline without water in cavity.

Applicability: This specification is applicable to all DSCs.

Objective: The dose rate is limited to this value to ensure that the DSC has not been inadvertently loaded with fuel not meeting the specifications in Section 1.2.1 and to maintain dose rates as low as reasonably achievable during DSC closure operations.

Action:

a. If specified dose rates are exceeded, the following actions should be taken:

1. Confirm that the spent fuel assemblies placed in DSC conform to the fuel specifications of Section 1.2.1

2. Visually inspect placement of top shield plug. Re-install or adjust position of top shield plug if it is not properly seated.

3. Install additional temporary shielding.

b. Submit a letter report to the NRC within 30 days summarizing the action taken and the results of the surveillance, investigation and findings. The report must be submitted using instructions in 10 CFR 72.4 with a copy sent to the administrator of the appropriate NRC regional office.

Surveillance: Dose rates shall be measured before seal welding the inner top cover plate to the DSC shell and welding the outer top cover plate to the DSC shell.

Basis: The basis for this limit is the shielding analysis presented in Section 7.0 of the SAR.

1.2.7 HSM Dose Rates

Limit/Specification:

Dose rates at the following locations shall be limited to levels which are less than or equal to:

a. 400 mrem/hr at 3 feet from the HSM surface.

b. Outside of HSM door on center line of DSC 100 mrem/hr.

c. End shield wall exterior 20 mrem/hr.

Applicability: This specification is applicable to all HSMs which contain a loaded DSC.

Objective: The dose rate is limited to this value to ensure that the cask (DSC) has not been inadvertently loaded with fuel not meeting the specifications in Section 1.2.1 and to maintain dose rates as-low-as-is-reasonably achievable (ALARA) at locations on the HSMs where surveillance is performed, and to reduce off-site exposures during storage.

Action:

a. If specified dose rates are exceeded, the following actions should be taken:

   1. Ensure that the DSC is properly positioned on the support rails.

   2. Ensure proper installation of the HSM door.

   3. Ensure that the required module spacing is maintained.

   4. Confirm that the spent fuel assemblies contained in the DSC conform to the specifications of Section 1.2.1.

   5. Install temporary or permanent shielding to mitigate the dose to acceptable levels in accordance with 10 CFR Part 20, 10 CFR 72.104(a), and ALARA.

b. Submit a letter report to the NRC within 30 days summarizing the action taken and the results of the surveillance, investigation and findings. The report must be submitted using instructions in 10 CFR 72.4 with a copy sent to the administrator of the appropriate NRC regional office.

Surveillance: The HSM and ISFSI shall be checked to verify that this specification has been met after the DSC is placed into storage and the HSM door is closed.

Basis: The basis for this limit is the shielding analysis presented in Section 7.0 of the SAR. The specified dose rates provide as-low-as-is-reasonably-achievable on-site and off-site doses in accordance with 10 CFR Part 20 and 10 CFR 72.104(a).

1.2.8 HSM Maximum Air Exit Temperature

Limit/Specification:

Following initial DSC transfer to the HSM or the occurrence of accident conditions, the equilibrium air temperature difference between ambient temperature and the vent outlet temperature shall not exceed 100°F for ≥5 year cooled fuel, when fully loaded with 24 kW heat.

Applicability:

This specification is applicable to all HSMs stored in the ISFSI. If a DSC is placed in the HSM with a heat load less than 24 kW, the limiting difference between outlet and ambient temperatures shall be determined by a calculation performed by the user using the same methodology and inputs documents in the SAR and SER.

Objective:

The objective of this limit is to ensure that the temperatures of the fuel cladding and the HSM concrete do not exceed the temperatures calculated in Section 8 of the SAR. That section shows that if the air outlet temperature difference is less than or equal to 100°F (with a thermal heat load of 24 kW), the fuel cladding and concrete will be below the respective temperature limits for normal long-term operation.

Action:

If the temperature rise is greater than that specified, then the air inlets and exits should be checked for blockage. If the blockage is cleared and the temperature is still greater than that specified, the DSC and HSM cavity may be inspected using video equipment or other suitable means. If environmental factors can be ruled out as the cause of excessive temperatures, then the fuel bundles are producing heat at a rate higher than the upper limit specified in Section 3 of the SAR and will require additional measurements and analysis to assess the actual performance of the system. If excessive temperatures cause the system to perform in an unacceptable manner and/or the temperatures cannot be controlled to acceptable limits, then the cask shall be unloaded.

Surveillance:

The temperature rise shall be measured and recorded daily following DSC insertion until equilibrium temperature is reached, 24 hours after insertion, and again on a daily basis after insertion into the HSM or following the occurrence of accident conditions. If the temperature rise is within the specifications or the calculated value for a heat load less than 24 kW, then the HSM and DSC are performing as designed and no further temperature measurements are required. Air temperatures must be measured in such a manner as to obtain representative values of inlet and outlet air temperatures.

Basis:

The specified temperature rise is selected to ensure the fuel clad and concrete temperatures are maintained at or below acceptable long-term storage limits.

1.2.9 Transfer Cask Alignment with HSM

Limit/Specification:

The cask must be aligned with respect to the HSM so that the longitudinal centerline of the DSC in the transfer cask is within $\pm 1/8$ inch of its true position when the cask is docked with the HSM front access opening.

Applicability: This specification is applicable during the insertion and retrieval of all DSCs.

Objective: To ensure smooth transfer of the DSC from the transfer cask to HSM and back.

Action: If the alignment tolerance is exceeded, the following actions should be taken:

a. Confirm that the transfer system is properly configured.

b. Check and repair the optical survey equipment.

c. Confirm the locations of the alignment targets on the transfer cask and HSM.

Surveillance: Before initiating DSC insertion or retrieval, site the targets with the optical survey equipment to confirm alignment. Observe the transfer system during DSC insertion or retrieval to ensure that motion or excessive vibration does not occur.

Basis: The basis for the true position alignment tolerance is the clearance between the DSC shell, the transfer cask cavity, the HSM access opening, and the DSC support rails inside the HSM.

1.2.10 DSC Handling Height Outside the Spent Fuel Pool Building

Limit/Specification:

1. The loaded TC/DSC shall not be handled at a height greater than 80 inches outside the spent fuel pool building.

2. In the event of a drop of a loaded TC/DSC from a height greater than 15 inches: (a) fuel in the DSC shall be returned to the reactor spent fuel pool; (b) the DSC shall be removed from service and evaluated for further use; and (c) the TC shall be inspected for damage and evaluated for further use.

Applicability: The specification applies to handling the TC, loaded with the DSC, on route to, and at, the storage pad.

Objective:

1. To preclude a loaded TC/DSC drop from a height greater than 80 inches.

2. To maintain spent fuel integrity, according to the spent fuel specification for storage, continued confinement integrity, and DSC functional capability, after a tip-over or drop of a loaded DSC from a height greater than 15 inches.

Surveillance: In the event of a loaded TC/DSC drop accident, the system will be returned to the reactor fuel handling building, where, after the fuel has been returned to the spent fuel pool, the DSC and TC will be inspected and evaluated for future use.

Basis: The NRC evaluation of the TC/DSC drop analysis concurred that drops up to 80 inches, of the DSC inside the TC, can be sustained without breaching the confinement boundary, preventing removal of spent fuel assemblies, or causing a criticality accident. This specification ensures that handling height limits will not be exceeded in transit to, or at the storage pad. Acceptable damage may occur to the TC, DSC, and the fuel stored in the DSC, for drops of height greater than 15 inches. The specification requiring inspection of the DSC and fuel following a drop of 15 inches or greater ensures that the spent fuel will continue to meet the requirements for storage, the DSC will continue to provide confinement, and the TC will continue to provide its design functions of DSC transfer and shielding.

1.2.11 Transfer Cask Dose Rates

Limit/Specification:

Dose rates from the transfer cask shall be limited to levels which are less than or equal to:

a. 200 mrem/hr at 3 feet with water in the DSC cavity.

b. 500 mrem/hr at 3 feet without water in the DSC cavity.

Applicability: This specification is applicable to the transfer cask containing a loaded DSC.

Objective: The dose rate is limited to this value to ensure that the DSC has not been inadvertently loaded with fuel not meeting the specifications in Section 1.2.1 and to maintain dose rates as-low-as-is-reasonably achievable during DSC transfer operations.

Action: If specified dose rates are exceeded, place temporary shielding around affected areas of transfer cask and review the plant records of the fuel assemblies which have been placed in DSC to ensure they conform to the fuel specifications of Section 1.2.1. Submit a letter report to the NRC within 30 days summarizing the action taken and the results of the surveillance, investigation and findings. The report must be submitted using instructions in 10 CFR 72.4 with a copy sent to the administrator of the appropriate NRC regional office.

Surveillance: The dose rates should be measured as soon as possible after the transfer cask is removed from the spent fuel pool.

Basis: The basis for this limit is the shielding analysis presented in Section 7.0 of the SAR.

1.2.12 Maximum DSC Removable Surface Contamination

Limit/Specification:

2,200 dpm/100 cm^2 for beta-gamma sources
220 dpm/100 cm^2 for alpha sources.

Applicability: This specification is applicable to all DSCs.

Objective: To ensure that release of non-fixed contamination above accepted limits does not occur.

Action: If the required limits are not met:

a. Flush the DSC/transfer cask annulus with demineralized water and repeat surface contamination surveys of the DSC upper surface.

b. If contamination of the DSC cannot be reduced to an acceptable level by this means, direct surface cleaning techniques shall be used following removal of the fuel assemblies from the DSC and removal of the DSC from the transfer cask.

c. Check and replace the DSC/transfer cask annulus seal to ensure proper installation and repeat canister loading process.

Surveillance: Following placement of each loaded DSC/transfer cask into the cask decontamination area, fuel pool water above the top shield plug shall be removed and the top region of the DSC and cask shall be decontaminated. A contamination survey of the upper 1 foot of the DSC and cask shall be taken. In addition, contamination surveys shall be taken on the inside surfaces of the TC after the DSC has been transferred into the HSM. If the above surface contaimination limit is exceeded, the TC shall be decontaminated.

Basis: This non-fixed contamination level is consistent with the requirements of 10 CFR 71.87(i)(1) and 49 CFR 173.443, which regulate the use of spent fuel shipping containers. Consequently, these contamination levels are considered acceptable for exposure to the general environment. This level will also ensure that contamination levels of the inner surfaces of the HSM and potential releases of radioactive material to the environment are minimized.

1.2.13 TC/DSC Lifting Heights as a Function of Low Temperature and Location

Limit/Specification:

1. No lifts or handling of the TC/DSC at any height are permissible at DSC basket temperatures below -20°F inside the spent fuel pool building.

2. The maximum lift height of the TC/DSC shall be 80 inches if the basket temperature is below 0°F but higher than -20°F inside the spent fuel pool building.

3. No lift height restriction is imposed on the TC/DSC if the basket temperature is higher than 0°F inside the spent fuel pool building.

4. The maximum lift height and handling height for all transfer operations outside the spent fuel pool building shall be 80 inches <u>and</u> the basket temperature may not be lower than 0°F.

Applicability: These temperature and height limits apply to lifting and transfer of all loaded TC/DSCs inside and outside the spent fuel pool building. The requirements of 10 CFR Part 72 apply outside the spent fuel building. The requirements of 10 CFR Part 50 apply inside the spent fuel pool building.

Objective: The low temperature and height limits are imposed to ensure that brittle fracture of the ferritic steels, used in the TC trunnions and shell and in the DSC basket, does not occur during transfer operations.

Action: Confirm the basket temperature before transfer of the TC. If calculation or measurement of this value is available, then the ambient temperature may conservatively be used.

Surveillance: The ambient temperature shall be measured before transfer of the TC/DSC.

Bases: The basis for the low temperature and height limits is ANSI N14.6-1986 paragraph 4.2.6 which requires at least 40°F higher service temperature than nil ductility transition (NDT) temperature for the TC. In the case of the standardized TC, the test temperature is -40°F; therefore, although the NDT temperature is not determined, the material will have the required 40°F margin if the ambient temperature is 0°F or higher. This assumes the material service temperature is equal to the ambient temperature.

The basis for the low temperature limit for the DSC is NUREG/CR-1815. The basis for the handling height limits is the NRC evaluation of the structural integrity of the DSC to drop heights of 80 inches and less.

1.2.14 TC/DSC Transfer Operations at High Ambient Temperatures

Limit/Specification:

1. The ambient temperature for transfer operations of a loaded TC/DSC shall not be greater that 100°F (when cask is exposed to direct insolation).

2. For transfer operations when ambient temperatures exceed 100°F up to 125°F, a solar shield shall be used to provide protection against direct solar radiation.

Applicability: This ambient temperature limit applies to all transfer operations of loaded TC/DSCs outside the spent fuel pool building.

Objective: The high temperature limit (100°F) is imposed to ensure that:

1. The fuel cladding temperature limit is not exceeded,

2. The solid neutron shield material temperature limit is not exceeded, and

3. The corresponding TC cavity pressure limit is not exceeded.

Action: Confirm what the ambient temperature is and provide appropriate solar shade if ambient temperature is expected to exceed 100°F.

Surveillance: The ambient temperature shall be measured before transfer of the TC/DSC.

Bases: The basis for the high temperature limit is PNL-6189 (Reference 1) for the fuel clad limit, the manufacturer's specification for neutron shield, and the design basis pressure of the TC internal cavity pressure.

1.2.15 Boron Concentration in the DSC Cavity Water (24-P Design Only)

Limit/Specification:

The DSC cavity shall be filled only with water having a boron concentration equal to, or greater than 2,000 ppm.

Applicability: This limit applies only to the standardized NUHOMS-24P design. No boration in the cavity water is required for the standardized NUHOMS-52B system since that system uses fixed absorber plates.

Objective: To ensure a subcritical configuration is maintained in the case of accidental loading of the DSC with unirradiated fuel.

Action: If the boron concentration is below the required weight percentage concentration (gm boron/10^6 gm water), add boron and re-sample, and test the concentration until the boron concentration is shown to be greater than that required.

Surveillance: Written procedures shall be used to independently determine (two samples analyzed by different individuals) the boron concentration in the water used to fill the DSC cavity.

1. Within 4 hours before insertion of the first fuel assembly into the DSC, the dissolved boron concentration in water in the spent fuel pool, and in the water that will be introduced in the DSC cavity, shall be independently determined (two samples chemically analyzed by two individuals).

2. Within 4 hours before flooding the DSC cavity for unloading the fuel assemblies, the dissolved boron concentration in water in the spent pool, and in the water that will be introduced into the DSC cavity, shall be independently determined (two samples analyzed chemically by two individuals).

3. The dissolved boron concentration in the water shall be reconfirmed at intervals not to exceed 48 hours until such time as the DSC is removed from the spent fuel pool or the fuel has been removed from the DSC.

Bases: The required boron concentration is based on the criticality analysis for an accidental misloading of the DSC with unburned fuel, maximum enrichment, and optimum moderation conditions.

1.2.16 Provision of TC Seismic Restraint Inside the Spent Fuel Pool Building as a Function of Horizontal Acceleration and Loaded Cask Weight

Limit/Specification:

Seismic restraints shall be provided to prevent overturning of a loaded TC during a seismic event if a certificate holder determines that the horizontal acceleration is 0.40 g or greater and the fully loaded TC weight is less than 190 kips. The determination of horizontal acceleration acting at the center of gravity (CG) of the loaded TC must be based on a peak horizontal ground acceleration at the site, but shall not exceed 0.25 g.

Applicability: This condition applies to all TCs which are subject to horizontal accelerations of 0.40 g or greater.

Objective: To prevent overturning of a loaded TC inside the spent fuel pool building.

Action: Determine what the horizontal acceleration is for the TC and determine if the cask weight is less than 190 kips.

Surveillance: Determine need for TC restraint before any operations inside the spent fuel pool building.

Bases: Calculation of overturning and restoring moments.

1.3 Surveillance and Monitoring

The NRC staff is requiring the following surveillance frequency for the HSM.

1.3.1 Visual Inspection of HSM Air Inlets and Outlets (Front Wall and Roof Birdscreen)

Limit/Surveillance:

A visual surveillance of the exterior of the air inlets and outlets shall be conducted daily. In addition, a close-up inspection shall be performed to ensure that no materials accumulate between the modules to block the air flow.

Objective: To ensure that HSM air inlets and outlets are not blocked for more than 40 hours to prevent exceeding the allowable HSM concrete temperature or the fuel cladding temperature.

Applicability: This specification is applicable to all HSMs loaded with a DSC loaded with spent fuel.

Action: If the surveillance shows blockage of air vents (inlets or outlets), they shall be cleared. If the screen is damaged, it shall be replaced.

Basis: The concrete temperature could exceed 350°F in the accident circumstances of complete blockage of all vents if the period exceeds approximately 40 hours. Concrete temperatures over 350°F in accidents (without the presence of water or steam) can have uncertain impact on concrete strength and durability. A conservative analysis (adiabatic heat case) of complete blockage of all air inlets or outlets indicates that the concrete can reach the accident temperature limit of 350°F in a time period of approximately 40 hours.

1.3.2 HSM Thermal Performance

Surveillance: Verify a temperature measurement of the thermal performance, for each HSM, on a daily basis. The temperature measurement could be any parameter such as (1) a direct measurement of the HSM temperatures, (2) a direct measurement of the DSC temperatures, (3) a comparison of the inlet and outlet temperature difference to predicted temperature differences for each individual HSM, or (4) other means that would identify and allow for the correction of off-normal thermal conditions that could lead to exceeding the concrete and fuel clad temperature criteria. If air temperatures are measured, they must be measured in such a manner as to obtain representative values of inlet and outlet air temperatures. Also due to the proximity of adjacent HSM modules, care must be exercised to ensure that measured air temperatures reflect only the thermal performance of an individual module, and not the combined performance of adjacent modules.

Action: If the temperature measurement shows a significant unexplained difference, so as to indicate the approach of materials to the concrete or fuel clad temperature criteria, take appropriate action to determine the cause and return the canister to normal operation. If the measurement or other evidence suggests that the concrete accident temperature criteria (350°F) has been exceeded for more than 24 hours, the HSM must be removed from service unless the licensee can provide test results in accordance with ACI-349, appendix A.4.3, demonstrating that the structural strength of the HSM has an adequate margin of safety.

Basis: The temperature measurement should be of sufficient scope to provide the licensee with a positive means to identify conditions which threaten to approach temperature criteria for proper HSM operation and allow for the correction of off-normal thermal conditions that could lend to exceeding the concrete and fuel clad temperature criteria.

Table 1.3.1

Summary of Surveillance and Monitoring Requirements

Surveillance or Monitoring	Period	Reference Section
1. Fuel Specification	PL	1.2.1
2. DSC Vacuum Pressure During Drying	L	1.2.2
3. DSC Helium Backfill Pressure	L	1.2.3
4. DSC Helium Leak Rate of Inner Seal Weld	L	1.2.4
5. DSC Dye Penetrant Test of Closure Welds	L	1.2.5
6. DSC Top End Dose Rates	L	1.2.6
7. HSM Dose Rates	L	1.2.7
8. HSM Maximum Air Exit Temperature	24 hrs	1.2.8
9. TC Alignment with HSM	S	1.2.9
10. DSC Handling Height Outside Spent Fuel Pool Building	AN	1.2.10
11. Transfer Cask Dose Rates	L	1.2.11
12. Maximum DSC Surface Contamination	L	1.2.12
13. TC/DSC Lifting Heights as a Function of Low Temperature and Location	L	1.2.13

Legend

PL Prior to loading
L During loading and prior to movement to HSM pad
24 hrs Time following DSC insertion into HSM
S Prior to movement of DSC to or from HSM
AN As necessary
D Daily (24 hour frequency)

Table 1.3.1

Summary of Surveillance and Monitoring Requirements (Continued)

Surveillance or Monitoring	Period	Reference Section
14. TC/DSC Transfer Operations at High Ambient Temperatures	L	1.2.14
15. Boron Concentration in DSC Cavity Water (24-P Design Only)	PL	1.2.15
16. Provision of TC Seismic Restraint Inside the Spent Fuel Pool Building as a Function of Horizontal Acceleration and Loaded Cask Weight	PL	1.2.16
17. Visual Inspection of HSM Air Inlets and Outlets	D	1.3.1
18. HSM Thermal Performance	D	1.3.2

Legend

PL Prior to loading
L During loading and prior to movement to HSM pad
24 hrs Time following DSC insertion into HSM
S Prior to movement of DSC to or from HSM
AN As necessary
D Daily (24 hour frequency)

References

1. Levy, I.S., et al., "Recommended Temperature Limits for Dry Storage of Spent Light Water Reactor Zircaloy-Clad Fuel Rods in Inert Gas," Pacific Northwest Laboratory Report, PNL-6189, May 1987.

2. Johnson, A.B., Jr., and E.R. Gilbert, "Technical Basis for Storage of Zircaloy-Clad Spent Fuel in Inert Gases," PNL-4835, September 1983.

SAFETY EVALUATION REPORT OF VECTRA TECHNOLOGIES, INC. a.k.a. PACIFIC NUCLEAR FUEL SERVICES, INC. SAFETY ANALYSIS REPORT FOR THE STANDARDIZED NUHOMS HORIZONTAL MODULAR STORAGE SYSTEM FOR IRRADIATED NUCLEAR FUEL

U.S. NUCLEAR REGULATORY COMMISSION
OFFICE OF NUCLEAR MATERIAL SAFETY
AND SAFEGUARDS

December 1994

Attachment F
to Attachment 2
Meeting 266

TABLE OF CONTENTS

Section		Page
1.0	INTRODUCTION, GENERAL DESCRIPTION	1-1
1.1	Introduction	1-1
1.2	Context	1-1
1.3	General Discussion of Reference Materials and Role of Inspection	1-2
1.3.1	General Description of Standardized NUHOMS System	1-4
1.3.2	Horizontal Storage Module	1-4
1.3.3	Dry Shielded Canister	1-6
1.3.4	Transfer Cask	1-7
1.3.5	Fuel Transfer Equipment	1-8
2.0	PRINCIPAL DESIGN CRITERIA	2-1
2.1	Introduction	2-1
2.2	Fuel to be Stored	2-1
2.3	Quality Standards	2-1
2.4	Protection Against Environmental Conditions and Natural Phenomena	2-2
2.4.1	Normal Operating Conditions	2-3
2.4.2	Off-Normal Operating Conditions	2-4
2.4.3	Accident Conditions	2-4
2.4.4	Load Combinations	2-5
2.5	Protection Against Fire and Explosion	2-6
2.6	Confinement Barriers and Systems	2-7
2.7	Instrumentation and Control Systems	2-8
2.8	Nuclear Criticality Safety	2-10
2.9	Radiological Protection	2-11
2.10	Spent Fuel and Radioactive Waste Storage and Handling	2-12
2.11	Decommissioning/Decontamination	2-12
2.12	Criteria for Fuel Stability	2-13
2.13	Findings and Conclusions	2-13
3.0	STRUCTURAL EVALUATION	3-1
3.1	Horizontal Storage Module	3-6
3.1.1	Design Description of HSM	3-6
3.1.2	Design Evaluation	3-7
3.1.2.1	Normal and Off-Normal Operations	3-7
3.1.2.2	Accident Analysis	3-8
3.1.3	Discussion and Conclusions	3-10

TABLE OF CONTENTS (Continued)

Section		Page
3.2	Dry Shielded Canister	3-11
3.2.1	Design Description of Dry Shielded Canister and Internals	3-11
3.2.2	Design Evaluation for DSC	3-12
3.2.2.1	DSC Normal Operation Conditions	3-12
3.2.2.2	DSC Off-Normal Events	3-15
3.2.2.3	DSC Accident Conditions	3-16
3.2.2.4	DSC Fatigue Evaluation	3-23
3.2.2.5	DSC Corrision	3-23
3.2.3	Discussion and Conclusions for DSC	3-24
3.3	Transfer Cask	3-24
3.3.1	Design Description of Transfer Cask	3-24
3.3.2	Design Evaluation of the Transfer Cask	3-25
3.3.2.1	TC Normal Operating Conditions	3-25
3.3.2.2	TC Accident Conditions	3-28
3.3.2.3	TC Fatigue Evaluation	3-30
3.3.2.4	TC Trunnion Loads and Stresses	3-30
4.0	THERMAL EVALUATION	4-1
4.1	Review Procedure	4-2
4.1.1	Design Description	4-2
4.1.2	Acceptance Criteria	4-3
4.1.3	Review Method	4-3
4.1.4	Key Design Information and Assumptions	4-4
4.2	Horizontal Storage Module (HSM)	4-5
4.2.1	Design Evaluation	4-5
4.2.1.1	Normal Operation	4-5
4.2.1.2	Off-Normal Conditions	4-5
4.2.1.3	Accident Conditions	4-5
4.2.2	Discussion and Conclusions	4-6
4.3	DSC	4-6
4.3.1	Design Evaluation	4-6
4.3.1.1	Normal Operating Conditions	4-6
4.3.1.2	Off-Normal Conditions	4-7
4.3.1.3	Accident Conditions	4-7
4.3.2	Discussion and Conclusion	4-7
4.4	TC	4-8
4.4.1	Design Evaluation	4-8
4.4.1.1	Normal Operating Conditions	4-8
4.4.1.2	Off-Normal Operating Conditions	4-8

TABLE OF CONTENTS (Continued)

Section		Page
	4.4.1.3 Accident Conditions	4-9
	4.4.2 Discussion and Conclusions	4-9
5.0	CONFINEMENT BARRIERS AND SYSTEMS EVALUATION	5-1
	5.1 Description of Review	5-1
	5.2 Design Evaluation	5-1
	5.3 Conclusions	5-3
6.0	SHIELDING EVALUATION	6-1
	6.1 Design Description	6-1
	6.2 Design Evaluation (Source Specification and Analysis)	6-1
	6.3 Discussion and Conclusions	6-2
7.0	NUCLEAR CRITICALITY SAFETY EVALUATION	7-1
	7.1 Design Description	7-1
	7.1.1 Standardized NUHOMS-24P Design	7-1
	7.1.2 Standardized NUHOMS-52B Design	7-1
	7.2 Design Evaluation	7-1
	7.2.1 Standardized NUHOMS-24P Design	7-1
	7.2.2 Standardized NUHOMS-52B Design	7-2
	7.3 Conclusions	7-3
	7.3.1 Standardized NUHOMS-24P Design	7-3
	7.3.2 Standardized NUHOMS-52B Design	7-5
8.0	RADIOLOGICAL PROTECTION EVALUATION	8-1
	8.1 Design Description	8-1
	8.2 Design Evaluation	8-2
	8.2.1 On-Site Radiological Protection	8-2
	8.2.2 Off-Site Radiological Protection	8-4
	8.2.2.1 Normal Operations	8-4
	8.2.2.2 Off-Normal Operations	8-5
	8.3 Discussion and Conclusions	8-5
	8.3.1 On-Site Radiological Protection	8-5
	8.3.2 Off-Site Radiological Protection	8-6
9.0	DECOMMISSIONING/DECONTAMINATION EVALUATION	9-1
	9.1 Design Description	9-1
	9.2 Design Evaluation	9-1
	9.3 Conclusions	9-2

TABLE OF CONTENTS (Continued)

Section		Page
10.0	QUALITY ASSURANCE	10-1
11.0	OPERATIONS, MAINTENANCE, TESTING, AND RECORDS	11-1
11.1	Operations	11-1
11.2	Maintenance	11-1
11.3	Testing	11-2
11.4	Records	11-3
12.0	CONDITIONS FOR SYSTEM USE	12-1
12.1	General Requirements and Conditions	12-1
12.1.1	Regulatory Requirements for a General License	12-1
12.1.2	Operating Procedures	12-2
12.1.3	Quality Assurance	12-3
12.1.4	Heavy Loads Requirements	12-3
12.1.5	Training Module	12-3
12.1.6	Pre-Operational Testing and Training Exercise	12-4
12.1.7	Special Requirements for First System in Place	12-4
12.1.8	Surveillance Requirements Applicability	12-5
12.2	Technical Specifications, Functional and Operating Limits	12-5
12.2.1	Fuel Specification	12-5
12.2.2	DSC Vacuum Pressure During Drying	12-11
12.2.3	DSC Helium Backfill Pressure	12-12
12.2.4	DSC Helium Leak Rate of Inner Seal Weld	12-13
12.2.5	DSC Dye Penetrant Test of Closure Welds	12-14
12.2.6	DSC Top End Dose Rates	12-15
12.2.7	HSM Dose Rates	12-16
12.2.8	HSM Maximum Air Exit Temperature	12-17
12.2.9	Transfer Cask Alignment with HSM	12-18
12.2.10	DSC Handling Height Outside the Spent Fuel Pool Building	12-19
12.2.11	Transfer Cask Dose Rates	12-20
12.2.12	Maximum DSC Removable Surface Contamination	12-21
12.2.13	TC/DSC Lifting Heights as a Function of Low Temperature and Location	12-22
12.2.14	TC/DSC Transfer Operations at High Ambient Temperatures	12-24
12.2.15	Boron Concentration in the DSC Cavity Water (24-P Design Only)	12-25

TABLE OF CONTENTS (Continued)

Section		Page
	12.2.16 Provision of TC Seismic Restraint Inside the Spent Fuel Pool Building as a Function of Horizontal Acceleration and Loaded Cask Weight	12-26
12.3	Surveillance and Monitoring	12-27
	12.3.1 Visual Inspection of HSM Air Inlets and Outlets (Front Wall and Roof Birdscreen)	12-27
	12.3.2 HSM Thermal Performance	12-28
13.0	REFERENCES	13-1

LIST OF FIGURES

Figure		Page
1.1	NUHOMS® Horizontal Storage Module Arrangement	1-11
1.2	NUHOMS® Dry Shielded Canister Assembly Components	1-12
1.3	NUHOMS® On-Site Transfer Cask	1-13
1.4	Composite View of NUHOMS® Transfer Cask and DSC with Spent PWR Fuel	1-14
1.5	Composite View of NUHOMS® Transfer Cask and DSC with Spent BWR Fuel	1-15
1.6	NUHOMS® System Components, Structures, and Transfer Equipment Elevation View	1-16
12.1	PWR Fuel Criticality Acceptance Curve	12-9

LIST OF TABLES

Table		Page
2.1	Design Criteria Sources Cited in the SAR	2-15
2.2	Evaluation of Design Criteria for Normal Operating Conditions	2-19
2.3	Evaluation of Design Criteria for Off-Normal Operating Conditions	2-22
2.4	Evaluation of Design Criteria for Accident Conditions	2-24
2.5	Load Combinations Used for HSM Reinforced Concrete	2-28
2.6	Load Combinations Used for DSC Support Assembly	2-30

LIST OF TABLES (Continued)

Table		Page
3.1.2-1	HSM Load Combination Results	3-32
3.1.2-2	DSC Support Assembly Load Combination Results	3-33
3.2.2-1	DSC Stress Analysis Results for Normal Loads	3-35
3.2.2-2	DSC Stress Analysis Results for Off-Normal Loads	3-36
3.2.2-3	DSC Load Combinations for Normal and Off-Normal Operating Conditions	3-37
3.2.2-4	DSC Stress Analysis Results for Accident Conditions	3-38
3.2.2-5	DSC Load Combinations for Accident	3-39
3.2.2-6	DSC Drop and Internal Pressure Accident Loads	3-41
3.2.2-7	DSC Enveloping Load Combination Results for Accident Loads	3-42
3.3.2-1	Transfer Cask Stress Analysis Results for Normal Loads	3-43
3.3.2-2	Transfer Cask Load Combinations for Normal Operating Conditions	3-44
3.3.2-3	Transfer Cask Stress Analysis Results for Accident Loads	3-45
3.3.2-4	Transfer Cask Drop Accident Loads	3-46
3.3.2-5	Transfer Cask Results for Tornado Driven Missile Impact	3-47
3.3.2-6	Transfer Cask Load Combinations for Accident Conditions	3-48
3.3.2-7	Summary of Stress Analyses for Upper Lifting Trunnions and Lower Resting Trunnions, Weld Regions and Cask Shell	3-49
4.2	Summary of Component Temperatures as a Function of Ambient Temperatures	4-10
12-1a	PWR Fuel Specifications of Fuel to be Stored in the Standardized NUHOMS-24P DSC	12-8
12-1b	BWR Fuel Specifications of Fuel to be Stored in the Standardized NUHOMS-52B DSC	12-10
12.3.1	Summary of Surveillance and Monitoring Requirements	12-29

1.0 INTRODUCTION, GENERAL DESCRIPTION

1.1 Introduction

VECTRA Technologies, Inc. (VECTRA), formerly Pacific Nuclear Fuel Services, Inc. (PNFS) has submitted a Safety Analysis Report (SAR) and supplementary docketed material (Reference 1) to support issuance of a Certificate of Compliance under 10 CFR Part 72, Subpart L (Reference 2). The application does not request NRC approval for installation at any specific site.

The subject of the SAR is the "standardized NUHOMS horizontal modular cask" storage system. For the purposes of this review, the system will be referred to as the "standardized NUHOMS system" to distinguish it from two previous versions of horizontal storage systems designed by NUTECH Engineers. The standardized NUHOMS system is different in many ways from the previous designs. Consequently the NRC staff reviewed all features of the standardized NUHOMS.

10 CFR 72.238 provides that a Certificate of Compliance for a cask model will be issued by NRC on a finding of compliance with 10 CFR 72.236(a) through (i). In addition, 10 CFR 72.234(a) through (f) contain conditions of approval of the spent fuel cask design, including requirements for compliance with 10 CFR 72.236, quality assurance requirements according to Subpart G of 10 CFR Part 72, and other administrative requirements for which the vendor is responsible.

The review focused on the specific requirements for spent fuel storage casks contained in 10 CFR 72.236(a) through (m). These requirements cover fuel specifications, design criteria and administrative aspects. As noted, issuing of the Certificate of Compliance will be based on an NRC finding that the requirements in 10 CFR 72.236(a) through (i) are met. Additionally, the staff will address whether the requirement of 10 CFR 72.236(m) has been considered. Issuance of the certificate is also subject to compliance with conditions specified in 10 CFR 72.236(j) through (l) for which the vendor is responsible.

The objectives of this Safety Evaluation Report (SER) are to document the NRC staff's review and evaluation of the Safety Analysis Report (SAR) (Reference 1), and to clearly state the compliance (or noncompliance) of the license application to the applicable requirements of 10 CFR Part 72, Subpart L.

1.2 Context

This SER provides NRC staff analyses and conditions on the SAR submitted by PNFS in conjunction with an application for certification of the standardized NUHOMS system described in the SAR.

The SAR was submitted in accordance with the requirements of 10 CFR Part 72, Subpart L. This SER is based on review for compliance with 10 CFR Part 72. Changes, clarifications, and additional information submitted to the NRC subsequent to the SAR during the review process (as listed at Reference 1) are considered to have the full effect and to express the same type of commitments as if they were included in the SAR itself.

The SAR presumes that the standardized NUHOMS system will be used on the site of a nuclear power reactor licensed by the NRC under 10 CFR Part 50, and that fuel loading and unloading will occur within a fuel pool of the licensed facility. The SER does not include identification of additional requirements should fuel loading and unloading not be within the fuel pool of a facility licensed under 10 CFR Part 50.

Information incorporated by reference or included by subsequent submittal (Reference 1) is considered as if it were information set out in the SAR itself. Where such information is already the subject of NRC staff approval, as by approval of a SER (e.g., References 3 and 4), that approval is considered to extend to the document incorporating the information by reference, to the extent of such incorporation, and subject to any qualifiers included in the referenced document and/or the corresponding SER.

Use of the proposed standardized NUHOMS system will include operations and use of equipment related to safety within a fuel pool of the facilities licensed under 10 CFR Part 50. Fuel handling operations for an ISFSI may require amendments to existing license technical specifications for the facility licensed under 10 CFR Part 50. This SER does not constitute the formal safety evaluation review for the safety of operations and equipment within fuel pool facilities. This SER does, however, examine the suitability of the transfer cask and DSC for mutual compatibility and for satisfaction of 10 CFR Part 72, Subpart L requirements.

The proposed standardized NUHOMS system uses designs for its components which have evolved from designs in use or under construction as ISFSIs at existing facilities. The approval of these ISFSIs have involved NRC SERs for topical reports and license application SARs prepared in compliance with 10 CFR Part 72 and Regulatory Guide 3.48 (Reference 5). These documents have provided a context to the review which assisted in determining suitable criteria and design acceptability.

1.3 General Discussion of Reference Materials and Role of Inspection

This SER refers in several places to fabrication specifications and engineering drawings for major components of the standardized NUHOMS system. The following paragraphs provide a general explanation for these references; they indicate the referenced specifications and drawings were not a basis for the staff's safety approval of a particular design topic in the SER. Rather, the staff reviewed aspects of the specifications and drawings to verify they accurately incorporated information that was part of the staff's basis for approving the cask design.

In basic terms, the cask vendor's design commitment, contained in codes, standards, and design criteria, is identified in the SER and serves as a design input for the vendor's design calculations. The vendor's calculations both demonstrate compliance with design inputs and produce design details, e.g., reinforcing steel sizing, shield lid thickness, and many other results called design outputs. Much of the design output is contained in the vendor's engineering drawings and fabrication specifications. These drawings and fabrication specifications provide the vendor's constructor and component fabricator with detailed instructions for constructing the standardized NUHOMS system and its components. These drawings and specifications are not approved by the NRC as a part of the staff's review of the vendor's standardized NUHOMS system.

As reflected in the SER, from the vendor's entire set of design information, the staff's design approval mainly relies on the vendor's criteria and design commitments and certain calculations or parts of calculations. The staff generally uses these portions of the vendor's design information to conduct an independent review and analysis to determine whether there is reasonable assurance that the vendor's design will perform its intended safety function.

Another aspect of the staff's activities reflected in the SER, separate from and related to its safety review, is the delineation of the requirements for NRC inspections. For instance, the staff may prepare inspection procedures for the regional or headquarters vendor inspection staffs to conduct certain types of inspections of spent fuel storage cask vendors, fabricators, and constructors. These inspection procedures may specify, in addition to the information in the procedures and the design commitments contained in the SER, that inspectors should use information in the vendor's fabrication specifications, engineering drawings, procurement documents, and material certifications to perform their field inspections.

Where the inspection procedures refer to the vendor's drawings and specifications, the staff has typically reviewed selected aspects of the vendor's drawings and fabrication specifications to verify that the results contained in the vendor's design calculations have been accurately transposed into the drawings and specifications. By so doing, the staff provides added assurance that the inspectors will have accurate documentation to inspect the adequacy of construction. It is important to note that this NRC inspection does not constitute an additional NRC review of the standardized NUHOMS system design or a further NRC safety determination of the adequacy of the standardized NUHOMS system design. Rather, inspection activities address the adequacy of component construction, fabrication, and quality assurance (QA). Therefore, as previously noted, while the staff did not rely upon the fabrication specifications or drawings in approving the design, the SER will reflect the staff's check of portions of these documents to verify they contain accurate design output information to be used by the fabricator and checked by NRC inspectors.

A further NRC check on the validity of the design output information is through QA requirements that review, approve, and link the individual QA programs of utility, vendor, fabricator, and constructor. Among other things, these QA programs ensure the control of changes to drawings and specifications for accuracy and ensure proper engineering review.

10 CFR 72.234(a) through (f) which contain the conditions of approval for spent fuel cask design, require compliance with the specific design criteria of 72.236 and the quality assurance requirements in subpart G and identify other administrative requirements for which the system vendor is responsible.

10 CFR 72.236(a) through (m) contain the specific requirements for spent fuel storage cask approval, including spent fuel specification, design criteria, and administrative requirements. As noted, the Certificate of Compliance is issued by the NRC on a finding that the requirements of 72.236(a) through (i) are met, and after the staff determines that the requirement of 72.236(m) has been considered. The issuance is also subject to the conditions specified in 72.236(j), (k), and (l) for which the vendor is responsible.

1.3.1 General Description of Standardized NUHOMS System

The following descriptions of the standardized NUHOMS system are based on the more complete descriptions provided by reference 1 and are only included here for the convenience of readers of the SER. The SER is based on the descriptions provided in the SAR. The standardized NUHOMS system components for irradiated fuel assemblies (IFA) storage at an ISFSI are the Dry Storage Canister (DSC) and the Horizontal Storage Module (HSM). Additional systems required for the DSC closure and transfer include the transfer cask (TC), the skid and skid positioning system, the trailer, the hydraulic ram system, and the DSC vacuum drying system.

1.3.2 Horizontal Storage Module

The standardized NUHOMS system uses HSMs assembled from standardized units, as illustrated in Figure 1.1. These are:

- Base Unit Assembly, consists of the monolithically poured reinforced concrete (RC) base unit of floor and four walls, with DSC access opening, inlet and outlet ventilation openings, and embedments for attachment of restraints, the DSC support structure roof slab, heat shields, spacers and shield walls. The base unit side walls are 0.46 m (1'-6"), the front wall is 0.76 m (2'-6"), and the rear wall and floor are 0.30 m (1') thick.

- DSC Support Structure, a structural steel frame with rails installed within the base unit to provide for sliding the DSC in and out of the HSM, supports the DSC within the HSM, and resists and transfers forces associated with a jammed DSC or a design basis earthquake.

- Roof Slab Assembly, a rectangular 0.91 m (3 foot) thick RC slab which is bolted to the base unit to complete the shielded enclosure for DSC storage. It includes embedments for attachment to the base unit for positioning, for lifting, and for

attachment of screens between adjacent modules and between modules and external separate shield walls.

- Second Shield Wall, a rectangular 0.61 m (2 foot) thick RC slab installed vertically at the outer side of HSM at the ends of rows of HSMs. The end shield walls are installed with channel spacers, shielded bolt assemblies attaching them to the HSM, and screens across the gaps between the walls.

- Single Module Rear Shield Wall, used when HSMs are placed in single rows (the alternative placement is with two rows back-to-back). The rear shield wall is a rectangular 0.46 m (1'-6") thick RC slab installed vertically against a base unit rear wall without an intervening space. The rear shield walls are installed with shielded bolt assemblies.

- Shielded Door, composed of a 5.1 cm (2") thick steel plate and 14.9 cm (5-7/8") of RC, which closes the DSC access opening and provides radiation shielding and resistance to natural phenomena.

- Basemat, cast-in-place RC foundation on which the HSMs rest. The HSMs are not connected to the basemat and are held in place against any horizontal forces by friction. Thickness of the basemat is to be determined by site foundation analysis.

- Approach Slabs, a cast-in-place RC slab providing for access and support of the DSC transport and transfer systems. This slab is structurally connected to the Basemat. Thickness of the approach slab is to be determined by site foundation analysis.

The HSM protects the DSC from the potentially adverse effects of natural phenomena, such as earthquake, tornado, tornado missiles, flood, and temperature.

The modular HSM system is considered acceptable for layout variations from a single HSM to unrestricted numbers of HSMs in single or back-to-back rows, without additional shielding, as approved in this SER, if criteria of the SAR are also met.

The HSM dissipates decay heat from the spent fuel by a combination of radiation, conduction, and convection. Natural convection air flow enters at the bottom of the HSM, circulates around the DSC, and exits through the flow channels between the HSM roof slab and side walls. A thermal radiation shield is used to reduce the HSM concrete temperatures to within acceptable limits for all conditions.

1.3.3 Dry Shielded Canister

The DSC is illustrated in Figure 1.2. A DSC is shown in storage position in Figure 1.1. The principal component subassemblies of the DSC are the shell with integral bottom cover plate and shield plug and ram/grapple ring, top shield plug, top cover plate, and basket assembly. The main component of construction of the DSC is a type 304 stainless steel cylindrical confinement vessel.

The internal basket assembly for the PWR fuel is comprised of 24 guide sleeves supported by 8 spacer discs at intervals corresponding to the fuel assembly spacer grids. Support rods maintain the spacer disks in location. The internal basket assembly for the channelized BWR fuel is similar to the PWR except that 52 guide sleeves are used for the BWR application, supported by 9 spacer discs. Borated stainless steel poison plates are used for all BWR baskets. Steel shielding is used in both the top and bottom end shield plugs.

Criticality safety during wet loading operations for the PWR fuel is maintained through the geometric separation of the fuel assemblies within the internal basket assembly, the inherent neutron absorption capability of the steel guide sleeves, the proper selection of sufficiently depleted fuel assemblies, and adequate boron concentration in the pool water. For BWR fuel assemblies, criticality safety during wet loading operations is maintained by similar means except that borated stainless steel plates are used in the guide sleeve assemblies and borated water is not required. Credit for burnup is not currently permitted by the NRC staff.

The DSC provides mechanical confinement for the stored fuel assemblies and all radioactive materials for two purposes: to prevent the dispersion of particulate or gaseous radionuclides from the fuel, and to maintain a barrier of helium around the fuel in order to mitigate corrosion of the fuel cladding and prevent further oxidation of the fuel.

The DSC provides radiological shielding in both axial directions. The top shield plug serves to protect operating personnel during the DSC drying and sealing operations. The bottom shielding reduces the HSM door area dose rates during storage. The DSC shielding is designed for a maximum contact dose of 2 mSv/hr (200 mrem/hr) before draining the DSC cavity.

The DSC is designed to slide from the transfer cask into the HSM and back without undue galling, scratching, gouging, or other damage to the sliding surfaces. This is accomplished by a combination of surface finishes and dry film lubricant coatings applied to the DSC and the DSC support assembly in the HSM. The transfer operation is illustrated in Figure 1.6.

1.3.4 Transfer Cask

The principal components of the transfer cask (TC) are shown in Figure 1.3 (SAR Figure 1.3-2b). Figures 1.4 and 1.5 (SAR Figures 4.2-9 and 4.2-9a) show the TC with DSC. Figure 1.6 (SAR Figure 1.1-2) shows the TC in position for DSC transfer to the HSM.

The transfer cask is a cylindrical vessel with a bottom end closure assembly and a bolted top cover plate. The cask's cylindrical walls are formed from three concentric steel shells with lead poured between the inner liner and the structural shell to provide gamma shielding during DSC transfer operations. The structural and outer shells form an annular pressure vessel. A solid neutron absorbing material is cast between the structural shell and outer shell to provide neutron shielding when the DSC is in the TC.

The cask bottom end assembly is welded to the cylindrical shell assembly. It includes two closure assemblies for the ram/grapple access penetration. A watertight bolted top cover plate, with a core of solid neutron absorbing material, is used for transfer operation within the Auxiliary Building (or Spent Fuel Storage Building in some plants). The bolted ram access penetration bottom cover plate assembly is replaced, after the TC is horizontal on the transport trailer and while still in the Auxiliary Building, by a two-piece neutron shield plug assembly for transfer operations from/to the Auxiliary Building to/from the HSM. The inner plug of this assembly is bolted to the TC. The outer plug is held in brackets by gravity. At the HSM site, the outer plug of the assembly is removed to provide access for the ram/grapple to push/pull the DSC into/from the HSM.

The top plate cover is bolted to the top flange of the cask during transport from/to the Auxiliary Building to/from the ISFSI. The top cover plate assembly consists of a thick structural plate with a thin shell encapsulating solid neutron shielding material. Two upper lifting trunnions are located near the top of the cask for downending/uprighting and lifting of the cask in the Auxiliary Building. Two lower trunnions, located near the base of the cask, serve as the axis of rotation during downending/uprighting operations and as supports during transport to/from the ISFSI. The TC is not designed as a pressure vessel.

The neutron shield material is BISCO Products NS-3. NS-3 is a shop castable, fire resistant material with a high hydrogen content which is designed for nuclear applications. The material is used in the cask outer annulus, top and bottom covers, and temporary shield plug. It produces water vapor and a small quantity of non-condensible gases when heated above 100°C (212°F). The off-gassing produces an internal pressure which increases with temperature. As the temperature is reduced, the off-gas products are reabsorbed into the matrix, and the pressure returns to atmospheric. The annular neutron shield containment is designed for an internal pressure of 655 kPag (95 psig). Pre-set safety relief valves are included to protect the neutron shield cover in the event that its design pressure is exceeded.

1.3.5 Fuel Transfer Equipment

With the exception of the TC, fuel transfer and auxiliary equipment necessary for ISFSI operations are not included as a part of the standardized NUHOMS system to be reviewed for a Certificate of Compliance under 10 CFR 72, Subpart L. However this equipment will be described for general information only. Fuel is transferred in ISFSI operations by means of the TC. Inside the fuel pool facility, the TC with loaded DSC is transferred from the fuel pool to a position where decontamination, drying, sealing, and installation of the TC cover take place. The TC and DSC are then transferred to the transfer trailer, still within the Auxiliary Building. The TC with DSC is moved to position for coupling with the HSM access opening by the transfer trailer, with final positioning by movement of the TC support shield over the trailer. The DSC is transferred from the TC to the HSM by use of the ram acting through the ram access opening of the TC.

Equipment used to physically grip, lift, inspect, and position the IFAs in the fuel pool is the same as that already in place and in use for Auxiliary Building IFA handling.

There is special equipment involved with fuel transfer within the Auxiliary Building unique to the ISFSI application. Of this, only the TC lifting yoke is used exclusively within the Auxiliary Building and is thereby subject to evaluation as part of the 10 CFR Part 50 license review of updates to the FSAR.

The lifting yoke is a special lifting device which provides the means for performing all cask handling operations within the plant's Auxiliary Building. It is designed to support a loaded transfer cask weight up to 90.7 t (100 tons). A lifting pin connects the Auxiliary Building cask handling crane hook and the lifting yoke. The lifting yoke is a passive, open hook design with two parallel lifting beams fabricated from thick, high-strength carbon steel plate material with a decontaminable coating. It is designed to be compatible with the Auxiliary Building crane hook and load block. The lifting yoke engages the outer shoulder of the transfer cask lifting trunnions. To facilitate shipment and maintenance, all yoke subcomponent structural connections are bolted.

Lifting slings are used in the Auxiliary Building for placement and removal of the DSC and TC shield plugs and covers. Eyebolts are installed on the items to be lifted to facilitate rigging for lifting.

The transfer trailer is used to transport the transfer cask skid and the loaded transfer cask from the Auxiliary Building to the ISFSI. The transfer trailer is an industrial heavy-haul trailer with pneumatic tires, hydraulic suspension and steering, and brakes on all wheels. Four hydraulic jacks are incorporated into the transfer trailer design to provide vertical elevation adjustment for alignment of the cask at the HSM. The transfer trailer is shown in Figure 1.6. It is pulled by a conventional tractor.

The trailer is pulled using a drawbar steering unit. The steering unit includes hydraulic master cylinders to provide motive force for the slave steering cylinders in the trailer. The trailer may also be steered manually using a remote steering control located on a pendant. This feature allows precise control as the trailer is backed up to the HSM. The pendant allows the operator the freedom to observe the trailer from the side and also reduces the operational exposure by increasing operator distance from the DSC and reducing operator time.

The trailer incorporates a skid positioning system which holds the TC support skid. The functions of the skid positioning systems (SPS) are to hold the TC support skid stationary (with respect to the transport trailer) during cask loading and transport, and to provide alignment between the transfer cask and the HSM before insertion or withdrawal of the DSC. It is composed of tie down or travel lock brackets, bolts, three hydraulically powered horizontal positioning modules, four hydraulic lifting jacks, and a remotely located hydraulic supply and control skid.

The hydraulic jacks are designed to support the cask setdown load and the loads applied to them during the HSM loading and unloading. Their purpose is to provide a solid support for the trailer frame and skid. Three measures are taken to avoid accidental lowering of the trailer payload: the hydraulic pump will be de-energized after the skid has been aligned (the jacks are also hydraulically locked out during operation of the horizontal cylinders); there are mechanical locking collars on the cylinders; and pilot-operated check valves are located on each jack assembly to prevent fluid loss in the event of a broken hydraulic line.

Three positioning modules provide the motive force to horizontally align the skid and cask with the HSM before insertion or retrieval of the DSC. The positioning module controls are manually operated and hydraulically powered. The system is designed to provide the capability to align the cask to within the specified alignment tolerance.

The hydraulic power supply and controls for the SPS are located on a skid which is normally stored on the hydraulic ram utility trailer. Directional metering valves are used to allow precise control of cylinder motions. The SPS is manually operated and has three operational modes: simultaneous actuation of the four vertical jacks or any pair of jacks, actuation of any single vertical jack, or actuation of any one of the three horizontal actuators. Simultaneous operation of the vertical jacks and the horizontal actuators is not possible. Fourteen small hydraulic quick-connect lines provide power to the seven SPS hydraulic cylinders.

The hydraulic ram system provides the motive force for transferring the DSC between the TC and the HSM. The hydraulic ram consists of a double-acting hydraulic cylinder with a capacity of 36,290 kg (80,000 lb.) in either push or pull mode and stroke of 6.4 m (21 feet). The ram will be supported during operation by a frame assembly attached to the bottom of the transfer cask and a tripod assembly resting on the concrete slab. The operational loads of the hydraulic ram are grounded through the transfer cask. The hydraulic ram system

includes a grapple at the end of the piston which is used to engage a grapple ring on the DSC for retrieval operations. Figure 1.6 shows main components of the hydraulic ram system (SAR Figure 1.1-2).

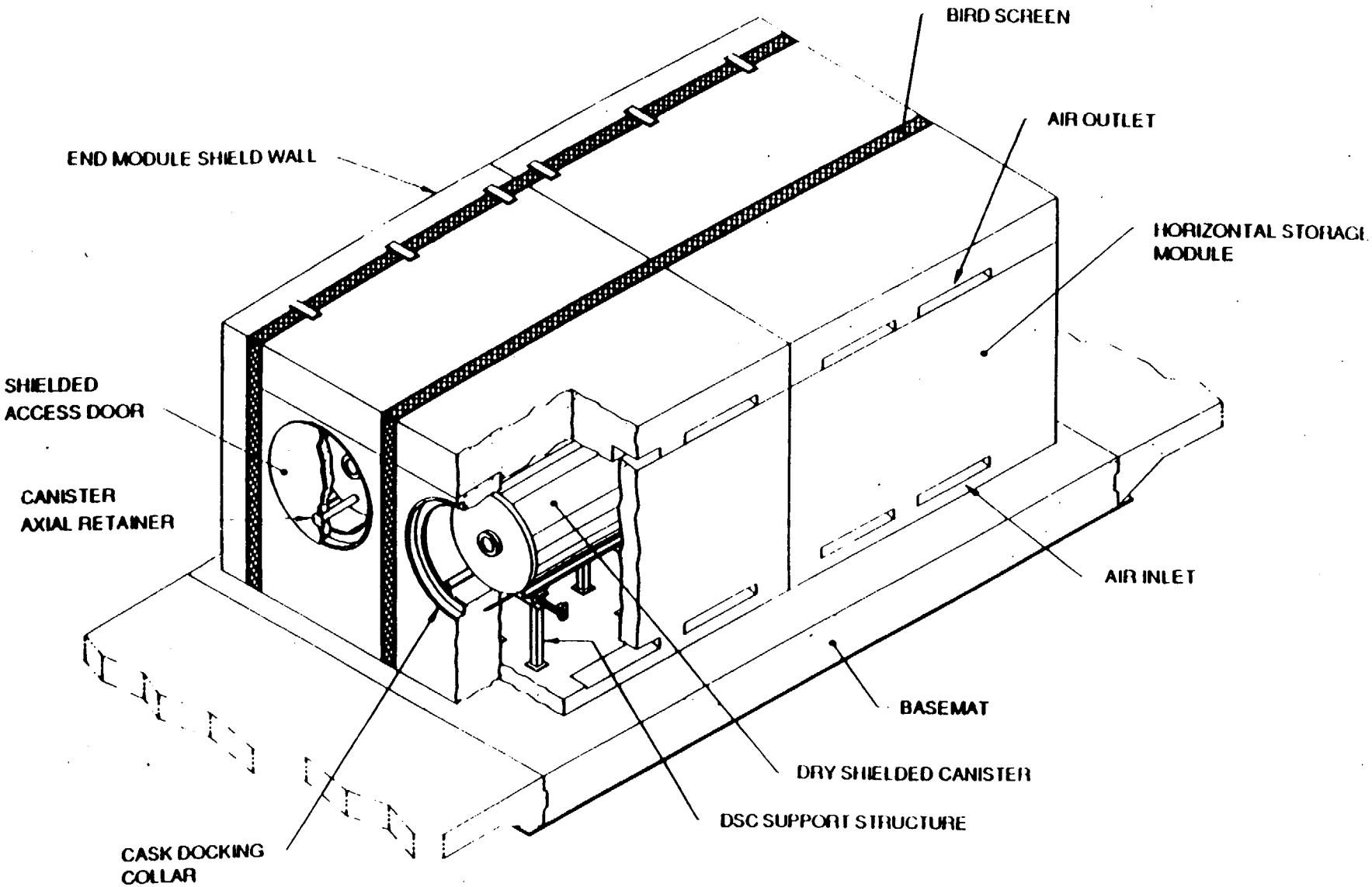

Figure 1.1

NUHOMS® Horizontal Storage Module Arrangement

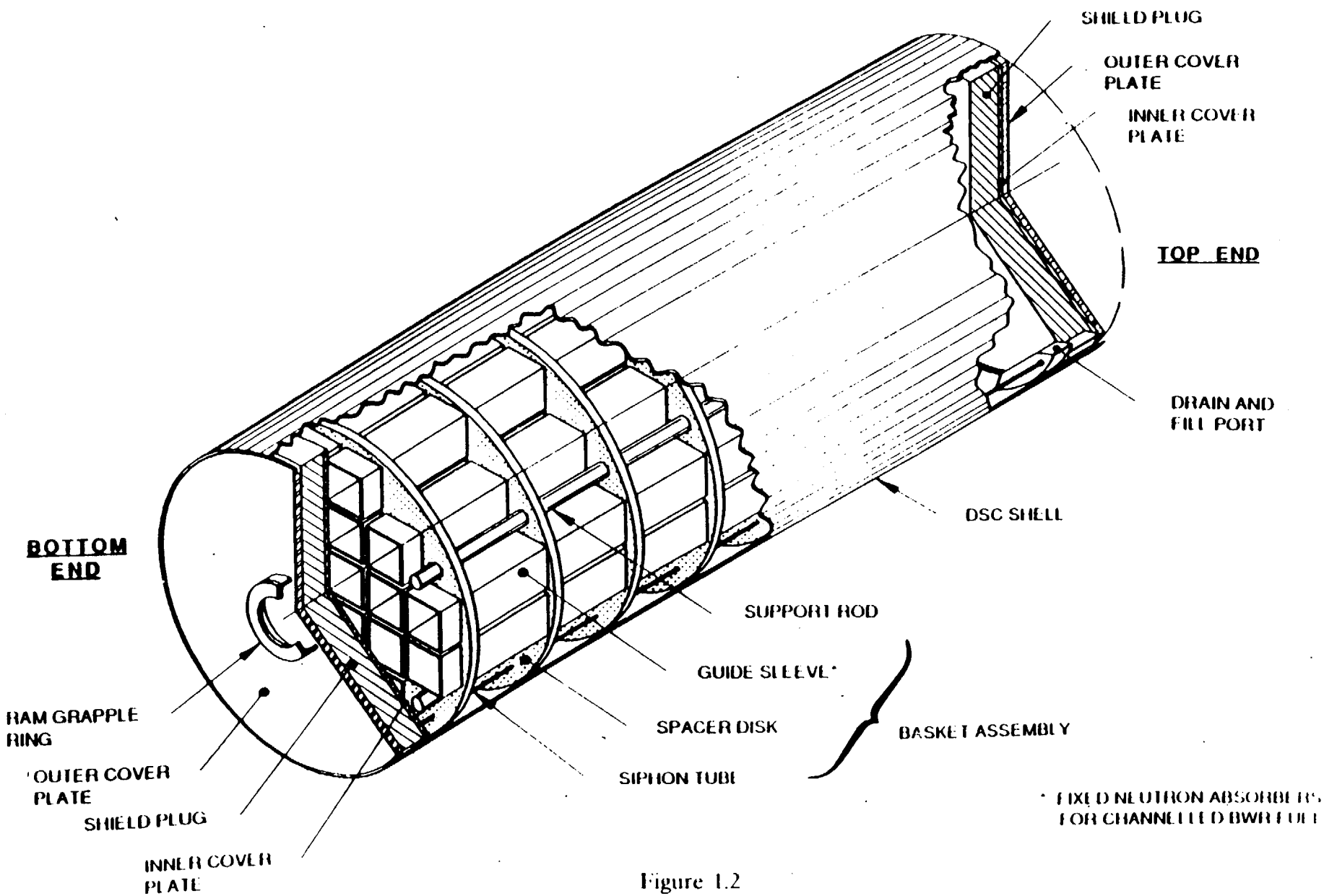

Figure 1.2

NUHOMS® Dry Shielded Canister Assembly Components

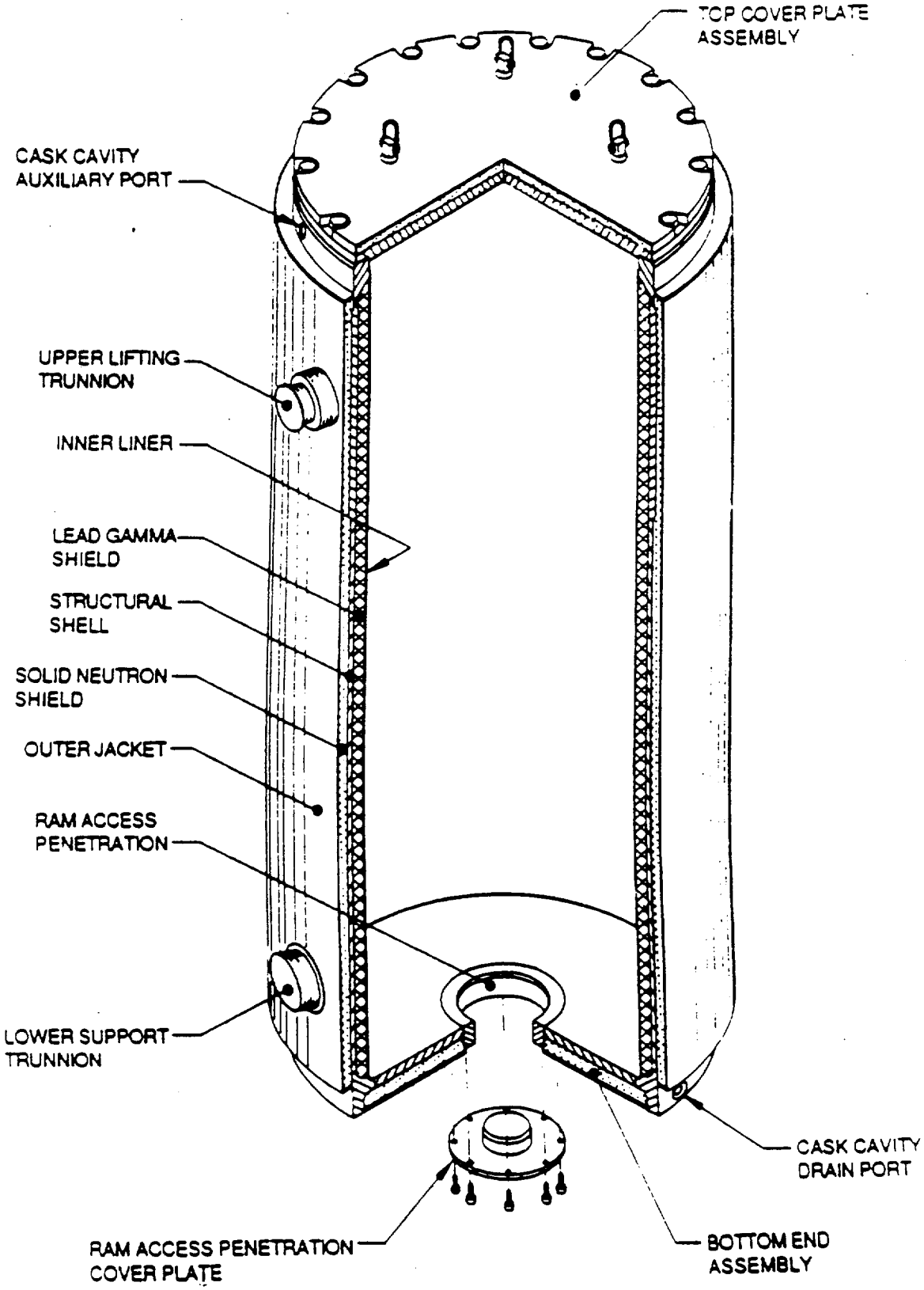

Figure 1.3

NUHOMS® On-Site Transfer Cask

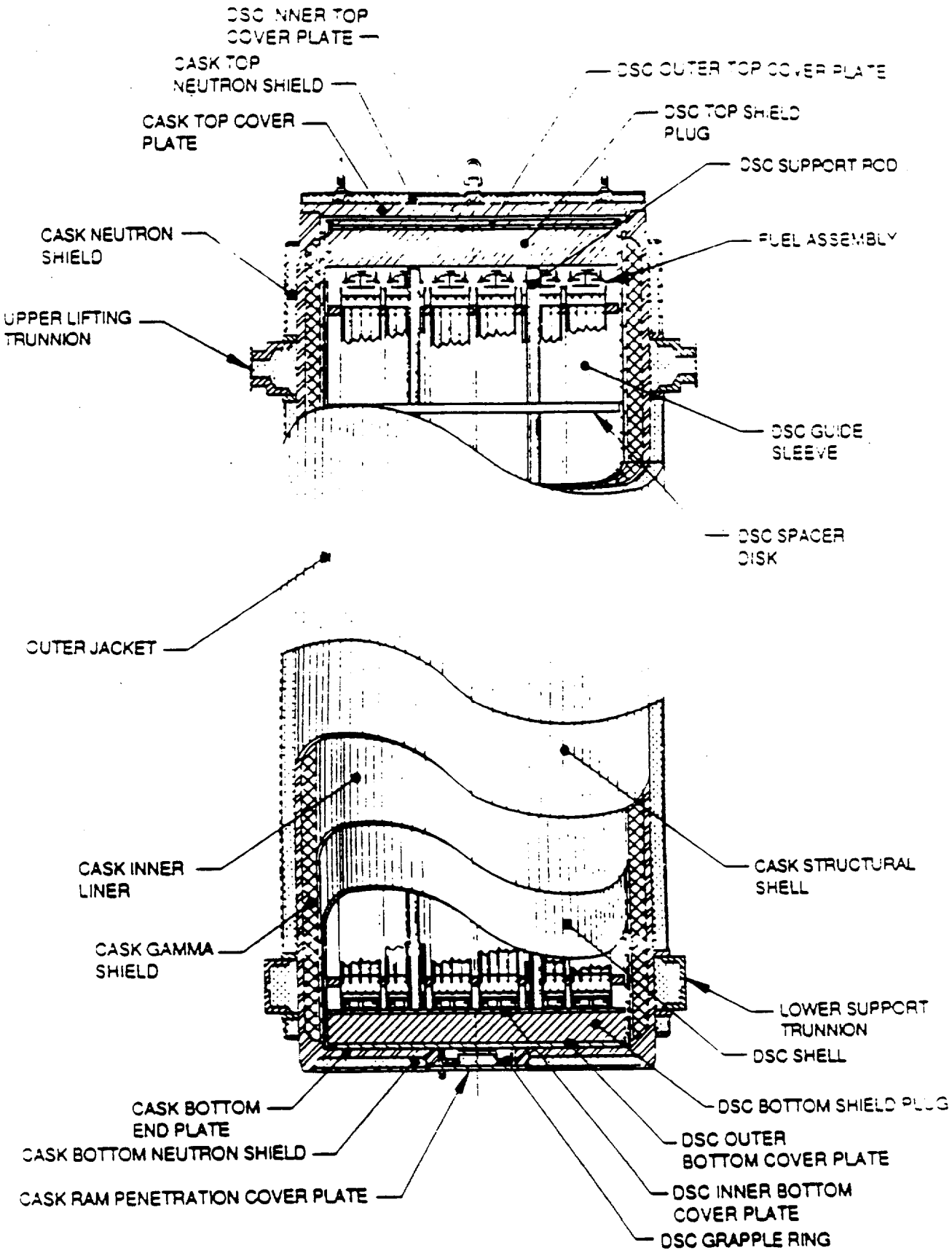

Figure 1.4

Composite View of NUHOMS® Transfer Cask and DSC with Spent PWR Fuel

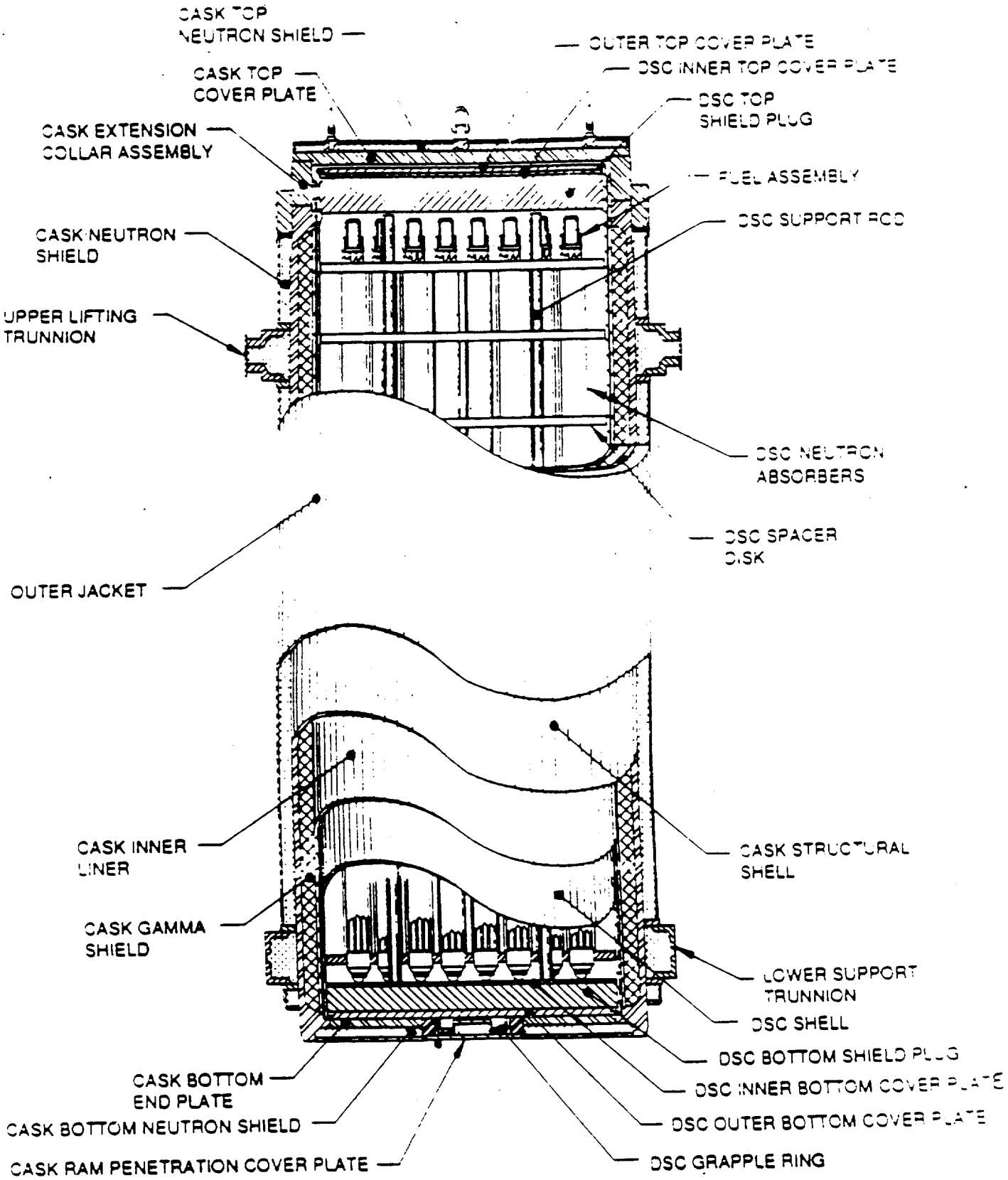

Figure 1.5

Composite View of NUHOMS® Transfer Cask and DSC with Spent BWR Fuel

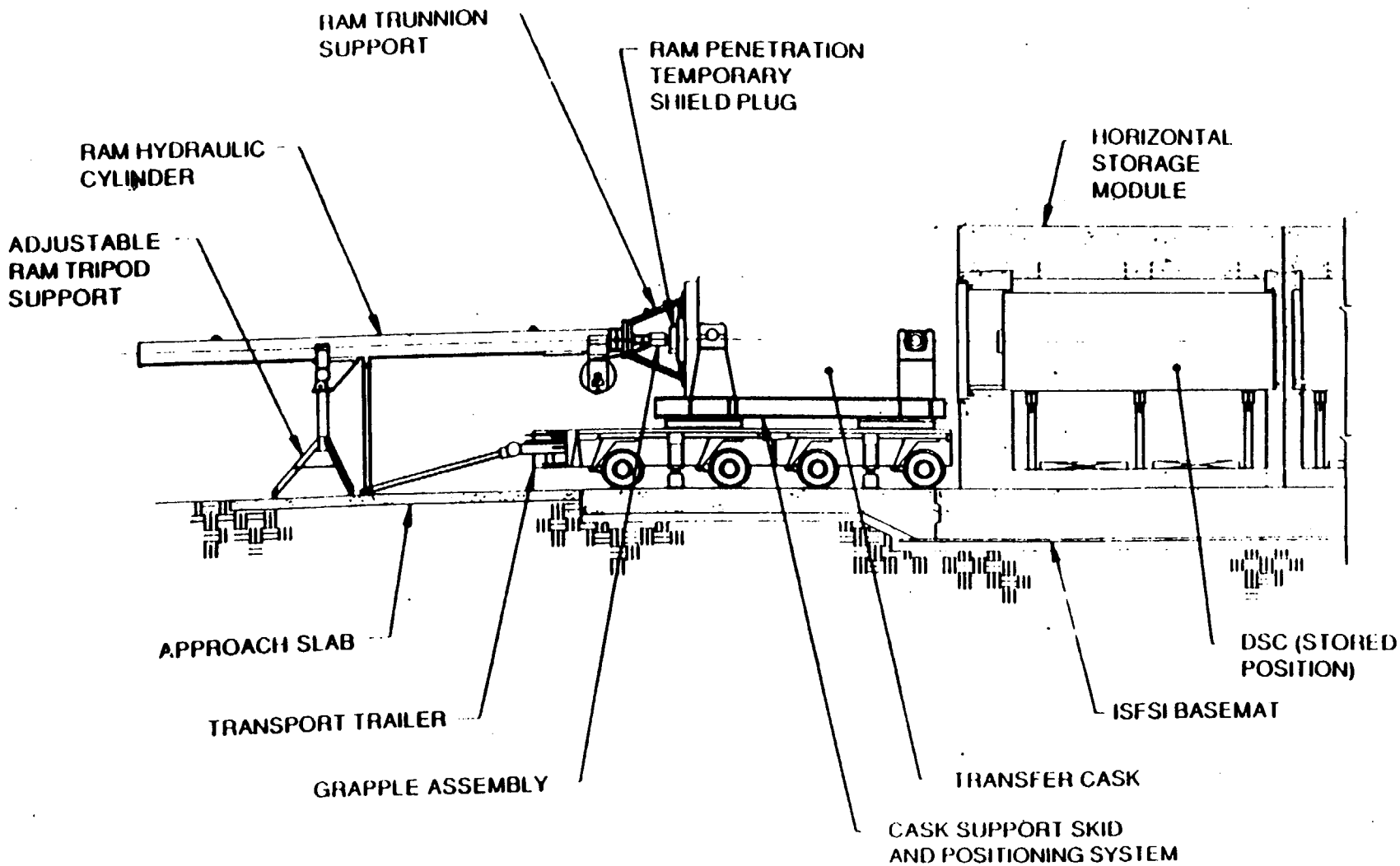

Figure 1.6

NUHOMS® System Components, Structures, and Transfer Equipment Elevation View

2.0 PRINCIPAL DESIGN CRITERIA

2.1 Introduction

10 CFR 72.236(b) requires that design bases and design criteria must be provided for structures, systems and components important to safety. The criteria for the design, fabrication, construction, testing and performance of components important to safety are set forth in the general requirements of 10 CFR 72.236(a) through (i). In addition, this SER addresses the staff's consideration of design criteria in 10 CFR 72, Subpart F, "General Design Criteria For Independent Spent Fuel Storage Facilities (ISFSI)."

The following subsections discuss the design criteria applied by the NRC staff to the standardized NUHOMS system and the degree to which the design as described in the SAR is in compliance with these criteria. The subsection headings generally correspond to criteria in 10 CFR 72, Subpart F and 10 CFR 72.236.

Section 3.0 of the SAR contains the design criteria proposed by the standardized NUHOMS system vendor. It also identifies sources for these design criteria. The sources and their acceptability are summarized in Table 2.1 of this report. As shown in the table, the identified sources were determined to be acceptable.

2.2 Fuel to be Stored

10 CFR 72.236(a) requires that a specification for the spent fuel to be stored in the cask be provided, including type of spent fuel (i.e., BWR, PWR, both), maximum allowable enrichment of the fuel before irradiation, burn-up, minimum acceptable cooling time of the spent fuel before storage in the cask, maximum heat designed to be dissipated, maximum spent fuel loading limit, condition of the spent fuel, and inerting atmosphere requirements.

The fuel specified to be stored in the standardized NUHOMS system is intact (not consolidated) PWR or BWR, with physical characteristics presented in Table 12-1a and 12-1b of the SER. The related characteristics and parameters of the fuel to be stored are determined by assumptions used by the vendor to analyze and evaluate the capabilities of the system, such as criticality safety, shielding, heat removal, confinement, and the limitations imposed by these analyses in meeting acceptance criteria. The fuel specification, accepted by the staff, is presented in Section 12.2.1 of this report.

2.3 Quality Standards

The quality standards considered by the staff for the spent fuel storage system are in 10 CFR 72.122(a) and in 10 CFR 72.234(b). 10 CFR 72.122(a) provides that structures, systems and components important to safety must be designed, fabricated, erected, and tested to quality standards commensurate with the importance to safety of the function to be performed.

10 CFR 72.234(b) requires that the design, fabrication, testing and maintenance of spent fuel storage casks must be conducted under a quality assurance program that meets the requirements of Subpart G of 10 CFR 72.

Quality standards dealing with the design, materials, fabrication techniques, inspection methods, etc., are cited by the vendor in the sections of the SAR where the standards are applicable. Judgments regarding the adequacy of these standards are also presented in the corresponding sections of this report.

The Quality Assurance program proposed by the vendor for the design, fabrication and construction of the standardized NUHOMS system is presented in Section 11.0 of the SAR. The staff's evaluation of the vendor's Quality Assurance program is discussed in Section 10.0 of this report.

2.4 Protection Against Environmental Conditions and Natural Phenomena

10 CFR 72.236(b) requires design bases and design criteria for structures, systems and component important to safety. 10 CFR 72.122(b) provides that structures, systems, and components important to safety must be designed to accommodate the effects of, and to be compatible with, site characteristics and environmental conditions associated with normal operation, maintenance, and testing of the ISFSI and to withstand postulated accidents. It also provides that structures, systems, and components important to safety must be designed to withstand the effects of natural phenomena such as earthquakes, tornadoes, lightning, hurricanes, floods, tsunami, and seiches, without impairing their capability to perform safety functions.

The standardized NUHOMS system is intended to withstand environmental conditions and natural phenomena that may occur under "normal," "off-normal," and "accident" circumstances. Design criteria call for normal and off-normal conditions (such as would probably occur at some time during the operational life of the installation) to both satisfy allowable and limits for routine normal operations. Extreme environmental conditions which could possibly occur, such as tornadoes, tornado missiles, earthquakes, and floods, are treated as accidents. Higher allowable stresses and some permanent deformation may be permitted for "accidents." Temperature extremes have both normal/off-normal and accident sets of values and corresponding stress or strength limit criteria.

The principal design criteria used for structural design are listed in Tables 2.2 (normal), 2.3 (off-normal), and 2.4 (accident). Column (5) of Table 2.2, 2.3, and 2.4 includes comments on applicability of the criteria for use of the standardized NUHOMS system at possible sites. Some criteria are acceptable and are not affected by the actual site. Some criteria vary by location, but the values used in the SAR are sufficient to envelope the values that may be appropriate for credible sites in the continental United States. Other criteria should be verified as bounding the proper values for the specific installation location.

The SAR does not present a HSM foundation design for certification. The foundation design shown in the drawing is considered a nominal design for illustration. This foundation design is probably adequate or conservative for many potential sites given appropriate site preparation. A foundation analysis should be performed for verification of the adequacy of the nominal design or to provide the basis for a new design specific to the installation.

The foundation is not relied upon to provide safety functions. There are no structural connections or means to transfer shear between the HSM base unit module and the foundation slab. However, the user must evaluate the foundation in accordance with 10 CFR 72.212(b)2 and (b)(3) to ensure that, in an unlikely event, no gross failures would occur that would cause the DSC to jam during transfer operation, or cause the standardized NUHOMS system to be in an unanalysed situation, and would prevent removal of a DSC from a HSM.

Evaluation of an ISFSI design is accomplished by evaluating the stated criteria and the actual design as separate review stages. Criteria may be acceptable, but if the actual design does not meet the criteria the system may not be acceptable. Similarly, some proposed criteria may not be acceptable, however, because of conservatism in the actual design, it may be determined to satisfy more stringent, yet acceptable, criteria.

2.4.1 Normal Operating Conditions

The staff considers that the design criteria as stated and referenced in Table 2.2 are acceptable for certification with the following exception: in principle, the DSC should be considered a live load rather than treated as a dead load as in the SAR. The weight of the DSC is precisely known; however, any additional loads associated with its transfer are treated as live loads. Based on staff review of the design, factors of safety, and impact of treatment as a dead load, the usage in the SAR is accepted. It has been determined that the factor of safety, if the DSC were treated as a live load, would still be acceptable for the actual design.

Section 8.1.1.1 of the SAR states that the long-term average yearly ambient temperature is assumed to be 21°C (70°F). This temperature bounds most, but not all, reactor sites in the Continental United States. Reactor sites which exceed this temperature are Palo Verde, Turkey Point, and St. Lucie.

The SAR states that the design basis operating temperatures are -40°C to 52°C (-40°F to 125°F). While this temperature range is acceptable for storage, it is not acceptable for on-site transfer or lifting and handling of the DSC. Paragraph 10.3.15 of the SAR states that the minimum ambient temperature for transfer of the loaded DSC inside the TC manufactured from ferritic steel shall be -17.8°C (0°F). Furthermore, if the ambient temperature exceeds 37.8°C (100°F), a solar shield shall be provided to protect the solid neutron shield material contained in an annular volume of the TC. No lifting above 203 cm (80 inches) of the loaded DSC is permissible below -28.9°C (-20°F) inside the spent fuel pool building. If the lift height exceeds 203 cm (80 inches), then the minimum temperature

restricted to -17.8°C (0°F) for lifting inside the spent fuel pool building. The appropriate criteria for impact testing of ferritic steels for the DSC shell or basket is NUREG/CR-1815 (Reference 7).

Similarly, the SAR states that the design basis operating temperatures are -40°C to 52°C (-40°F to 125°F) for the TC. This temperatures range is acceptable for handling the empty TC; however, for lift heights of 203 cm (80 inches) or lower the minimum limiting temperature for handling a TC with a loaded DSC shall be restricted to -28.9°C (-20°F). This limiting minimum temperature shall apply inside the spent fuel pool building. For lift heights above 203 cm (80 inches) inside the spent fuel pool building, the minimum temperature is restricted to -17.8°C (0°F). For all transfer operations outside the spent fuel pool building, the maximum height is limited to 203 cm (80 inches) and the minimum temperature is limited to -17.8°C (0°F). The appropriate criteria for impact testing of ferritic steels for the TC is ANSI N14.6 paragraph 4.2.6 (Reference 8).

2.4.2 Off-Normal Operating Conditions

Table 2.3 lists summary design criteria used for off-normal operating conditions. The staff considers that the design criteria stated and referenced in Table 2.3 are acceptable and appropriate with the following exceptions:

- The jammed condition loading for the DSC support assembly is properly listed as an off-normal condition; however, it is actually used in the load combinations as though it were an "accident" loading. The NRC requires normal and off-normal loads to be evaluated similarly in load combination expressions without use of the increases in stresses permitted for "accident" type loads.

- The DSC support assembly does not have criteria identified for off-normal temperature rise. This is considered not acceptable, however the actual design is determined to satisfy criteria which should have been listed.

- Identical minimum service temperature restrictions apply to the transfer of the loaded DSC and the TC with a loaded DSC, as described in 2.4.1 above.

2.4.3 Accident Conditions

Table 2.4 lists summary design criteria used for accident conditions. These conditions include extreme natural phenomena, accidental drops and impacts, fire, and explosions.

The staff considers that the design criteria as stated are acceptable with the exception that the jammed loading condition was treated as an accident (discussed above). Where other criteria

as determined by the staff are considered more appropriate, the criteria are stated in the table and are determined to be conservative and thereby acceptable.

The following accident design criteria should be verified as equal to or exceeding appropriate parameters for the actual installation site.

- Flood parameters, especially the 4.6 m per second (15 foot per second) maximum velocity.
- Seismic maximum horizontal and vertical ground accelerations.
- Maximum ambient temperature.
- Potential for fire or explosion, Section 2.5, below.
- Requirements for lightning protection.
- Extreme low temperature, see Section 3.0, below.
- Maximum lift height of loaded DSC to 203 cm (80 inches) outside the spent fuel pool.

It is recognized that some other environmental condition limits used in the SAR and SER may not envelope all points within the continental United States. These are not included in the above list of criteria to be verified due to their negligible impact on the design and due to the otherwise unsuitability of the exceptional locations for ISFSI.

2.4.4 Load Combinations

Load combinations presented in the SAR for use in verification of design are presented for the HSM in Table 2.5 and for the DSC Support Assembly in Table 2.6. Staff comments are included in the tables on the acceptability and use of the load combinations.

As annotated in the tables, the load combinations used and omitted are considered acceptable with the exception of that used for the "off-normal" case of a jammed DSC loading the DSC support assembly (Table 2.5). The combinations used (numbers 15 and 16) have factored strengths (1.7 for strength or stress in other than shear, 1.4 for shear) which are not appropriate for off-normal loads.

In addition to specifying load combinations to be used for the design of the HSM, the SAR also specified design load combinations for the DSC and the TC. In both cases, parts of the ASME B&PV Code Section III are used (Reference 9). These definitions of normal, off-normal, and accident operations are discussed. Tables 8.1-1 and 8.1-1a in the SAR define types of loads for all components for normal and off-normal conditions respectively.

Normal loads for the DSC shell include deadweight, internal pressure, thermal loads, and normal handling loads. The DSC basket is not subjected to internal pressure loads. Normal loads for the TC include deadweight, thermal, normal handling and live loads. These load combinations correspond to Service Level A in the ASME Code.

Off-normal loads for the DSC shell include deadweight, internal pressure, off-normal temperature loads and off-normal handling loads. The DSC internals are subjected to deadweight and off-normal thermal loads. The TC is subjected to combined loads including deadweight, off-normal thermal and off-normal handling loads. These load combinations correspond to Service Level B in the ASME Code.

Table 8.2-1 of the SAR defines the various load combinations for the accident loads, or Service Levels C and D of the ASME Code. The accidents considered for the DSC include: earthquake, flood, accidental drop, blockage of HSM inlet and outlet vents, and accidental internal pressure. The accidents considered for the TC include: tornado wind and tornado wind driven missiles, earthquake, accidental drop, and loss of cask neutron shield.

2.5 Protection Against Fire and Explosion

10 CFR 72.172(c) contains criteria for fire protection which the staff has considered. Section 3.3.6 of the SAR addresses the credibility of ISFSI initiated fires and explosions.

As noted in Table 2.4, the SAR states that design criteria for fire or explosion are "enveloped by other design events." This SER evaluation recognizes that the probability of a fire or explosion affecting standardized NUHOMS system nuclear safety varies with potential installation sites, procedures and equipment used for transfer actions, and possible accidents at or in the vicinity of the system (e.g., aircraft and vehicle crashes, railroad, truck, or pipeline fires and explosions).

The SAR did not identify specific criteria for fire and explosion. It stated that such events were bounded by other criteria. Externally initiated explosions are considered in the SAR to be bounded by design basis tornado generated missiles. The DSC can withstand the external pressure of a flood of a head of water equal to 15.2 m (50 feet). For certification of the design, appropriate basic criteria could be based on limits associated with nuclear safety such as:

- Maintenance of acceptable radiation shielding to keep exterior surface dose rates within acceptable limits.
- Maintenance of physical protection of the DSC from other events.
- Limiting the maximum temperature reached by cladding to the acceptable limit.
- Limiting stresses and deformations of the DSC shell due to temperature and/or loads to ensure that rupture of that confinement barrier is not risked.
- Limiting stresses and deformation of the interior spaces, support, and positioning elements with the DSC due to temperature and/or accelerations to ensure acceptable spacing and retrieval of IFAs.

The load limits, expressed in load combinations involving other design loads, should provide adequate criteria to satisfy the above. However, the user must not assume that the temperatures, accelerations, missile impacts, and other loads examined for the certification cannot be exceeded by credible fires and explosions regardless of site location and other circumstances. 10 CFR 72.212(b)(2) requires written evaluations to establish that certificate conditions are met with respect to fire and explosion because a potential exists for all sites in the use of internal combustion engine-powered transport trailer.

Accordingly, verification that loadings resulting from potential fires and explosions do not exceed those used in the SAR for other events and conditions, is required for installation of the standardized NUHOMS systems in accordance with 10 CFR 72.212(b)(2).

2.6 Confinement Barriers and Systems

The staff considered 10 CFR 72.122(h) which provides that confinement barriers and systems shall: "(1) protect the spent fuel cladding against degradation that leads to gross ruptures or the fuel must be otherwise confined such that degradation of the fuel during storage will not pose operational safety problems"; (2) must provide ventilation and off-gas systems "where necessary to ensure the confinement of airborne radioactive particulate materials during normal or off-normal conditions"; (3) "must have the capability for continuous monitoring in a manner such that the licensee will be able to determine when corrective action needs to be taken"; (4) "must be packaged in a manner that allows handling and retrievability without the release of radioactive materials to the environment or radiation exposures in excess of 10 CFR Part 20 limits."

The staff has reviewed the features of the DSC design which provide confinement of radioactive material and, specifically, protection of the spent fuel assemblies. The protection of the spent fuel assemblies depends on two conditions: (1) appropriate fuel clad temperature is not exceeded, and (2) the inert helium atmosphere does not leak out. The first condition is met by thermal hydraulic analyses. See SER Section 4.0. The maintenance of the helium atmosphere is discussed below. The review was directed at two aspects of the design: the integrity of the DSC and the allowable leak rate. Confinement is ensured by a combination of inspection techniques, including radiographic inspection, dye penetrant testing, and helium leak testing.

The SAR takes the position that the inert helium atmosphere in the DSC will not leak out and that the fuel cladding temperature will be held below levels at which damage could occur. The staff determined that this position is acceptable as a criterion. The staff accepts that the helium atmosphere will be maintained during storage. This is based on the specified acceptance leak rate for the primary seal weld of $\leq$ 0.01 kPa-cc/sec (10^{-4} atm-cc/sec), as well as on the integrity of the DSC. The confinement integrity is ensured by the use of stainless steel, thus precluding corrosion of the DSC, and also by the design criteria which include accident cases such as a drop.

10 CFR 72.236(e) requires that the cask must be designed to provide redundant sealing of confinement systems. Although not expressed as a design criterion, the standardized NUHOMS system employs redundant sealing as discussed in Section 5.0 of the report.

10 CFR 236(j) requires that the cask must be inspected to ascertain that there are no cracks, pinholes, uncontrolled voids, or other defects that could significantly reduce its confinement effectiveness. The quality standards under which the DSC is fabricated and welded provide the assurance of confinement integrity. In addition, the DSC is pressurized and leak tested after all confinement welds have been completed, in accordance with procedures described in SAR Section 10.3.4.

The criteria for continuous monitoring are issues which have also been evaluated by the NRC staff. To date, under the general license, NRC has accepted continuous pressure monitoring of the inert helium atmosphere as an indicator of acceptable performance of mechanical closure seals for dry spent fuel storage casks. The NRC does not consider such continuous monitoring for the standardized NUHOMS system double weld seals for the DSC to be necessary because: (1) there are no known long-term degradation mechanisms which would cause the seals to fail within the design life of the DSC; (2) the possibility of corrosion has been provided for in the design because the canister is stainless steel; (3) the creep mechanism is not plausible, because the internal storage pressure is approximately atmospheric, (4) cyclic loading has been considered, and it is below the threshold which the ASME B&PV Code Section III has established; (5) the internal atmosphere in the DSC cavity is inert helium gas.

Therefore, an individual continuous monitoring device for each DSC is not necessary. However, the NRC considers that other forms of monitoring storage confinement systems including periodic surveillance, inspection and survey requirements, and application of preexisting radiological environmental monitoring programs of 10 CFR Part 50 licensees during the period of use of the DSC canisters with seal weld closures can adequately satisfy the criteria in 10 CFR 72.122(h)(4).

2.7 Instrumentation and Control Systems

The staff considered 10 CFR 72.126 which provides the provision of (1) protection systems for radiation exposure control; (2) radiological alarm systems; (3) systems for monitoring effluents and direct radiation; and (4) systems to control the release of radioactive materials in effluents. The SAR takes the position (Paragraph 3.3.3.2) that, because of the passive nature of the standardized NUHOMS system, no safety related instrumentation is necessary. Since the DSC was conservatively designed to perform its confinement function during all worst-case conditions, as has been shown by analysis, there is no need to monitor the internal cavity of the DSC for temperature or pressure during normal operations.

The staff also considered 10 CFR 72.122(i) which provides that an ISFSI should have the capability to test and monitor components important to safety. The user of the standardized

NUHOMS system will, as provided in Chapter 12, be required to verify by a temperature measurement, the system thermal performance on a daily basis to identify conditions which threaten to approach design temperature criteria. The user will also be required to conduct a daily visual surveillance of the air inlets and outlets as provided in Chapter 12. Therefore, the criteria in of 10 CFR 72.122(i) are satisfied.

While the DSC and HSM are considered components important to safety that comprise the standardized NUHOMS system design, they are not considered operating systems in the same sense as spent fuel pool cooling water systems or ventilation systems which may require other instrumentation and control systems to ensure proper functioning. Hence, due to this passive design, temperature monitoring and surveillance activities are appropriate and sufficient for this design. They ensure adequate protection of the public health and safety and meet the criteria in 10 CFR 72.122(i). Given the passive nature and inherent safety, there is no technical reason to require other instrumentation and control systems for monitoring the standardized NUHOMS system during storage operations.

Non-safety related instrumentation that would be used within a fuel pool facility during loading, unloading, and decontamination is considered by the SAR (Paragraph 3.3.3.1) as being covered by the user's 10 CFR Part 50 license. Instruments used in fuel pool facilities that would be used with DSC loading and unloading operations, and for other operations, include instruments measuring the boron content of the spent fuel pool water and the surface contamination and/or dose rates of the DSC and TC.

Additional instrumentation that may be used in fuel pool facilities that may not already be used in current operations would provide: helium leak detection of the DSC welds, helium pressure in the DSC, and vacuum measurement of the DSC. These instruments may also be used for weld inspection. Formal NRC evaluation of instrument use within fuel pool facilities is in conjunction with 10 CFR Part 50 review of an updated FSAR and associated documentation.

Instrumentation used outside of the fuel pool facility and specifically associated with the ISFSI operations would be as follows:

- Prime mover instruments. The principal concern is that prime mover instruments be operational, support any velocity restrictions and reduce the probability of vehicle malfunction or fire.

- Measurement of the HSM surface dose rates.

- Measurement of air temperature rise through the HSM following loading.

- Measurement of hydraulic pressure for the ram with pressure gauges.

- Alignment of cask and ram with HSM using optical survey equipment.

Use of the instruments is summarily described in Sections 5 and 10 of the SAR (by statements and by inclusions SAR paragraph 10.3.5.2, 10.3.5.6, and 10.3.4.1 by reference).

The staff considers the descriptions of instrumentation usage and commitment to preparation of operating procedures, which should include use of the instruments, to be satisfactory for certification.

2.8 Nuclear Criticality Safety

To address nuclear criticality safety, the staff considered the provisions of 10 CFR 72.124 and 10 CFR 72.236(c). 10 CFR 72.124 provides that the system should be designed to be maintained subcritical and to ensure that, before a nuclear criticality accident is possible, at least two unlikely, independent, and concurrent or sequential changes have occurred in the conditions essential to nuclear criticality safety. The design of the system must include margins of safety for the nuclear criticality parameters that are commensurate with the uncertainties in the data and methods used in calculations and demonstrate safety for the handling, packaging, transfer and storage conditions and in the nature of the immediate environment under accident conditions. The design must also be based on favorable geometry, permanently fixed neutron absorbing materials, or both. 10 CFR 72.236(c) requires that the cask must be designed and fabricated so that the spent fuel is maintained in a subcritical condition under credible conditions.

The proposed criticality safety criteria for the standardized NUHOMS system are discussed in Section 3.0 of the SAR. The standardized NUHOMS system is designed to maintain nuclear criticality safety under normal handling and storage conditions, off-normal handling, and hypothetical accident conditions. According to the SAR, the principal criticality design criteria is that k_{eff}, which includes error contingencies and calculational and modeling biases, remain below 0.95 during both normal operation and accident conditions. The design basis accident is defined as the inadvertent misloading of the DSC with unirradiated fuel of the maximum allowable enrichment.

The NRC staff considers that the proposed criteria satisfy 10 CFR 72.124 and 72.236(c) with the following conditions/observations:

For the Standardized NUHOMS-24P Design

1. The vendor is required to include an additional constraint of limiting the initial enrichment equivalent of stored PWR fuel assemblies to 1.45 wt.% U-235 so that the optimal moderated array reactivity is less than 0.95 (including bias and uncertainties). The initial enrichment equivalent of an irradiated fuel assembly is the U-235 enrichment of unirradiated fuel assemblies which would give the same reactivity as the irradiated fuel array. Although not included as a criterion, this constraint is included in the proposed specification for the fuel to be stored. (See Table 12-1a.)

For the Standardized NUHOMS-52B Design

2. The vendor is required to include a constraint of limiting the initial fuel enrichment of stored BWR fuel assemblies to 4.0 wt.% U-235.

3. The vendor is required to ensure a minimum fixed absorber plate boron content of 0.75 wt.% boron in the fabrication of the DSC. (See Table 12-1b.)

The staff's evaluation of the nuclear criticality safety for the standardized NUHOMS system is included in Section 7.0 of this report.

2.9 Radiological Protection

With respect to on-site protection, Section 20.1201(a) of 10 CFR Part 20 states that the licensee shall control the occupational dose to individual adults to the dose limits specified in 1201(a)(1) and 1201(a)(2). Also, section 20.1101 of 10 CFR Part 20 states that each licensee shall develop, document, and implement a radiation protection program and that the licensee shall use, to the extent practical, procedures and engineering controls based upon sound radiation protection principles to achieve occupational doses and doses to members of the public that are as low as is reasonably achievable (ALARA).

Section 72.126 provides for the provision of: (1) protection systems for radiation exposure control; (2) radiological alarm systems; (3) systems for monitoring effluents and direct radiation; and (4) systems to control the release of radioactive materials in effluents.

Guidance for ALARA considerations is also provided in NRC Regulatory Guides 8.8 and 8.10 (References 10 and 11).

For off-site radiological protection, the staff considered the requirements contained in 10 CFR 72.104(a) for normal operations and anticipated occurrences, and 10 CFR 72.106(b) for design basis accidents. In addition, the staff considered the dose limitations in 10 CFR Part 20 including the requirement that doses to members of the public must be as low as is reasonably achievable.

The radiological protection design features of the standardized NUHOMS system are described in Chapters 3 and 7 of the SAR and are evaluated in Section 8.0 of this SER. These features consist of: (1) radiation shielding provided by the transfer cask, DSC, and HSM; (2) radioactive material containment within the DSC; (3) prevention of external surface contamination; and (4) site access control. Access to the site of the standardized NUHOMS system array, which is a site-specific issue not specifically addressed in the SAR, would be restricted to comply with 10 CFR 72.106 controlled area requirements.

Based on analyses presented in the SAR (discussed in Section 8.0 of this SER), the staff concludes that the standardized NUHOMS system, if properly sited, meets the design criteria for on-site and off-site radiological protection, including the incorporation of ALARA principles.

2.10 Spent Fuel and Radioactive Waste Storage and Handling

The staff considered 10 CFR 72.128(a), which provides that the spent fuel and radioactive waste storage systems should be designed to ensure adequate safety under normal and accident conditions. These systems must be designed with (1) a capability to test and monitor components important to safety; (2) suitable shielding for radiation protection under normal and accident conditions; (3) confinement structures and systems; (4) a heat-removal capability having testability and reliability consistent with its importance to safety, and (5) means to minimize the quantity of radioactive waste generated. Section 72.128(b) further states that radioactive waste treatment facilities should be provided for the packing of site-generated low-level wastes in a form suitable for storage on-site awaiting transfer to disposal sites.

Criteria covering items (1) through (4) above have been addressed throughout the preceding sections in this SER in the preceding sections of this Chapter. The SAR does not specifically address the issue of minimization of radioactive waste generation. Solid wastes will likely be limited to small amounts of sampling or decontamination materials such as rags or swabs, while liquid wastes will consist mainly of small amounts of liquid resulting from decontamination activities. Contaminated water from the spent fuel pool and potentially contaminated air and helium from the DSC, which are generated during cask loading operations, will be treated using plant-specific systems and procedures. No radioactive wastes requiring treatment are generated during the storage period during either normal operating or accident conditions.

The staff agrees that the design of the standardized NUHOMS system provides for minimal generation of radioactive wastes, and that any wastes that are generated would be easily accommodated by existing plant-specific treatment or storage facilities.

2.11 Decommissioning/Decontamination

Under 10 CFR 72.236(i), considerations for decommissioning and decontamination must be included in the design of an ISFSI. In this regard the staff has considered 10 CFR 72.130 that provisions should be incorporated to: (1) decontaminate structures and equipment; (2) minimize the quantity of waste and contaminated equipment; and (3) facilitate removal of radioactive waste and contaminated materials at the time of decommissioning.

10 CFR 72.30 defines the need for a decommissioning plan which includes financing. Such a plan, however, is not considered applicable to this review. The cost of decommissioning the ISFSI must be considered in the overall cost of decommissioning the reactor site.

To facilitate decommissioning of the HSM, the design should be such that:

(1) There is no credible chain of events which would result in widespread contamination outside of the DSC; and

(2) Contamination of the external surfaces of the DSC must be maintained below applicable surface contamination limits. The SAR uses the following smearable (non-fixed) surface removable contamination limits as a limiting condition for operation:

Beta-gamma emitters:	36.5 Bq/100 cm^2 (2200 dpm/100 cm^2)
Alpha emitters:	3.65 Bq/100 cm^2 (220 dpm/100 cm^2)

Decommissioning considerations are described in Sections 3.5 and 9.6 of the SAR and are evaluated in Section 9.0 of this report.

The staff acknowledges that decommissioning considerations are sometimes in conflict with other requirements. The reinforced structure of the HSM, for example, will require considerable effort to demolish. Although it is not likely that significant contamination can spread beyond the DSC, demolition of the HSM may generate slightly contaminated dust. However, the staff concurs that primary concern in such cases rests with operational safety considerations, and ease of decommissioning is a secondary consideration. In this regard, the staff concludes that adequate attention has been paid to decommissioning in the design of the standardized NUHOMS system.

2.12 Criteria for Fuel Stability

The staff considered the general design criteria set forth in Section 72.122(h) on "Confinement Barriers and Systems." Paragraph (1) of this section provides that "spent fuel cladding must be protected during storage against degradation that leads to gross rupture" and "that degradation of the fuel during storage will not pose operational safety problems with respect to its removal from storage." This aspect of the standardized NUHOMS system design is discussed in Section 2.6 of this SER. Paragraphs (2) and (3) in Section 72.122(h) relate to underwater storage of fuel and to ventilation and off-gas systems, respectively, and are therefore not considered in this review. Paragraphs (4) and (5) deal with monitoring and handling and retrievability operations, respectively, and are addressed in Sections 2.6, 2.7 and 2.10 of this document.

2.13 Findings and Conclusions

Tables 2.2, 2.3, and 2.4 summarize the principal design criteria for the standardized NUHOMS system components important to safety. Criteria identified in the SAR for design of the standardized NUHOMS system are acceptable with the exceptions noted below. These

findings and conclusions apply to criteria and not the actual design (see "Conclusions/Discussion" paragraph at the end of each Section).

Exceptions related to the HSM and its integral DSC Support Assembly and their resolution are summarized below:

- There are criteria used which may not be acceptable for all potential sites in the continental United States for: earthquake maximum ground accelerations, lightning, flood, and maximum ambient temperature. Uses of the standardized NUHOMS system at individual sites requires verification that the appropriate site parameters and that these parameters are within the acceptable design criteria.

- Fire and explosion loads are assumed to be within maximums for other included loadings. Use of the standardized NUHOMS system at a site requires examinations of potential causes and magnitudes of fires and explosions, and verification that site parameters are bounded by appropriate design criteria evaluated in this SER.

- The loads associated with a jammed DSC are acceptable; however, evaluation of those loads in a load combination expression unintended for "accidents" is not acceptable. Although the usage of the criteria is not acceptable, the staff has determined that the actual design, evaluated with the acceptable load combination expression, is acceptable.

The SAR includes a nominal design for the HSM foundation. The foundation only has nuclear safety implications in the event of gross failure, since it is structurally independent of (although loaded by) the supported HSM. Suitability of the HSM foundation design of the SAR should be verified for the actual site by a foundation analysis, or an alternative foundation design should be used for the site. The user must perform written evaluations before use to establish that cask storage pads have been designed in accordance with 10 CFR 72.212(b)(2) and (b)(3) to ensure that no gross failures occurred that could cause the standarized NUHOMS system to be in an unanalyzed situation.

TABLE 2.1 Design Criteria Sources Cited in the SAR
[*DS-Docketed submittals which modify and/or extend the SAR presentation]

SAR Reference	Source	Use	NRC Comments
3.2.5.1	ANSI/ANS 57.9-1984	Load combinations for HSM Design	Acceptable
3.2.5.2	ASME B&PV Code (1983) Section III, Div. 1, Subsection NB and NF for Class 1 Components and Supports	Subsection NB used for stress analysis and allowable stresses for DSC shell and lids. Subsection NF used for stress analysis and allowable stresses for DSC basket.	Acceptable
3.2.5.2	ASME B&PV Code (1983) Section III, Div. 1, Subsection NC for Class 2 Components	TC stress analysis and allowable stresses excluding the lifting/tilting trunnions.	Acceptable
3.2.5.3	ANSI N14.6-1986	Allowable stresses for lifting trunnions inside fuel building.	Acceptable
Table 3.2-1	ACI-318-83	Construction criteria for concrete HSM.	Acceptable
Table 3.2-1	AISC Code for Structural Steel	DSC Support Assembly Design.	Acceptable for design stresses, but not load combinations.
Table 3.2-1	ASME B&PV Code (1983) Section III, Subsection NC	Allowable stresses for lifting and support trunnions on-site transfer for TC.	Acceptable
3.3.4.1.1.A.	ORNL/NUREG/CSD-2	"SCALE-3" Code used for Criticality Analysis	Acceptable
3.3.4.1.2.A.	STUDSVIK/NR-81/3	"CASMO-2" Code for Fuel Burnup	Acceptable
3.3.4.1.2.A.	DPC-NE-1002A	Duke Power Co. Reload Methodology	Acceptable
3.3.4.1.2.A.	RF-78/6293	STUDSVIK CASMO Benchmark	Acceptable
3.3.4.1.2.A.	STUDSVIK/NR-81/61	CASMO Benchmark	Acceptable
3.6	NUREG/CR-2397	Fuel Assembly Thermal Parameters	Acceptable
3.6	ORNL/TM-7431	Fuel Assembly Thermal Parameters	Acceptable
3.6	ANSI/ANS-5.1-1979	Fuel Assembly Thermal Parameters	Acceptable

Table 2.1 Design Criteria Sources Cited in the SAR (Continued)
[*DS-Docketed submittals which modify and/or extend the SAR presentation]

SAR Reference	Source	Use	NRC Comments
3.6	A.D. Little, Inc., "Tech. Supt for Rad Stds. Hi-Lvl Rad Waste Mgt"	Fuel Assembly Thermal Parameters	Acceptable
3.1.1.3, Tbl 3.1-4a Tbl 3.1-4b	NUREG\CR-2397 NUREG\CR-0200 DOE\RW-0184	Development of radiological characteristics using ORIGEN	Acceptable
3.1.2.1	Reg. Guide 1.60	Seismic Design Response Spectra	Acceptable
3.1.2.1	Reg. Guide 1.61	Seismic Design Damping Values	Acceptable
3.1.2.1	ANSI/ANS-57.9-1984	Operational Handling Loads	Acceptable
3.1.2.1	ANSI/ANS-57.9-1984	Accidental Drop Loads	Acceptable
3.1.2.1	ANSI/ANS-57.9-1984	Thermal and Dead Loads	Acceptable
3.1.2.1	Reg. Guide 1.76	Tornado Wind Loads	Acceptable
3.1.2.1	NUREG-0800	Impact Force Criteria, Tornado Missiles, Recommended Empirical Formula Use	Acceptable
3.2	ANSI/ANS-57.9-1984	Extreme Environmental and Natural Phenomena	Acceptable
3.2.1.2	ANSI A58.1-1982	Tornado Wind MPH to Pressure Conversion	Acceptable
3.2.1.2	Bechtel BC-TOP-9-A	Method for Determining Impact Force for Design of Local Reinforcing	Not an accepted source, but the results of PNFS calculations are acceptable.
3.2.3	10 CFR 72 10 CFR 100, Appendix A Reg. Guide 1.60 Reg. Guide 1.61	Seismic Criteria and Basis for Criteria	Acceptable
3.2.4	ANSI A58.1-1982	Snow and Ice Loads	Acceptable

Table 2.1 Design Criteria Sources Cited in the SAR (Continued)
[*DS-Docketed submittals which modify and/or extend the SAR presentation]

SAR Reference	Source	Use	NRC Comments
3.2.5.1	ACI-349-1985	Reinforced Concrete Design	Acceptable however ACI-349-80 is currently approved by NRC (per Reg. Guide 3.60).
3.3.4.1.2A	SAND 86-0151	Major neutron absorbers	Reference has not been used in NRC review. The NRC accepts credit for boron in pool water. The use of burnup credit for storage casks is not approved.
3.3.4.1.3A	ANSI/ANS-57.2-1983	Criticality Criteria	Acceptable
3.3.4.1.3A	ANSI/ANS-8.17-1984	Credit for Burnup	Reference not used in NRC review. NRC accepts credit for boron in pool water. Use of burnup credit for storage casks is not approved.
3.3.4.1.3A	PNL-2438	Sources of Negative Reactivity	Reference not used in NRC review. NRC accepts credit for boron in pool water. Use of burnup credit for storage casks is not approved.
3.3.4.1.3C	EPRI - NP-196	Critical Experiment Benchmarks	Reference not used in NRC review.
3.3.4.1.4A	ANSI/ANS 8.17-1984	Double Contingency Principle	Reference not used in NRC review.
3.3.4.2.2	ORNL CCC-548	"KENO5A-PC" Monte Carlo Code	Acceptable
3.3.4.2.3A	NUREG/CR-1784	Criticality Experiments	Reference not used in NRC review.
3.3.4.2.3C	NUREG/CR-0073	Criticality Separation	Reference not used in NRC review.

Table 2.1 Design Criteria Sources Cited in the SAR (Continued)
[*DS-Docketed submittals which modify and/or extend the SAR presentation]

SAR Reference	Source	Use	NRC Comments
3.3.4.2.3C	NUREG/CR-0796	Criticality Experiments	Reference not used in NRC review.
3.3.4.2.3C	BAW-1484-7	Criticality Experiments B&W	Acceptable
3.3.4.2.3C	PNL-6838	Reactivity Measurements	Acceptable
3.3.4.2.3D	ORNL/TM-10902	Physical Characteristics of GE Fuel	Reference not used in NRC review.
3.3.7.1.1	PNL-6189	Fuel Cladding Temperature Limits	Acceptable
3.3.7.1.1	PNL-4835	Fuel Cladding Temperature Limits	Acceptable
3.4.4.1	NUREG/0612	Lifting Devices Criteria	Acceptable
Not cited	NUREG/CR-1815	Brittle Fracture Criteria for Ferritic Steel	Acceptable, used in NRC review.

Table 2.2 Evaluation of Design Criteria for Normal Operating Conditions
[Columns (1) - (5) are extracted from SAR Tables 3.2-1 and 3.2-5]

Component (1)	Design Load Type (2)	Reference (3)	Design Parameters (4)	Applicable Codes (5)	NRC Staff Comments (6)
HSM	Dead Load	SAR 8.1.1.5	Dead weight including loaded DSC	ANSI 57.9-1984 ACI 349-85 and ACI 349R-85	Acceptable, site immaterial. Although DSC is actually a "live load," DSC weight is precisely known.
	Load Combination	SAR Table 3.2-5	Strength requirements for specific load combination	ANSI 57.9-1984	Acceptable.
	Design Basis Normal Temperature	SAR 8.1.1.5 SAR 8.1.1.1	DSC with spent fuel rejecting 24.0 kW decay heat for 5 yr cooling time. Ambient air temperature range -40° to +125°F. Average yearly ambient temperature = 70°F	ANSI 57.9-1984	Acceptable for most of Continental US for this system. This temperature bounds most reactor sites.
	Normal Handling Loads	SAR 8.1.1.1	Hydraulic ram load: 20,000 lb.	ANSI 57.9-1984	Acceptable, site immaterial.
	Snow and Ice Loads	SAR 3.2.4	Maximum load: 110 psf	ANSI 57.9-1984	Acceptable for all of continental US.
	Live Loads	SAR 8.1.1.5	Design load: 200 psf	ANSI 57.9-1984	Acceptable for all of continental US for this system.
	Shielding	SAR 7.1.2	Average contact dose rate on HSM exterior surface <400 mrem/hr at 3 feet from HSM surface.	ANSI 57.9-1984	Acceptable.
HSM Foundation	Static Loads	SAR 3.4.3	To be designed for individual site based on site foundation analysis for static loads	10 CFR 72.212(b)(2)(ii)	Acceptable for Certificate.
Dry Shielded Canister	Dead Loads	SAR 8.1.1.2	Weight of loaded DSC: 65,000 lb. nominal, 80,000 lb. enveloping	ANSI 57.9-1984	Acceptable.
	Design Basis Internal Pressure Load	SAR 8.1.1.2	DSC internal pressure 9.6 psig	ANSI 57.9-1984	Acceptable.
	Structural Design	SAR Table 3.2-6	Service Level A and B Stress Allowables	ASME B&PV Code Sec. III, Div. 1, NB, Class I	Acceptable.

Table 2.2 Evaluation of Design Criteria for Normal Operating Conditions (Continued)

Component (1)	Design Load Type (2)	Reference (3)	Design Parameters (4)	Applicable Codes (5)	NRC Staff Comments (6)
Dry Shielded Canister (Cont'd)	Design Basis Operating Temperature Loads	SAR 8.1.1.2 SAR 10.3.15 SAR Table 8.1-2	DSC decay heat 24.0 kW for 5yr cooling time. Ambient air temperature -40°F to 125°F. Lifting inside the spent fuel pool building of loaded DSC restricted to -20°F ambient air temperature if lift height is 80 inches or less. If lift height is above 80 inches, minimum temperature is restricted to 0°F. Outside spent fuel pool building, maximum lift height is 80 inches and minimum temperature is 0°F.	ANSI 57.9-1984 ASME B&PV Code Sect. III, Div. 1, NF-2300 NUREG/CR-1815	Acceptable. Acceptable with restrictions on use. Acceptable for impact testing.
	Operational Handling	SAR 8.1.1.2	Hydraulic ram load: 20,000 lb enveloping	ANSI 57.9-1984	Acceptable.
	Criticality	SAR 3.3.4	K_{eff} less than 0.95	ANSI 57.2-1983	Acceptable.
DSC Support Assembly	Load Combinations	SAR Table 3.2-5C	Allowable factored stresses for specific load combinations.	ANSI 57.9-1984	Acceptable, site immaterial.
	Dead Loads	SAR 8.1.1.4	Loaded DSC + self weight	ANSI 57.9-1984	Acceptable, site immaterial.
	Normal Handling	SAR 8.1.1.4	DSC Reaction load with hydraulic ram load: 20,000 lbs.	ANSI 57.9-1984	Acceptable, site immaterial.
	Normal Temperature	SAR Table 3.2-5c	Factored allowable stresses for specific load combinations.	ANSI 57.9-1984	Design acceptable.
	Stress Evaluation	SAR Table 3.2-7	Stress allowables.	AISC Steel Construction Manual	Acceptable.
Transfer Cask Structure: Shell, Rings, etc.	Normal Operating Condition	SAR Table 3.2-8	Service Level A and B Stress allowables	ASME B&PV Code Sec. III, Div. 1 NC-3200	Acceptable.
	Dead Loads	SAR 8.1.1.9	a) Vertical orientation, self weight + loaded DSC + water in cavity: 200,000 lb. enveloping. b) Horizontal orientation, self weight + loaded DSC on transfer skid: 200,000 lb. enveloping.	ANSI 57.9-1984	Acceptable.
	Snow and Ice Loads	SAR 3.2.4	External surface temperature of cask will preclude buildup of snow and ice loads when in use: 0 psf	10 CFR 72.122(b)	Acceptable.

Table 2.2 Evaluation of Design Criteria for Normal Operating Conditions (Continued)

Component (1)	Design Load Type (2)	Reference (3)	Design Parameters (4)	Applicable Codes (5)	NRC Staff Comments (6)
Transfer Cask (Cont'd)	Design Basis Operating Temperature Loads Outside Spent Fuel Pool Building	SAR 8.1.1.8 8.1.2.2 SAR 10.3.15	Loaded DSC rejecting 24.0 kW decay heat with 5yr cooling time. Ambient air temperature range -40°F to 125°F with solar shield, -40°F to 100°F w/o solar shield.	ANSI 57.9-1984 ANSI N14.6	Acceptable. Note, the minimum handling temperature of the loaded DSC inside the TC is 0°F (upper trunnions are ferritic).
	Design Basis Operating Temperature Loads Inside Spent Fuel Pool Building	SAR Table 8.1-2 SAR 10.3.15	The minimum handling temperature of a loaded DSC inside a TC is -20°F, for height of 80 inches or less. For lift heights greater than 80 inches the minimum handling temperature is 0°F. Impact testing at -40°F required per SAR.	ASME B&PV Code Section III, Div. 1, NC-2300 ANSI N14.6 ¶ 4.2.6	Acceptable. The ASME B&PV Code is acceptable with the restrictions stated in design parameters (upper trunnions are ferritic). Acceptable for impact testing.
	Shielding	SAR 7.1.2	Average contact dose rate less than 100 mrem/hr.	ANSI 57.9-1984	Acceptable.
TC Upper Trunnions	Operational Handling	SAR 8.1.1.9 SAR App. C	a) Upper lifting trunnions while in Auxiliary Building: i) Stress must be less than yield stress for 6 times critical load/trunnion nominal ii) Stress must be less than ultimate stress for 10 times critical load b) Upper lifting trunnions for onsite transfer: 118,000 lb./trunnion 94,000 lb./shear 29,500 lb./trunnion axial	ANSI N14.6-1978 ASME B&PV Code Sec. III, NC Class 2	Acceptable. Acceptable.
TC Lower Trunnions	Operational Handling	SAR 8.1.1.9	Lower support trunnions weight of loaded cask during downloading and transit to HSM	ASME B&PV Code Sec. III, NC, Class 2	Acceptable.
TC Shell	Operational Handling	SAR 8.1.1.9	Hydraulic ram load due to friction of extracting loaded DSC: 20,000 lb. enveloping	ANSI 57.9-1984	Acceptable.
TC Bolts	Normal Operating	SAR Table 3.2-9	Service Levels A, B, and C Avg. stress less than 2 S_m Max. stress less than 3 S_m	ASME B&PV Code Section III, NC, Class 2, NC-3200 XIII-1180	Acceptable.

Table 2.3 Evaluation of Design Criteria for Off-Normal Operating Conditions
[Columns (1) - (5) are extracted from SAR Tables 3.2-1 and 3.2-5]

Component (1)	Design Load Type (2)	Reference (3)	Design Parameters (4)	Applicable Codes (5)	NRC Staff Comments (6)
HSM	Off-Normal Temperature	SAR 8.1.1.5 SAR 8.1.1.1	-40°F to +125°F ambient temperature 70°F average yearly ambient	ANSI 57.9-1984	Acceptable for most of Continental US for this system.
	Off-Normal (Jammed Condition) Handling	SAR 8.1.1.4	Hydraulic ram load of 80,000 lb.	ANSI 57.9-1984	Acceptable, site immaterial.
	Load Combination	SAR Table 3.2-5	Strength requirements for specific Load Combinations	ANSI 57.9-1984	Acceptable, site immaterial.
Dry Shielded Canister	Off-Normal Temperature	SAR 8.1.1.2 SAR 8.1.2.2 SAR 10.3.15 SAR Table 8.1-2	-40°F to 125°F ambient temperature Lifting of loaded DSC restricted to -20°F or more ambient air temperature for lifts of less than 80 inches. Outside spent fuel pool building maximum lift height is 80 inches, and minimum temperature is 0°F.	ANSI 57.9-1984 ASME B&PV Code, Sec. III, NF-2300 NUREG/CR-1815	Acceptable for storage. Acceptable for transport. Acceptable for impact testing.
	Off-Normal Pressure	SAR 8.1.1.1 SAR 8.1.1.2	DSC internal pressure less than 9.6 psig	ANSI 57.9-1984	Acceptable.
	Jammed Condition Handling	SAR 8.1.2.1	Hydraulic ram load equal to 80,000 lb. nominal	ANSI 57.9-1984	Acceptable.
	Structural Design Off-Normal Conditions	SAR Table 3.2-6	Service Level C Stress Allowables	ASME B&PV Code Sec. III, Div. 1, NB Class 1	Acceptable.
DSC Support Assembly	Jammed Handling Condition	SAR 8.1.1.4	Hydraulic ram load: 80,000 lb. nominal	ANSI 57.9-1984	Acceptable, site immaterial. However, used in load combination as though an "accident" load. Not acceptable application of criteria.
	Off-Normal Temperatures	SAR Table 3.2-5c	Factored allowable stresses for specific load combinations.	ANSI 57.9-1984	Actual design acceptable.
	Load Combination	SAR Table 3.2-5C	Factored allowable stresses for specific load combination	ANSI 57.9-1984	Acceptable, site immaterial.

Table 2.3 Evaluation of Design Criteria for Off-Normal Operating Conditions (Continued)

Component (1)	Design Load Type (2)	Reference (3)	Design Parameters (4)	Applicable Codes (5)	NRC Staff Comments (6)
Transfer Cask	Off-Normal Temperature	SAR 8.1.1.1	100°F ambient temperature w/o solar shield, 125°F with solar shield	ANSI 57.9-1984	Acceptable.
	Brittle fracture of ferritic steel trunnions	SAR 8.1-2	Lower temperature limit is -40°F for use inside spent fuel pool building for any lift without loaded DSC. Lower temperature limit for loaded DSC is -20°F for lifts less than 80 inches.	ASME B&PV Code, Sec. III, NC-2300 ASME B&PV Code, Sec. III, NF-2300 ANSI N14.6 ¶ 4.2.6	Acceptable. Acceptable for impact testing.
	Jammed Condition Handling	SAR 8.1.2.1	Hydraulic ram load: 80,000 lb. nominal	ANSI 57.9-1984	Acceptable.
	Structural Design Off-Normal Conditions	SAR Table 3.2-8	Service Level C Stress Allowables	ASME B&PV Code Sec. III, Div. 1, NC, Class 2	Acceptable.
	Bolts, Off-Normal Conditions	SAR Table 3.2-9	Service Level C Avg. stress less than 2 S_m Max. stress less than 3 S_m	ASME B&PV Code Sec. III, Div. 1, NC, Class 2 NC-3200	Acceptable.

Table 2.4 Evaluation of Design Criteria for Accident Conditions
[Columns (1) - (5) are from SAR Table 3.6-3 and Paragraph 8.2.6]

Component (1)	Design Load Type (2)	Reference (3)	Design Parameters (4)	Applicable Codes (5)	NRC Staff Comments (6)
HSM	Design Basis Tornado	SAR 3.2.1	Max. velocity 360 mph Max. wind pressure 397 psf	Regulatory Guide 1.76 ANSI A58.1-1982	Acceptable for US.
	Load Combination	SAR Table 3.2-5	Strength requirements for specific load combinations	ANSI 57.9-1984	Acceptable, site immaterial.
	Design Basis Tornado Missiles	SAR 3.2.1	Max. velocity 126 mph Types: Automobile 3,967 lb. 8 in. diam shell, 276 lb. 1 in. solid sphere	NUREG-0800 Sec. 3.5.1.4	Acceptable for US. Does not include all NUREG-0800 missiles but those used are the most critical for the HSM.
	Flood	SAR 3.2.2	Maximum water height: 50 feet Maximum velocity: 15 fps	10 CFR 72.122(b)	Acceptable for Certification. Verification that design criteria bound site parameters.
	Seismic	SAR 3.2.3	Horizontal ground acceleration 0.25g (both directions) Vertical ground acceleration 0.17g	NRC Regulatory Guides 1.60 and 1.61	Acceptable for Certification. Verification that design criteria bound site parameters.
	Accident Condition Temperatures	SAR 8.2.7.2	DSC with spent fuel rejecting 24.0 kW of decay heat for 5yr cooling time. Ambient air temperature range of -40°F to +125°F with HSM vents blocked for 5 days or less.	ANSI 57.9-1984	Low temperature acceptable for continental US. Verification of maximum temperature for individual sites. Blockage criteria acceptable with appropriate daily surveillance.
	Fire and Explosions	SAR 3.3.6	"Enveloped by other design events," e.g. - design basis tornado - design basis tornado and missiles	10 CFR 72.122(c)	Analysis of potential fires and explosions from any credible sources required for each site. Verification that assertion (Column (4)) bound site parameters.

Table 2.4 Evaluation of Design Criteria for Accident Conditions (Continued)

Component (1)	Design Load Type (2)	Reference (3)	Design Parameters (4)	Applicable Codes (5)	NRC Staff Comments (6)
HSM (Continued)	Lightning	SAR 8.2.6	"Lightning protection system requirements are site specific..."		Acceptable for Certificate. NFPA 78, Lightning Protection Code is to be used for evaluation of need and design of lightning protection at site.
HSM Foundation	Static load	SAR 3.4.3	To be designed for individual site based on site foundation analysis for static loads.	10 CFR 72.212(b)(2)(ii)	Acceptable for Certificate. Nominal SAR design or alternative design should be verified for individual site.
DSC	Accident Drop	SAR 8.2.5	Equivalent static deceleration: 75g vertical end drop 75g horizontal side drop 25g corner drop with slap down (corresponds to an 80 inch drop height) Structural damping during drop: 10%	10 CFR 72.122(b) Reg. Guide 1.61	Acceptable. Administrative controls must be imposed to prevent lifting or transporting the loaded DSC outside the spent fuel pool building higher than 80 inches. 10% damping value exceeds R.G. 1.61 guidance. A 7% value has been evaluated by the staff and has been accepted.
	Flood	SAR 3.2.2	Maximum water height: 50 feet	10 CFR 72.122(b)	Acceptable for Certification. Verification required for individual sites.
	Seismic	SAR 3.2.2 SAR 8.2.3.2	Horizontal ground acceleration 0.25g Vertical ground acceleration 0.17g Horizontal acceleration: 1.5g Vertical acceleration: 1.0g 3% critical damping	NRC Regulatory Guides 1.60 and 1.61	Acceptable.
	Accident Internal Pressure (HSM vents blocked for 5 days)	SAR 8.2.7.2 Table 8.1-4a	DSC internal pressure: 50.3 psig based on 100% fuel clad rupture and fill gas release, and ambient air temp. = 125°F DSC shell temperature: 587°F	10 CFR 72.122(b)	Acceptable.
	Accident Conditions	SAR Table 3.2-6	Service Level D Stress allowables	ASME B&PV Code Sec. III, Div. 1 NB, Class I	Acceptable.
	Fire and Explosions	SAR 3.3.6	"bound by" other events, e.g. - design basis tornado - design basis tornado with missiles - postulated drop - external pressure due to 50 feet head of water	10 CFR 72.122(c)	Verification that assertion (column (4)) bound site parameters for both fire and explosions.

Table 2.4 Evaluation of Design Criteria for Accident Conditions (Continued)

Component (1)	Design Load Type (2)	Reference (3)	Design Parameters (4)	Applicable Codes (5)	NRC Staff Comments (6)
DSC Support Assembly	Seismic	SAR 3.2.3	DSC reaction loads with Horizontal ground acceleration: 0.25g Vertical ground acceleration: 0.17g	NRC Reg. Guides 1.60 and 1.61	Acceptable for Certification. Verification of criteria.
	Jammed Condition (Treated as a drop of heavy load accident in load combination)	SAR Table 8.2-12	Hydraulic ram load of 80,000 lbs.	ANSI 57.9-1984	Off-normal loads should be treated as live loads (or other non-accident category) in "normal" load combinations. Design is acceptable.
	Load Combination	SAR Table 3.2-5c	Factored allowable stresses for specific load combinations.	ANSI 57.9-1984	Acceptable, site immaterial.
Transfer Cask	Design Basis Tornado	SAR 3.2.1	Max. wind velocity: 360 mph Max. wind pressure: 397 psf	NRC Reg. Guide 1.76, ANSI 58.1-1982	Acceptable.
	Design Basis Tornado Missiles	SAR 3.2.1	Automobile, 3967 lb. 8 in. diameter shell, 276 lb.	NUREG-0800 Sec. 3.5.1.4	Acceptable. Missiles selected bound effects of other missiles in NUREG.
	Flood	SAR 3.2.2	Flood not included in design basis. Cask use to be restricted by administrative controls.	10 CFR 72.122	Acceptable for Certification. Appropriate administrative controls must be in place at any site where flooding is a possibility.
	Seismic	SAR 3.2.3	Horizontal ground acceleration 0.25g (both directions) Vertical ground acceleration 0.17g, 3% critical damping	NRC Reg. Guides 1.60 and 1.61	Acceptable for Certification. Verification of criteria required for individual sites.
	Accident Drop	SAR 8.2.5	Equivalent static deceleration: 75g vertical end drop 75g horizontal side drop 25g corner drop with slapdown (corresponds to an 80 inch drop height) Structural damping during drop 10%	10 CFR 72.122(b)	Acceptable. Administrative controls must be imposed to prevent lifting or transporting TC with loaded DSC outside of the spent fuel building higher than 80 inches. 10% damping exceeds R.G. 1.61 guidance, however, 7% has been evaluated by staff and accepted.
	Bolts, Accident Drop	SAR Table 3.2-9	Service Level D Stress allowables	ASME B&PV Code Sec. III, Div. 1 NC, Class 2, NC-3200	Acceptable.

Table 2.4 Evaluation of Design Criteria for Accident Conditions (Continued)

Component (1)	Design Load Type (2)	Reference (3)	Design Parameters (4)	Applicable Codes (5)	NRC Staff Comments (6)
Transfer Cask (Continued)	Structural Design, Accident	SAR Table 3.2-8	Service Level D	ASME B&PV Code Sec. III, Div. 1 NC, Class 2 NC-3200	Acceptable.
	Internal Pressure	SAR Table 3.2-1	Not applicable because DSC provides pressure boundary.	10 CFR 72.122(b)	Acceptable.
	Lightning	Not Addressed	[NRC Staff: Should not permit damage to DSC or affect DSC retrievability]		Acceptable, based on separate staff analysis of hazard while on transit.
	Fire and Explosions	SAR 3.3.6	"Enveloped by other design basis events," e.g. - design basis tornado generated missile loads	10 CFR 72.122(c)	Verification that assertion (column (4)) bound site parameters for both fire and explosions.

Table 2.5 Load Combinations Used for HSM Reinforced Concrete

Load Comb.	Load Combination Description	Correlation to Standards	NRC Staff Comments
1,2	1.4 D + 1.7 L	ANSI 57.9, Paragraph 6.17.3.1(a)	Acceptable.
3,4	0.75 (1.4 D + 1.7L + 1.7 H + 1.7 T + 1.7 W)	ANSI 57.9, Paragraph 6.17.3.1(c)	[Note: Uses W_t for W] Acceptable. Conservative relative to ACI 349, Paragraph 9.2.1(5) which is also acceptable.
5	D + L + H + T + E	ANSI 57.9, Paragraph 6.17.3.1(e)	Acceptable.
6	D + L + H + T + F	ANSI 57.9, Paragraph 6.17.3.1(f)	Acceptable.
7	D + L + H + T_a	ANSI 57.9, Paragraph 6.17.3.1(g)	Acceptable.
WHERE:			
D =	Dead Weight *1.05	ANSI 57.9, Paragraph 6.17.1.1	Acceptable.
L =	Live Load (varied between 0-100% for worst case)	ANSI 57.9, Paragraph 6.17.1.1	Acceptable.
H =	Lateral Soil Pressure Loads (H taken as = 0)	ANSI 57.9, Paragraph 6.17.1.1	Acceptable.
W =	Tornado Wind Loads	NRC Reg. Guide 1.76 and ANSI A58.1	Acceptable.
T =	Normal Condition Thermal Load	ANSI 57.9, Paragraph 6.17.1.1	Acceptable.
T_a =	Off-Normal or Accident Thermal Loads	ANSI 57.9, Paragraph 6.17.1.3	Acceptable.
E =	Earthquake Load	ANSI 57.9, Paragraph 6.17.1.2	Acceptable.
F =	Flood Load	ANSI 57.9, Paragraph 6.17.1.3	Acceptable.
A =	Accident (e.g., drop accident)	None	

Table 2.5 Load Combinations Used for HSM Reinforced Concrete (Continued)

Load Combination Description	Correlation to Standards	NRC Staff Comments
<u>Omitted Load Combinations of ANSI 57.9</u>		
1.4 D + 1.7 L + 1.7 H (L.C. #2)	ANSI 57.9, Paragraph 6.17.3.1(b)	Omission acceptable [with H=O same as L.C. #1].
0.75(1.4 D + 1.7 L + 1.7 H + 1.7 T) (L.C #4)	ANSI 57.9, Paragraph 6.17.3.1(d)	Omission acceptable [with H=O encompassed by L.C. #3]
D + L + H + T + A DSC Support Structure (Structural Steel), See Table 2-6	ANSI 57.9, Paragraph 6.17.3.1(f)	Omission would not be acceptable except that tornado missile loadings are acceptably analyzed, and that potential consequences of accidental drop of HSM access door is not considered a nuclear safety situation.

Table 2.6 Load Combinations Used for DSC Support Assembly

Load Combination Description	Correlation to Standards	NRC Staff Comments
Equation 1 S > DL + HLf	ANSI 57.9, Paragraph 6.17.3.2.1(a)	Acceptable.
Equation 2 1.5S > DL + HLf + T	ANSI 57.9, Paragraph 6.17.3.2.1(d)	Acceptable.
Equation 3 1.6S > DL + HLf + T + E	ANSI 57.9, Paragraph 6.17.3.2.1(e)	Acceptable. [H = O]
Equation 4 1.7S > DL + Ta	ANSI 57.9, Paragraph 6.17.3.2.1(g)	Acceptable. [H, L = O]
Equation 5 1.7S > HLj	ANSI 57.9, Paragraph 6.17.3.2.1(f)	Acceptable. [L, H, T = O, and dead load of support assembly is negligible]

Where:

DL = Dead Load Support Assembly including DSC weight
HLf = Normal Handling (transfer) Loads due to friction
T = Normal Thermal Load
E = Seismic Load
Ta = Accident Thermal Load
HLj = Off-Normal Handling Loads due to a jammed DC including weight of DSC (accident condition)
H = Lateral Earth Pressure = O
W = Wind or tornado missiles = O (Support assembly is shielded by HSM)
L = Live load not applicable when HSM is closed

Omitted Load Combinations of ANSI 57.9		
S > D + L + H	ANSI 57.9, Paragraph 6.17.3.2.1(b)	Omission acceptable [H = O]
1.33S > D + L + H + W	ANSI 57.9, Paragraph 6.17.3.2.1(c)	Omission acceptable [H, W = O]

3.0 STRUCTURAL EVALUATION

Introduction

This section evaluates the structural designs of the HSM, DSC, and TC. The designs are evaluated against design criteria as presented in the SAR, or otherwise determined to be acceptable (discussed in Section 2.1). Although 10 CFR Part 72 is the basis for review, it does not specify the criteria that must be used. The staff summary and conclusions are therefore presented in terms of: (1) criteria suitability and any restricting conditions that might apply, and (2) whether or not the standardized NUHOMS system design satisfies the criteria and any restricting conditions.

The structural and mechanical systems of the standardized NUHOMS system important to safety are the TC, the DSC, and the HSM including the DSC Support Assembly. Loading conditions for the individual components in the system result from all phases of normal operating conditions, exposure to natural phenomena, and accident conditions. The NRC staff evaluated all analyses for all components submitted in or with the SAR (See Reference 1). All calculations were reviewed by the NRC staff. The review included spot checks, parallel calculations, and validations of sources or expressions used. Assumed loads, material properties, and ASME, ACI, AISC, or ANSI code allowable stress limits were checked.

Applicable Parts of 10 CFR Part 72

The SAR was submitted as part of the application for a Certificate of Compliance under 10 CFR Part 72, Subpart L. Applicable design requirements are therefore stated in 10 CFR 72.236. This SER evaluation also used 10 CFR Part 72, Subpart F, for review of design bases and criteria. The guidance of Regulatory Guide 3.48 has been used for review of the comprehensiveness of the material presented in the SAR and supplementing and modifying docketed documentation.

The review was performed in stages. The stages addressed: the sources of requirements and the criteria stated as constituting the basis for the design (SER Section 2.0), the structural evaluation of the actual design against the stated and other appropriate criteria (Section 3.0), and other evaluations (Sections 3 through 13).

Materials

The materials used for fabrication of HSM (and DSC Support Assembly), DSC, and TC are identified in the corresponding fabrication specifications and/or drawings submitted in supplement to the SAR. The mechanical properties of the materials used for the design and the sources of those properties are shown in SAR Table 8.1-2.

The sources identified in SAR Table 8.1-2 for properties of steel are the ASME Boiler and Pressure Vessel Code, Section III-1 (Reference 9), Appendices, Code Case N-171-14 ASTM, and Handbook of Concrete Engineering by Fintel (Reference 12). The ASME Code is an acceptable standard and is in compliance with the quality standards in 10 CFR Part 72, Subpart F. The source identified in SAR Table 8.1-2 for the mechanical properties of concrete and reinforcing steel is the Handbook of Concrete Engineering (Reference 12), a document that is not considered to meet the quality standards of 10 CFR 72.122. However, the staff has compared the data in Table 8.1-2 with ASTM specifications for steel and the pertinent American Concrete Institute specifications for concrete which do meet Subpart F standards. The staff concurs with the data in SAR Table 8.1-2.

The source identified in SAR Table 8.1-2 for the structural properties of lead (Reference 13) is not considered a recognized standard that is consistent with the quality standards of 10 CFR 72.122(a). However, the material strength properties for lead were used conservatively. The staff concludes that the way the data were used meets the intent of the quality standards of 10 CFR 72.122(a) for material properties.

The supplemental material provided with the SAR includes supporting design calculation packages, construction drawings, and fabrication specifications. The SER review is based on supporting design calculation packages, and summary data included in Chapters 4 and 8 of the SAR. The construction drawings and fabrication specifications were used to verify that there is a one-to-one correspondence of dimensional and material property data between the drawings and the calculation packages.

10 CFR 72.3 defines structures, systems, and components important to safety which have features that: "(1) maintain the conditions required to store spent fuel or high-level radioactive waste, (2) prevent damage to the spent fuel or the high-level radioactive waste container during handling and storage, or (3) provide reasonable assurance that spent fuel or high-level radioactive waste can be received, handled, packaged, stored, and retrieved without undue risk to the health and safety of the public."

The HSM is considered as important to safety because it provides radiation shielding and protects DSCs from damage (features 1 and 2). The DSC is important to safety since it forms the secondary confinement boundary and prevents and controls criticality (feature 1). The TC is important to safety since it provides radiation shielding during transport and prevents radioactive releases (features 1, 2, and 3). The DSC and TC are also "safety related" equipment in conjunction with their use in fuel pool facilities, per 10 CFR Part 50.

Evaluation of Ferritic Steels Against Brittle Fracture

The standardized NUHOMS system uses ferritic steels in portions of the DSC and the TC. Because ferritic steels are subject to brittle fracture at low temperatures when movement of the component may involve an impact, the use at low temperature must be evaluated. The two components are subject to slightly different criteria due to the following reasons.

Brittle Fracture Considerations for the DSC

In the case of the DSC, the brittle fracture question has two aspects. The first aspect concerns maintenance of the confinement boundary during an impact (drop accident) at low operating temperature. Because the DSC confinement boundary is manufactured entirely of SA 240 Type 304 steel, brittle fracture is not an issue. However, because the basket materials are manufactured entirely of ferritic steels, the concern is maintenance of favorable basket geometry required to ensure subcriticality. The NRC staff considers this factor to be equally important to maintenance of confinement. Hence, the staff accepts NUREG/CR-1815 (Reference 7) as appropriate for brittle fracture test methods for the DSC.

As described in the SAR, the basket components are designed according to the ASME B&PV Code, Section III, Subsection NF for component supports. The basket materials shall, according to the SAR, be impact tested in accordance with the requirements of NF-2300 at -28.9°C (-20°F). However, the NRC staff notes that this requirement is not equivalent to NUREG/CR-1815, and therefore the staff imposes limiting conditions of operation on the use of the DSC as follows.

1. No lifts or handling of the DSC at any height are permissible at basket temperatures below -28.9°C (-20°F) inside the spent fuel pool building.

2. The maximum lift height of the DSC shall be 203 cm (80 inches) if the basket temperature is below -17.8°C (0°F) but higher than -28.9°C (-20°F) inside the spent fuel pool building.

3. No lift height restriction is imposed if the basket temperature is higher than -17.8°C (0°F) inside the spent fuel pool building.

4. The maximum lift height and handling height for all transfer operations outside the spent fuel pool building shall be 203 cm (80 inches) <u>and</u> the basket temperature may not be lower than -17.8°C (0°F).

Brittle Fracture Considerations for the TC

In the case of the TC, which serves only as a lifting and transfer device, and not as a confinement structure, the brittle fracture question only deals with the possibility of dropping the TC/DSC, and consequences of the DSC or DSC basket brittle fracture. The staff accepts ANSI N14.6 and NUREG-0612 (References 8 and 14) as appropriate for brittle fracture test methods for the TC.

As described in the SAR, for all operations except lifting, the TC is designed and tested in accordance with the ASME B&PV Code, Section III, Subsection NC for Class 2 Components. For critical lifts, ANSI N14.6 has been used. However, paragraph 4.2.6 in

ANSI N14.6, which specifies impact testing, was not used by PNFS for the trunnions or the shell, which are ferritic steel. The SAR specifies that impact testing of ferritic steels is required in accordance with ASME requirements of Table NC-2332.1-1, and that tests shall be made at -40°C (-40°F). The guidance in ANSI N14.6 for impact testing ferritic steels is more conservative than the ASME code, i.e., the nil ductility transition temperature (NDT) shall be 4.4°C (40°F) lower than the lowest service temperature. The impact test procedure used by PNFS will, in fact, never determine the NDT. Therefore, in order to maintain the 4.4°C (40°F) margin, use of the loaded TC will be limited to a minimum temperature of -17.8°C (0°F) outside the spent fuel pool building.

In previous NRC SERs, on-site ferritic transfer casks have had limiting conditions of operation with regard to lift height and temperature (References 15 and 16). The staff imposes limiting conditions of operation on the use of the TC/DSC as follows.

1. No lifts or handling of the TC/DSC at any height are permissible at DSC basket temperatures below -28.9°C (-20°F) inside the spent fuel pool building. (The DSC basket is limiting.)

2. The maximum lift height of the TC/DSC shall be 203 cm (80 inches) if the basket temperature is below -17.8°C (0°F) but higher than -28.9°C (-20°F) inside the spent fuel pool building. (The DSC basket is limiting.)

3. No lift height restriction is imposed on the TC/DSC if the basket temperature is higher than -17.8°C (0°F) inside the spent fuel pool building.

4. The maximum lift height and handling height for all transfer operations outside the spent fuel pool building shall be 203 cm (80 inches) <u>and</u> the basket temperature may not be lower than -17.8°C (0°F).

It should be noted that the DSC is designed to maintain the confinement boundary for drop heights of 203 cm (80 inches) or less. Thus, even if the TC trunnion were to fail due to brittle fracture, the DSC would not release any radioactive material. The only situation which might involve lift heights above 203 cm (80 inches) would be inside the spent fuel pool building, where the -17.8°C (0°F) minimum temperature shall apply and handling of the DSC is controlled by 10 CFR Part 50 requirements.

<u>Discussion of Concrete Constituents and Temperature Suitability</u>

The SAR indicates that HSM concrete temperatures might exceed ACI 349 (Reference 17) limits, i.e., the 65.6°C (150°F) limit for bulk concrete, the 93.3°C (200°F) limit for local areas for normal operation or any long term period, and 177°C (350°F) for accident or other short term period. The above limits are imposed by ACI 349 for concrete in the absence of tests to evaluate the reduction in strength and to show that the concrete will not deteriorate with or without load (ACI 349, Section A.4).

The NRC staff accepts the ACI 349 criteria and, based on separate research and analysis, also accepts the following as alternative criteria in lieu of the ACI 349 temperature requirements for ISFSIs only:

1. If concrete temperatures of general or local areas do not exceed 93.3°C (200°F) in normal or off-normal conditions/occurrences, no tests or reduction of concrete strength are required.

2. If concrete temperatures of general or local areas exceed 93.3°C (200°F) but would not exceed 149°C (300°F), no tests or reduction of concrete strength are required if Type II cement is used and aggregates are selected which are acceptable for concrete in this temperature range. The staff has accepted the following criteria for aggregates (fine and coarse) which are considered suitable:

   a. Satisfy ASTM C33 requirements and other requirements as referenced in ACI 349 for aggregates.

   b. Have demonstrated a coefficient of thermal expansion (tangent in temperature range of 21°C to 37.8°C (70°F to 100°F)) no greater than $1x10^{-5}$cm/cm°C ($6x10^{-6}$ in/in/°F) or be one of the following minerals: limestone, dolomite, marble, basalt, granite, gabbro or rhyolite.

The above criteria in lieu of the ACI 349 requirements (for ISFSI only) do not extend above 149°C (300°F) for normal or off-normal temperatures for general or local areas and do not modify the ACI requirements for accident situations. For an ISFSI, use of any Portland cement concrete, where normal or off-normal temperatures of general or local areas may exceed 149°C (300°F), or where "accident" temperatures may exceed 177°C (350°F), require tests on the exact concrete mix (cement type, additives, water-cement ratio, aggregates, proportions) which is to be used. The tests are to acceptably demonstrate the level of strength reduction which needs to be applied, and to show that the increased temperatures do not cause deterioration of the concrete either with or without load.

The NRC staff considered an exception to the second criteria above for the requirements for fine aggregates only. It should be noted that the HSM roof temperature is calculated to be 121°C (250°F) on a 52°C (125°F) ambient day, for off-normal conditions, and therefore does not qualify for the following exception. This exception should not be construed as general acceptance for ISFSI usage for any normal temperatures exceeding 93.3°C (200°F) or any off-normal temperatures exceeding 107°C (225°F).

1. Fine aggregates composed of quartz sand, sandstone sands, or any sands of the following minerals: limestone, dolomite, marble, basalt, granite, or rhyolite; or any mixture of these may be used without further documentation as to the coefficient of thermal expansion.

2. Fine aggregates must satisfy requirements of ASTM C33 and ACI 349, and of the documents incorporated in those by reference.

Design Descriptions

A description of the standardized NUHOMS system is included in Section 1 of this SER. More detailed descriptions are given in this section, where appropriate, to provide the context of the evaluation. The formal description is given by the SAR and subsequent docketed documentation provided (Reference 1). The SER is based on the formal description in the SAR and not on the descriptions as summarized or extracted in the SER.

3.1 Horizontal Storage Module

3.1.1 Design Description of HSM

A general description of the HSM is included at Section 1.5.1 of this SER. Each HSM is essentially a monolithic reinforced concrete structure with a separate, bolted-on roof slab. The wall and roof thicknesses are dictated by radiation shielding considerations. The reinforcing steel must satisfy requirements for minimum steel as well as the strength requirements for all load combinations. Embedments must provide for attachment of the roof slab, DSC support assembly, door, TC, shield walls, and screens covering gaps between HSMs and between HSMs and shield walls.

The front wall of the HSM contains a round port for DSC access which is closed by a round, shielded steel and concrete door welded in place when the DSC is in place. The roof and the front wall of the individual HSM are of sufficient strength to resist tornado missiles. The HSM is unique in the way in which the modules can be configured. They may be located singly, in single rows, or in back-to-back configurations. Shielding requirements for adjacent modules are provided by the adjacent module itself. For the end modules, the 0.46 m (1 ft.-6 in.) wall thickness is not sufficient to provide the required shielding alone, and an additional 0.60 m (2 ft.) thick end module shield wall is attached to the side of the HSM. If the modules are located in a back-to-back configuration, the rear walls are protected by the abutting HSM. If the modules are located singly or in single rows, the 0.3 m (1 ft.) thick rear wall is not sufficient to provide the required shielding, and an additional 0.46 m (1 ft.-6 in.) thick rear shield wall is attached to the rear of the HSM. As the passive air cooling uses vents at the sides of the base unit at floor and roof levels, a 15 cm (6-in.) gap is left between adjacent HSMs and end shield walls.

The shield walls have been designed to the same standards as the HSM and have been analyzed for the loadings of dead weight, live load, thermal loads, and accident loads of tornado winds/missiles, earthquakes, and floods. The resulting stresses for the end module shield wall are summarized in Table 3.1.2-1 and shown to be acceptable. Significant effects resulting from the tornado missile load are discussed in Section 3.1.2.2.A. The rear shield walls, which abut the HSM, were analyzed and shown in Table 3.1.2-1 to have lower

stresses than the end module shield walls. The tornado missile load was calculated to be within the allowable limits even while using very conservative analytical assumptions.

Located within and attached to the concrete structure, the DSC support structure is a welded steel assembly which supports and restrains the DSC. It is designed to satisfy the structural loads of dead weight, seismic forces, thermally induced loads, and handling loads.

3.1.2 Design Evaluation

The SAR was reviewed in conjunction with the calculation package NUH 004.0200 (Reference 18). The computer runs which were made to simulate the load conditions for the controlling PWR or BWR DSC design were also included in the review.

3.1.2.1 Normal and Off-Normal Operations

A. Dead Weight and Live Load Analysis

Tables 8.1-3a and 8.1-3b of the SAR provide the dead weights of both 24 PWR Spent Fuel Assemblies and 52 BWR Spent Fuel Assemblies respectively. The vendor has chosen to use a design weight of approximately 36,290 kg (80,000 lbs.), somewhat higher than the total dry DSC loaded weight of the heaviest assembly, for the analyses of the HSM and DSC support assemblies. Because the weight of the DSC is known, the vendor has chosen to treat it as a dead load. The weight of the concrete HSM is included as dead load. The weight of the steel DSC support structure is trivial. The vendor has also chosen to increase the dead load by five percent for all load combinations. The dead and live loads were applied to the finite element model depicted in SAR Figure 8.1-10a.

B. Concrete Creep and Shrinkage Analysis

The vendor has chosen to neglect concrete creep and shrinkage effects based on the summary analysis that thermal expansive forces would mitigate rather than aggravate the creep and shrinkage forces. This is acceptable for the HSM design as a conservative simplification. The HSM design satisfies minimum steel requirements of ACI 349-85 (Reference 17), which are partly based on creep and shrinkage considerations and which are more restrictive than the requirements for shrinkage and temperature reinforcement of ACI-318 (Reference 19).

C. Thermal Loads

The results of thermal analyses performed by the vendor are given in SAR Table 8.1-9b and in Figure 8.1-3a. They are derived from calculations documented in NUH004.0416 (Reference 20). For the normal operations case the thermal gradients, calculated with a long time ambient air temperature of 37.8°C (100°F), were applied to the finite element model depicted in the figure on NUH 004.0200, Rev. 5, page 10b. The thermal loads are the greatest inputs to the normal load combinations and result in the lowest margin of safety for

both the concrete HSM and the steel DSC support structure. In accordance with ACI 349-85 Appendix A (Reference 17), the ratio of cracked section modulus to gross section modulus is applied to the stresses obtained from the thermal analyses. The NRC staff accepts this approach.

D. Radiation Effects on HSM Concrete

The vendor calculated the neutron and gamma energy flux deposited in the concrete and determined these levels to have negligible effect on the concrete properties. The NRC staff accepts this determination.

E. HSM Design Analysis

The vendor analyzed the HSM with its DSC support structure using the ANSYS finite element analysis computer program (Reference 21) and documented the results in reference 18 [NUH004.0200]. The staff reviewed these computations included in the original SAR and in supplemental and modifying docketed material submitted subsequently and considered as part of the SAR. The final design analysis calculations were determined to be acceptable. The analysis resulted in no load cases where the margin of safety for any structural component was less than 0.1. Margin of safety is defined as the allowable load divided by the calculated load minus 1.

3.1.2.2 Accident Analysis

A. Tornado Winds/Tornado Missiles

Tornado forces used in the SAR treat the tornado forces as normal or off-normal wind loads. This is considered very conservative. ANSI 57.9 (Reference 22) does not identify tornado loads. Such loads may be considered as "accident" loads and are so treated in ACI-349 (Reference 17) load combination expressions. The vendor chose to use the most severe tornado wind loadings specified by NUREG-0800 and NRC Regulatory Guide 1.76 (References 23 and 24) as the design basis for the standardized NUHOMS design. An analysis was also performed to determine whether the HSM would overturn or slide due to the tornado wind.

To demonstrate the adequacy of the HSM design for tornado missiles, a bounding analysis of the end and rear modules in an array was performed. The end module shield walls were evaluated for the direct impact of a 1,799 kg (3,967 lb.) automobile having a 1.86 m^2 (20 sq. ft.) frontal area and traveling at 56.3 m/sec (184.8 ft./sec). Upon impact, the three spacer plates at the top of the shield wall collapse, and the shield wall is expected to form a yield line along the length of the shield wall at mid-height. No damage will occur to the HSM; however, the damaged end module shield wall will require replacement. The rear shield walls which abut the HSM were also evaluated for the same impact load; no damage is expected. Both end and rear walls have been designed to meet the impulsive and impactive

requirements of ACI 349-85. The HSM was shown to meet the minimum acceptable barrier thickness requirements for local damage against tornado generated missiles as specified in NUREG-0800.

B. Earthquake

The standardized NUHOMS HSM was analyzed for a peak horizontal ground acceleration of 0.25 g and a vertical acceleration of 0.17 g in accordance with NRC Regulatory Guide 1.60 (Reference 25) and a 7% damping coefficient in accordance with NRC Regulatory Guide 1.61 (Reference 26). These ground accelerations are in agreement with 10 CFR 72.102(a)(2) for sites which are underlaid by rock east of the Rocky Mountain Front except in areas of known seismic activity. Frequency analyses and response spectrum analyses were performed. The modal responses were combined in accordance with Regulatory Guide 1.92 (Reference 27) and the directional responses were then combined by the square root of the sum of the squares method. The vendor determined that the HSM would neither slide nor overturn due to the seismic input. The NRC finds this approach acceptable and concurs with the findings.

C. Flood

The HSM was analyzed for a 15.2 m (50 ft.) static head of water and a maximum flow velocity of 4.6 m (15 ft/sec). For this condition the vendor showed that the maximum flood induced moment is considerably less than the ultimate moment capacity of the HSM. Further calculations showed that the HSM would neither slide nor overturn under the design load condition specified. Based on the docketed material, the NRC staff finds the results acceptable.

D. Lightning

Lightning protection system requirements are site specific and depend upon the frequency of occurrences of lightning storms in the proposed location and the degree of protection offered by other grounded structures in the vicinity. NFPA 78 Lightning Protection Code (Reference 28) is to be used for evaluation of need and design of lightning protection at the site.

E. Blockage of Air Inlet and Outlet Openings

The vendor defined the design basis accident thermal event as one in which the inlet and outlet vents are blocked for 5 days with an extreme ambient temperature of 52°C (125°F) and maximum solar heat load. The HSM was analyzed for this condition referred to in NUH004.0200 as Accident Thermal (T_a). The results of thermal analyses performed by the vendor are given in SAR Table 8.1-9b. They are derived from calculations documented in NUH004.0418 and NUH004.0419 (References 29 and 30). For the accident case the thermal gradients were applied to the finite element model depicted in NUH004.0200, Rev. 5,

page 10b. The thermal loads are the greatest inputs to the accident load combination and result in the lowest margin of safety for both the concrete HSM and the steel DSC support structure. In accordance with ACI 349-85 Appendix A, the ratio of cracked section modulus to gross section modulus is applied to the stresses obtained from the thermal analyses. The NRC staff accepts this approach.

F. Load Combinations

The HSM is designed and evaluated for satisfaction of load combination criteria, as identified in Table 2.5, derived from SAR Table 3.2-5. These load combinations are as stated in Regulatory Guide 3.60 (Reference 31) and ANSI 57.9 (Reference 22, paragraph 6.17.3.1) which are incorporated into the Regulatory Guide by reference. The load combinations incorporating tornado forces used in the SAR treat the tornado forces as normal or off-normal wind loads. This is considered very conservative.

Load combinations identified in the SAR for the DSC support structure are shown in Table 2.6, derived from SAR Tables 3.2-5c and 8.2-11. These load combinations are acceptable with the exception that the off-normal jammed DSC handling load was treated as an "accident" load rather than in an expression for normal (and off-normal) loads. The actual design was checked by the staff by separate calculation. It was determined that if the loads were used in the acceptable expression, the factor of safety would still be acceptable. Therefore the design is considered acceptable despite inappropriate use of the load combination.

3.1.3 Discussion and Conclusions

The maximum loads on the five major concrete structural components of the HSM (floor slab; side, front, and rear walls; and roof slab) are listed in SAR Tables 8.1-10 and 8.2-3 and in supplemental and modifying docketed material. These data were checked by the staff and found to be acceptable.

Allowable loads for bending and shear are included in Table 3.1.2-1. These are derived from the structural design and analysis package, NUH004.0200 (Reference 18), which is part of the docketed material and which has been verified by the NRC staff.

The staff review included independent development of load combinations acceptable to the NRC. The forces, computed by the vendor and the staff, as well as the resulting margins of safety computed by the staff for the concrete components of the HSM are included in Table 3.1.2-1 and found to be acceptable.

Table 3.1.2-2 presents the results of examination of the DSC support structure stresses and load combinations. The submitted data are extracted or derived from the structural design and analysis package which is part of the docketed material (Reference 1). Table 3.1.2-2 shows analyses for the load combination for the support rails, cross beams, support columns,

and lateral tie beams of the DSC support assembly. The allowable stresses shown in the tables are those developed by the NRC staff based on the submitted calculations. The calculated maximum combined load stresses shown in the table are below the allowable stresses. The axial and bending stresses, divided by their respective allowable stresses, are further combined in order to obtain an interaction margin of safety. This combination, per the AISC Specification for Structural Steel, June 1, 1989, Paragraph H1 (Reference 32) must have a value not greater than 1.0. Review of Table 3.1.2-2 shows that the selection of the steel sections used for DSC columns, cross beams, rails, and tie beams was found to be acceptable.

The rail-transverse member interconnection assembly, web stiffeners installed in the W8x35 members, and other miscellaneous HSM steel were checked and determined to be satisfactory. This included door and supports, collars, brackets, TC restraint assembly, heat shield, seismic restraints, and end stops.

The overall result of the review of the HSM and DSC support assembly structural design criteria, load combination, and final design is that the HSM and DSC support, as represented in the current docketed material (Reference 1), are considered to be structurally acceptable and meet the requirements of 10 CFR Part 72.

3.2 Dry Shielded Canister

3.2.1 Design Description of Dry Shielded Canister and Internals

There are two DSCs for the standardized PWR and BWR NUHOMS systems. The DSC is the secondary confinement barrier for the spent fuel. The primary confinement barrier is considered to be the fuel cladding. Each DSC will accommodate 24 PWR irradiated spent fuel assemblies or 52 BWR irradiated spent fuel assemblies. The DSC fits inside the transfer cask for handling and transfer operations, and is moved out of the TC and into the HSM with the hydraulic ram.

The main structural parts of both versions of the DSC consist of the following stainless steel items: a 1.6 cm (5/8-inch) thick shell, a thick outer bottom cover, a thick outer top cover plate, a thin inner top plate and a thin inner bottom plate. The BWR DSC has a total of nine 3.8 cm (1.5-inch) thick spacer discs made from SA-516 ferritic steel, whereas the PWR DSC has eight 5.1 cm (2-inch) thick spacer discs. Each DSC has four 7.6 cm (3-inch) diameter spacer support rods. The PWR DSC has twenty-four square fuel guide sleeves. The BWR DSC has slots cut in the spacer discs to accept borated stainless steel poison plates. Square shaped holes accommodate fifty-two BWR assemblies. In addition to the above structural items, there are two steel shield plates, and numerous small items associated with a grapple, vent and siphon system, and lifting lugs.

The SAR was reviewed in conjunction with the calculation package NUH 004.0202 (Reference 33) plus all of the computer runs which were made to simulate all the load conditions for both PWR and BWR DSC designs.

With one exception, the DSCs are designed as pressure vessels in accordance with the ASME B&PV Code Division 1 Section III Subsection NB-3000-1985 (Reference 9). Material qualifications are in accordance with Subsection NB-2000. Fabrication and inspection are to be done in accordance with Subsections NB-4000 and NB-5000, respectively. Proof pressure tests are to be carried out according to NB-6000. The exception is the weld design and inspection at the top and bottom of the DSC.

The double seal welds at the top and bottom of the DSC do not comply with all the requirements for the ASME B&PV Code, Section III, Subsection NB. The inspection procedures outlined in the SAR do not comply with the code; however, the NRC staff has determined that an exception to Code requirements for volumetric weld inspection is permissible due to the following reasons:

1. The closure to the confinement boundary is a double-weld design, i.e., two weld joints provide confinement.

2. The gauge pressure (for normal operation) inside the DSC is on the order 1 psig. Therefore, pressure stresses are very low.

3. The test method of ensuring a gas tight seal for the inner top seal weld is helium leak detection which is very sensitive. Also dye penetrant testing will be performed at two levels including the weld root pass and cover pass on the outer seal weld to ensure no weld surface imperfections. The test method of ensuring a gas tight seal for the bottom welds consists of a helium leak test by the fabricator for the inner seal weld in accordance with ASTM E499, in addition to two levels of dye penetrant testing for this weld. For the outer seal weld a multi-level dye penetrant test is specified.

3.2.2 Design Evaluation for DSC

3.2.2.1 DSC Normal Operating Conditions

The dry shielded canister was analyzed for: (1) dead weight loads, (2) design basis operating temperature loads, (3) internal pressure loads and (4) normal handling loads. Table 3.2.2-1 of this SER summarizes all the stress analysis results for normal operating conditions. The summary table shows stresses for each DSC component for each load condition analyzed by PNFS and the corresponding stress as verified by the NRC staff. Each stress intensity value was compared to the allowable stress for the particular material at the stated temperature as defined by the ASME Code for Service Levels A and B conditions. All calculated stresses are below allowable levels.

A. Dead Weight Loads for DSC

The dead load analysis for the DSC is presented in Section 8.1.1.1.A of the SAR. Both vertical and horizontal orientations of the DSC were considered. For the horizontal orientation the DSC inside the HSM, resting on the support rails, as well as the DSC inside the TC were modeled. The weights are shown in Tables 8.1-3a and 3b of the SAR, and stresses are shown in Table 8.1-7a and 7b of the SAR. The NRC staff reviewed these stress levels and reports them in Table 3.2.2-1 of this SER. Basically, all stresses are lower than the ASME B&PV Code allowable stresses by a substantial margin.

B. Design Basis Internal Pressure

The design basis normal internal pressure for the DSC is 47.6 kPag (6.9 psig), however, the analyzed pressure is 69 kPag (10 psig). This provides some conservatism in the analysis. Tables 8.1-4a and 8.1-4b of the SAR show five cases for operating and accident pressures. The ANSYS (Reference 21) finite element code was used to model the internal pressure load for the top and bottom portions of the DSC. PNFS used 345 kPag (50 psig) for the internal pressure and then multiplied the stress results by a factor corresponding to the particular load case per SAR Table 8.1-4a and 4b. Additionally these cases bound the internal pressure load of 55.2 kPa (8 psi) which exists during the helium leak test of the bottom inner seal weld during fabrication.

Thus, there are two seal welds for the pressure boundary at the top and the bottom of the DSC; i.e., the weld for the outer top cover plate, and an inner weld applied to the inner top plate. The outer top cover plate is the primary structural component, and the weld at that joint is much more substantial than the weld at the inner cover plate. The pressure stresses in the weld of the top inner and outer cover plates were evaluated for normal and accident cases and found to be below the allowable limits. The same type of analysis used to evaluate the top portion was used to evaluate the bottom position of the DSC. Shell stresses were evaluated for the remainder of the DSC by an ANSYS model. The computer model used 345 kPag (50 psig) as an internal pressure load. Because of a linear response of stress to the internal pressure load, the normal, off-normal and accident pressure cases could be evaluated simply by using factors of 0.2 and 1.01, respectively. All stress intensities were evaluated and were below allowable levels for pressure stress.

Tables 8.1-7, 8.1-7a, 8.1-7b and 8.1-7c of the SAR report the DSC pressure stresses for normal pressure of 69 kPag (10 psig). The staff reviewed these pressure stresses and concurs with them. The results of the SER are shown in Table 3.2.2-1 of this SER.

C. Design Basis Operating Temperature

PNFS has provided for axial thermal expansion of the basket assembly and the inner surfaces of the top and bottom end plates. Thus, no thermal stresses are induced due to restriction of expansion of internal parts. Similarly, PNFS has sized the spacer disc smaller than the

inside diameter of the DSC shell to preclude induced thermal stresses. PNFS performed four different finite element analyses to determine thermal stresses for differential expansion of the shell, the spacer disc, and the shell/end cover interface. The axial thermal gradient as well as the circumferential thermal gradient for the shell were modeled using thermal input from separate temperature evaluation (NUH004.0407 Rev. 0, Reference 34). These analyses were performed at all ambient conditions ranging from -40°C to 52°C (-40°F to 125°F), with and without solar loads, both horizontal and vertical orientation, and with and without air gaps. The parametric study was performed for both the PWR and BWR designs. The maximum temperature calculated determines the material allowable stresses, and the NRC determined that 260°C (500°F) bounds all cases for the DSC shell, disc, ends, and rods. Tables 8.1-13, 8.1-13a, in the SAR report the results of the DSC temperature distribution.

The thermal stresses are always defined as "secondary stresses" by the ASME B&PV Code. This means that higher allowable stresses are permitted and only Service Level A (for normal operations) and Service Level B (for off-normal operations) need be considered.

For normal operations at an ambient temperature of -40°C (-40°F), the maximum primary plus secondary stress for all thermal cases considered is 86,877 kPa (12.6 ksi) for the DSC shell. The allowable stress is 386,810 kPa (56.1 ksi). The BWR spacer disc has a thermal stress of 265,460 kPa (38.5 ksi), and, the allowable stress for the disc material is 448,860 kPa (65.1 ksi), so this is acceptable. The staff has reviewed all the documentation provided with the SAR and concurs that thermal stresses for the DSC for normal operations meet ASME B&PV Code requirements. They are shown in Table 3.2.2-1 of the SER.

D. DSC Handling Stress

The DSC handling load cases were divided into three groups, each requiring different analytical techniques. The design basis handling load is 50% of the DSC dry weight applied axially as it would be during normal operations when the loading ram is used to insert or extract the DSC from the HSM. The 50% factor is based on actual data obtained during the operation of a similar design at the ISFSI for the Oconee nuclear plant. Other normal cases are dead loads applied ± 1 g vertically, ± 1 g horizontally, and ± 1 g axially, and ± 1/2 g acting in all three orthogonal directions simultaneously. These could occur during transfer in the TC. The off-normal case is a jammed condition occurring inside the TC or HSM. All stresses in all components were evaluated and found to be below the ASME B&PV Code allowable. In addition to the confinement boundary, the grapple and lifting lugs were analyzed for the design basis loads, both normal and off-normal. Both components were evaluated against ASME allowables and found to be satisfactory. The resulting stresses are much lower than allowable stresses, as shown in Table 3.2.2-1 of the SER.

3.2.2.2 DSC Off-Normal Events

Three off-normal events were evaluated by PNFS for the DSC. They were off-normal pressure, jammed DSC during transfer and off-normal temperature. The off-normal temperature of -40°C (-40°F) ambient and the jammed DSC bound the range of loads.

A. Jammed DSC During Transfer

The basis for the postulated off-normal event, involving jamming of the DSC during transfer into the HSM, is the axial misalignment of the DSC. Should this occur, the hydraulic ram could exert an axial force equal to the weight of the loaded dry DSC, before a relief valve would prevent further load. A detailed finite element model including the actual load path through the grapple ring was performed to estimate this loading. The weight chosen by PNFS was 36,290 kg (80,000 pounds), a figure which exceeds the actual dry loaded weight, thereby affording additional conservatism. The bending stress in the bottom cover plate of the DSC is the highest stress anywhere in the DSC and is smaller than the allowable. Also, the bending stress in the DSC shell is well below the allowable stress. These results are shown in Table 3.2.2-2 of this report.

B. DSC Off-Normal Thermal/Pressure Analysis

The off-normal temperature range was taken as -40°C to 52°C (-40°F to 125°F) for the DSC inside the HSM (and inside the TC). The off-normal ambient temperature of -40°C (-40°F) is the basis for the high thermal gradient for the spacer disc, and the top and bottom corners of the shell. These high thermal gradients result in high thermal stresses which are shown to be lower than the allowable stresses for secondary stress.

C. DSC Off-Normal Pressure

The design basis off-normal internal pressure acting in the DSC is 38.6 kPag (5.6 psig), however the value used in the analysis is 69 kPag (10.0 psig). Both inner and outer DSC pressure boundaries were analyzed for the off-normal pressure case. Because the applied value of 69 kPag (10 psig) is the same for the off-normal and the normal, the stress results shown in Table 3.2.2-2 are the same as shown in Table 3.2.2-1.

D. DSC Load combination for Normal and Off-Normal Conditions

Table 3.2-5a of the PNFS SAR outlines the different load combinations considered for normal and off-normal conditions and accident. These conditions correspond to Service Levels A, B, C, and D of the ASME B&PV Code. Altogether, Table 3.2-5a of the SAR shows 17 combinations for all service levels. However, due to the fact that PNFS combined several combinations because normal and off-normal pressure cases are actually identical, and all thermal cases are bounded by one temperature providing the highest thermal gradient,

only nine unique combinations are shown in Tables 3.2.2-3, -5, and -7 of this SER. The staff summarized the combinations as described and finds that all stresses are below the allowables for Service Levels A and B. These are given in Table 3.2.2-3 of the SER. PNFS references are Tables 8.2-9a and 9b.

3.2.2.3 DSC Accident Conditions

Section 8.2 of the SAR defines the accident conditions associated with the standardized NUHOMS system. The accident conditions which were examined for the DSC are: (1) earthquake, (2) flood, (3) accident pressure, (4) accident thermal, and (5) accidental drop of the TC with DSC inside. Of these accidents, the drop case is by far the most severe. The SAR classifies the thermal accidents, the pressure accident, and the drop accidents as Service level D conditions, and the remaining accidents including seismic and flood as Service Level C conditions. The NRC staff concurs with this classification.

A consequence of classifying the thermal accidents as Service Level C or D is that the ASME B&PV Code does not require any stress analysis because of the ASME definition of thermal stresses as "secondary" stresses or "self-relieving" stresses. The only required consideration of the accident thermal cases was in a reduction of material properties at the higher temperature, which was properly accounted for.

A. DSC Seismic Analysis

The standardized NUHOMS system is designed to withstand seismic events which have a maximum horizontal ground acceleration of 0.25 g and a maximum vertical component of 0.17 g. These ground acceleration values are in agreement with 10 CFR 72.102(a)(2) for sites which are underlaid by rock east of the Rocky Mountain Front, except in areas of known seismic activity. NRC Regulatory Guide 1.60 (Reference 25) was used to determine dynamic load amplification factors for the horizontal and vertical directions. NRC Regulatory Guide 1.61 (Reference 26) was used to estimate the critical damping value for the DSC and the HSM. The DSC was conservatively correlated with large diameter piping and therefore has a damping value of 3%.

The DSC was evaluated for two distinct modes of vibration to establish fundamental frequencies, which in turn was used with Figures 1 and 2 in Regulatory Guide 1.60 to estimate the amplification. The shell cross-sectional ovaling mode turned out to be the only mode of interest since it is 13.8 Hz. The beam bending mode is too high to cause a dynamic amplification factor at 62.8 Hz. The resulting spectral accelerations for the DSC shell ovaling mode are 1.0 g and 0.68 g for horizontal and vertical directions, respectively. PNFS applied a factor of 1.5 to these accelerations to account for a multi-mode excitation. The applicant used the results of 75 g vertical drop analyses factored by (1.5 x 0.68/75) to obtain stresses for the DSC. For the horizontal orientation, PNSF used the results of the horizontal drop analysis factored by (1.5x1x2/75) to obtain the DSC stresses. DSC shell stresses

obtained from vertical and horizontal analyses are summed absolutely. These are recorded in Table 3.2.2-4.

The DSC was also evaluated for roll-out of the support rails. Horizontal and vertical accelerations of 0.37 g and 0.17 g were applied to the center of the DSC. The resulting factor of safety against roll-out was 1.23 according to an NRC staff evaluation. This corresponds to 1.30 as calculated by PNFS (Reference 1).

B. DSC Flood Condition

The design basis flood is specified in the SAR as 15.2 m (50 feet) of water with a maximum flow velocity of 4.6 m/s (15 feet per second). The flood condition is postulated to occur only when the DSC is housed inside the HSM. The consequences of the water flow will not affect the DSC inside the HSM, and the consequences to the HSM are reported in another section of the SER. Therefore, the DSC is only affected by the static head.

The DSC shell and outer cover plates and inner cover plates were modeled with a finite element analysis. PNFS modeled both inner and outer cover plates coupling the nodes of both plates to allow transmission of forces perpendicular to the plates. A more conservative approach would have been to assume no inner plates. However, the resulting stresses due to the 149.6 kPa (21.7 psi) external pressure are so small (~6,895 kPa (1 ksi)) that even if this conservative approach had been used, the resulting stresses would still be lower than the allowables. See Table 3.2.2-4.

C. DSC Accident Pressure

The bounding DSC internal accident pressure is 379.7 kPag (50.3 psig) according to Section 8.2.9 of the SAR. The maximum ambient temperature of 52°C (125°F) is assumed. This accident is postulated for a DSC inside the HSM, which has all inlet and outlet vents blocked, i.e., the adiabatic heat-up case. Assumptions are that the cladding of all fuel rods failed and that 100% of the fill gas and 30% of the fission gas are released inside the DSC. Under these conditions, the internal pressure could reach 379.7 kPag (50.3 psig). Table 3.2.2-4 of this SER shows the stress results of this case. All stress intensities are lower than the allowables.

The heat-up time period which is postulated by PNFS is five days. At that time the fuel cladding temperature is still below the cladding limit of 570°C (1058°F) for accident conditions. The adiabatic accident case bounds all thermal accidents and shows the need for daily inspection of air inlets and outlets. A more complete discussion of thermal performance may be found in Section 4 of the SER.

It should be noted that PNFS stated that 204.4°C (400°F) is the appropriate temperature to select the allowable stresses for the materials in the DSC (NUH004.0202 p.161). Table 8.2-9e of the SAR stated that 260°C (500°F) was the correct temperature. However, Table 8.1-

13 of the SAR indicates that the DSC shell reaches a maximum temperature of 303.9°C (579°F) for this accident; therefore, the NRC staff used lower material allowable stresses for this case.

D. DSC Load Combination (Thermal Accident) for Service Level C Accident Conditions

Tables 8.2-9c and -9d of the SAR show the results of two load combinations. These are the enveloping load combinations defined in Table 3.2-5a of the SAR. Table 3.2.2-5 in the SER shows the results of the three unique load combinations of C1, C2, and C7. There is a slight discrepancy between the allowable stress as reported in the SAR and as reported in this SER. The discrepancy arises because the maximum DSC temperature, as reported in the SAR is 304.4°C (580°F) for the accident pressure case; whereas, the allowables used in the SAR were based on 260°C (500°F). The NRC staff used the allowables associated with 304.4°C (580°F). The staff has recorded the results in Table 3.2.2-5 of the SER. The conclusion is that the design for the DSC is adequate.

E. Accidental Drop of TC with DSC

Because the cask drop accidents postulated in the SAR cause the highest stresses in the both the DSC and the transfer cask, it is appropriate to discuss the basis for selecting some of the parameters and assumptions for this case. All drop situations that were postulated in the SAR involve dropping the TC, with the DSC inside, at a maximum height of 203 cm (80 inches). The NRC staff considers these assumptions reasonable, because the loaded DSC will always be in the TC or inside the HSM whenever it is outside of the spent fuel pool building. The centerline of the HSM is located at 259 cm (102 inches) above the base pad; and therefore, the maximum drop height would be about 173 cm (68 inches) for the DSC, should it fall off of the transport trailer during loading or during transport between the spent fuel pool building and the ISFSI site. Thus, 203 cm (80 inch) drop is conservative.

Discussion of PNFS Design Methodology

One of the major cornerstones of the PNFS justification for the deceleration levels associated with the postulated cask drop accident is a research report published by EPRI (Reference 35). This work has attempted to correlate average deceleration values acting on the cask as a function of several parameters, including drop orientation, drop height, and concrete target hardness. The latter is a non-dimensional variable which includes the following parameters: concrete elastic modulus, concrete ultimate strength, soil elastic modulus, soil ultimate strength, steel reinforcement ratio and footprint of cask. The cask itself is considered to be infinitely rigid, so that from an absorbed energy standpoint, all kinetic energy would be absorbed by the target. The resulting cask deceleration values would represent an upper bound compared to an assumption which permitted the cask to absorb any elastic or plastic energy as a result of the impact. The EPRI report NP-4830 (Reference 35) was supplemented by a second report NP-7551 (Reference 36) which correlated a small sample of

existing experimental evidence of cask drops to the analytical presentation made in the NP-4830 report. The magnitude of the deceleration for each drop case was selected as the design criteria in Section 3 of the SAR as 75 g for either vertical or horizontal drop orientations and 25 g for the corner drop. The SAR values are based on an EPRI report (References 35 and 36). The target chosen for this scenario is a 91 cm (36-inch) thick under-reinforced concrete slab.

PNFS argues that drop accidents which might occur while the DSC, inside the TC, is enroute to the HSM, would be less severe than a drop accident of the DSC/TC on the reinforced concrete pad/apron adjacent to the HSM. Their argument is based on the fact that the road which would be used as the route between the spent fuel pool building and the HSM location would typically be 30 cm (12 inches) or less of concrete or asphalt on a compacted gravel bed. The "target" or impact surface would thus be significantly "softer" than the loading/unloading approach slab near the HSM. The thickness of this slab is not specified by PNFS, but would be no thicker than 91 cm (36 inches) and would be designed in accordance with ACI-318-83 (Reference 19).

Because references 35 and 36 do not document the deceleration time history, it was necessary to establish damping coefficients and the representative time histories for the three orientations, in order to predict appropriate dynamic load factors (DLF). The SAR provided additional material in Appendix C that included references to drop test data for a 81.6 t (90-ton) rail cask (Reference 37). The time histories from this reference were used to determine the DLFs for the different drop orientations.

Based on the documentation provided and the references cited, NRC staff concludes that the DLFs for the vertical, horizontal, and corner drops are 1.50, 1.75, and 1.25, respectively. These factors, when multiplied by the unfactored deceleration levels obtained from reference 36, produced values of 73.5 g, 66.5 g, and 25.0 g for the three drop orientations, which compare favorably with the deceleration values of 75 g, 75 g, and 25 g selected by PNFS in their design criteria. The staff determined that a damping value of 7% is conservative. This was based on sources in the open literature as well as the information provided by PNFS.

Discussion of NRC Staff Evaluation of Accidental Drop

The vendor's use of the EPRI report methodology (References 35 and 36) to determine design deceleration loads is not currently endorsed by the NRC. Therefore, the staff independently calculated elastic and plastic strains associated with the absorption of the kinetic energy resulting from dropping a fully loaded DSC through 203 cm (80 inches). The height of 203 cm (80 inches) is conservative because the DSC is not raised more than 173 cm (68 inches) during all transfer operations outside the spent fuel pool building.

The total strain rating on the DSC shell was calculated to be 1.28% compared to the minimum 40% elongation (strain) required for the material by the ASME B&PV Code,

Section II, Part A. Thus, the strain due to a vertical drop is a very small fraction of the total strain capacity.

The general membrane stress in the DSC shell was calculated from the strains and the moduli of elasticity and found to be equal to 142,730 kPa (20.7 ksi). This value is well below the ASME Code allowable of 289,590 kPa (42 ksi) for Service Level D conditions. Therefore, the factor of safety, as determined by the energy method is slightly in excess of 2 for the general membrane stress.

Based on these independent calculations, the NRC staff confirmed that the design of the DSC will provide ample margin of safety during a drop accident. In addition to the independent analysis described above, NRC staff evaluated all the design calculations submitted by PNFS and reported the results in Table 3.2.2-6. These design calculations were performed using an NRC-approved finite element computer program and are described in the next section of this SER.

The staff concluded that a drop of the loaded DSC from a height greater than 38 cm (15 inches) may cause damage to the DSC and the stored fuel. Because the ASME Code, Section III for Service Level D permits plastic deformation, portions of the DSC shell and basket may sustain damage, without compromising the confinement boundary or geometry of the spent fuel array. However, such potential damage is cause for limiting conditions of operation and surveillance.

a. The loaded DSC/TC shall not be handled at a height greater than 203 cm (80 inches) outside the spent fuel pool building.

b. In the event of a drop of a loaded DSC/TC from a height greater than 38 cm (15 inches) (a) fuel in the DSC shall be returned to the reactor spent fuel pool; (b) the DSC shall be removed from service and evaluated for further use; and (c) the TC shall be inspected for damage. The affected fuel may be subsequently transferred to dry storage if it meets the requirements for storage. The DSC may be returned to service or disposed of depending on the results of the evaluation. The TC may also be returned to service if the sustained damage is repairable.

These conditions are reflected in the conditions for system use, Section 12.2.10.

F. Discussion of Finite Element Models for Cask Drop

Reference 33 is a calculation package which presents all the structural analyses for the DSC. Together with 33 separate ANSYS computer runs, the calculation substantiates the design of the PWR and BWR DSC. NRC staff evaluated the entire package. In all cases, the SAR uses the ANSYS (Reference 21) finite element code to model the DSC and TC cask components. PNFS ran nineteen models for all drop cases. These cases included both PWR

and BWR DSCs, in vertical and horizontal orientations. Each part of each DSC modeled. For the vertical drop, an axisymmetric load and an axisymmetric geometry were modeled, using an equivalent 75 g static load. For the horizontal drop case, an axisymmetric structure with non-axisymmetric loading was modeled. The asymmetrical loading was approximated with a Fourier series technique in conjunction with an ANSYS element type designed to facilitate the use of the Fourier (harmonic) series. PNFS did not model the corner drop because they stated that the 75 g vertical and 75 g horizontal drop orientations are bounding for the 25 g corner case.

PNFS modeled thirteen cases for the horizontal drop orientation and seven cases for the vertical drop orientation. The shell, top cover plate and inner top plate were modeled using axisymetric geometry for top end drops. The shell, bottom cover plate and inner bottom plate were also modeled using axisymetric geometry for bottom end drops. The PWR loaded basket mass is greater than the BWR basket mass, therefore, the loads and the stresses are greater for the PWR DSC than for the BWR DSC.

The shell, top and bottom cover plates, and top and bottom inner plates were modeled for 3 horizontal orientations, i.e., 0°, 18.5°; and 90° azimuth oriented upward. These orientations correspond with possible drops at 0° and 90° azimuth for the DSC inside the TC falling off the transfer trailer, and 18.5° for a TC/DSC falling directly onto one of the cask rails on the support trailer.

Because the spacer discs for the PWR and BWR DSCs are completely different parts, it was necessary for PNFS to analyze both types of discs and both variations of plate thickness. For the 75 g vertical drop cases, the loads acting on the PWR spacer discs include the support rods, guide sleeves and oversleeves. For the 75 g vertical drop cases, the loads acting on the BWR spacer discs include the support rods, poison plates and poison plate support bars. An elastic plastic analysis using classical bilinear material properties with a conservative tangent modulus of 5% was used by PNFS for the top spacer disc for the 52-B DSC. The stresses were evaluated according to the ASME B&PV Code requirements and found to be acceptable. The calculation package reported the results of each computer run and summarized the results by listing the highest stresses in a particular component for the given drop orientation.

Each type of spacer disc was also modeled separately for two side drop orientations. The two orientations used for the 75 g 24-P basket were 0° and 90° azimuth upward. Elastic-plastic analysis was used to account for local yielding. Three azimuth orientations were used to model the 52-B spacer disc in the horizontal drop case. Elastic-plastic material properties were specified to predict stresses and displacements more accurately than using simple elastic properties. Again, all of the stresses which were calculated for each of the separate runs were reported by PNFS and evaluated by the NRC staff. Summary tables showing only the maximum stresses were provided in the calculation package.

Buckling analyses were performed on the spacer disc and support rods for vertical drop orientations, and for the 52-B poison plates in the side orientation. There is a factor of safety of 2.2 for the 52-B spacer disc out-of-plane, 1.8 for the 24-P spacer disc out-of-plane, 8.36 for the 24-P support rod (vertical drop), and 1.37 for the vertical drop case for the 52-B poison plates.

The support rods were analyzed for compliance with stress levels below allowable stress levels for the side drop and vertical end drop orientations. The top end drop resulted in a much higher stress level than the horizontal drop; however, the stress is below the allowable stress level.

Table 3.2.2-6 of the SER presents a summary of all the results of the 20 ANSYS computer analyses which were outlined above. Both vertical and horizontal results are given. The table shows that all calculated stress levels are below the ASME B&PV Code allowables for Service Level D. The table lists results that PNFS reported in the calculation package and the results obtained by NRC staff evaluation of the calculation package including all of the computer runs. The reader of Table 3.2.2-6 will note some differences between results of PNFS and NRC staff. These differences are attributed primarily to location of stresses in the actual models. NRC staff has consistently been more conservative than PNFS, and still the stress levels are lower than allowable levels.

The weld stresses for the critical secondary confinement joints between the top outer cover plate and the shell and the bottom outer cover plate and the shell were also evaluated by NRC staff. A joint efficiency factor of 60% per ASME B&PV Code ND-4245a(3) was used for a Class C, Type 3 weld, which is non-volumetrically examined. Table 3.2.2-6 shows the results of the individual load cases. All of the calculated stresses for the welds are below the allowable stress levels.

G. DSC Load Combination for Service Level D Accident Conditions

The SAR uses Service Level D for accident case allowable stresses. While NRC staff concurs with this decision, it must be coupled with the operating controls and limits as proposed in Section 10 of the SAR. Following a cask drop of 38 cm (15 inches) or greater, the DSC must be retrieved, and the DSC and the internals must be inspected for damage. NRC staff sets this operational control because it is in keeping with the high allowable stress of the Service Level D, i.e., permanent deformations of the DSC confinement boundary and the DSC internals are permitted under Service Level D conditions. Additionally, given the predicted failure of the weld between the guide sleeve and spacer disc at a deceleration below the 75 g level predicted, there is justification for inspection of the 24-P DSC and internals following any cask drop of 38 cm (15 inches) or greater. Note that for the 52-B DSC basket, the poison plates are designed to remain in place during the postulated drop accidents. Therefore, there is no possibility of an unanalyzed geometry in the poison plates with regard to subcriticality.

In both of the load combination cases D2 and D4, the term Pa, or accident pressure, is used. The maximum temperature associated with the maximum internal pressure of the DSC shell is given as 304°C (579°F) for the adiabatic heatup inside the HSM. However, this temperature is not reached when the DSC is inside the TC, which is the only scenario considered for drop. The maximum DSC shell temperature for the DSC inside the TC appears to be 231°C (447°F) from Figure 8.1-3b. This temperature is higher than 211°C (411°F) given in Table 8.1-13 for the DSC inside the TC. Therefore for the load combination cases of D2 and D4 which include accident pressure, the material properties for a DSC temperature of 260°C (500°F) is used to be conservative. Also conservative is the fact that the maximum pressure stress is used in cases D2 and D4; however, this pressure occurs under adiabatic HSM heatup conditions which are not possible with the DCS inside the TC.

Table 3.2.2-7 summarizes the results of the bounding two load combinations, D2 and D4. As noted in the table, the stress intensities are conservatively combined irrespective of location in the DSC, unless otherwise noted. For the case of the DSC shell, this conservative procedure was not used. However, the ASME B&PV Code requires that the stress intensities at any point for all load combinations shall be lower than an allowable stress; i.e., it is not required to combine stresses irrespective of location. As may be seen from Table 3.2.2-7, these conditions are met.

3.2.2.4 DSC Fatigue Evaluation

Section NB-3222.4a of Section III of the ASME B&PV Code (Reference 9) requires that components be qualified for cyclic operation under Service Level A limits unless the specified service loadings of the components meet all six conditions defined by NB-3222.4d. Although it is superficially clear that the DSC is inherently not subjected to high cycles of pressure, temperature, temperature difference, or mechanical loads, the Topical Report (TR) (Reference 38) previously evaluated each of the six conditions defined by the ASME B&PV Code in the submittal of the TR. NRC staff evaluated the previous analysis and concurs with the finding that the service loading of the DSC meets all conditions (Reference 39). Therefore a separate analysis is not required for cyclic service. NRC staff does not find any basis for finding that the service loading will deviate from the conditions assumed in the SAR, consequently no fatigue analysis is required.

3.2.2.5 DSC Corrosion

The suitability of stainless steel casks for containment of spent fuel was reported in "Laboratory Experiments Designed to Provide Limits on the Radionuclide Source Term for the Nevade Nuclear Waste Storage Investigateion's Project" by V. M. Overby and R. D. McCright. (SAND 85-0380, Reference 71). Stainless steel performs well in oxidizing conditions. Average oxidation rates for stainless steel are: 0.15 micrometer/yr submersed in water at temperatures in the 50°C to 100°C; 0.16 micrometer/yr in 100°C saturated steam, and 0.001 to 0.08 micrometers/yr in 150°C unsaturated steam. The oxidation environment of

the DSC in the standardized NUHOMS system is expected to be less than the above conditions. It is therefore concluded that even under worst oxidation condition, the corrosion depth of the DSC for a 50 year design life is insgnigicant and will not affect the DSC from performing its intended safety functions.

3.2.3 Discussion and Conclusions for DSC

Tables 3.2.2-1 through 3.2.2-7 have summarized the structural evaluation of the DSC for Service Levels A, B, C and D. All of the results show that the DSC complies with all of the requirements for ASME B&PV Code, Section III, Subsections NB and NF (Shell and basket respectively). This evaluation includes many conservatisms as discussed in Section 3.2.2.

3.3 Transfer Cask

3.3.1 Design Description of Transfer Cask

The TC is used to house the DSC inside of the spent fuel pool building and during transport operations between the spent fuel pool building and the HSM. It is designed to provide radiological shielding during all operations when the DSC has spent fuel in it. It is also designed to provide protection to the DSC against potential natural and operational hazards during transport of the DSC to the HSM.

The main structural parts of the TC consist of the following items: a 3.8 cm (1.5-inch) thick shell, top and bottom machined rings which join the shell to a 5.1 cm (2-inch) thick bottom cover plate, and a 7.6 cm (3-inch) thick top cover plate. Some of these items are stainless steel and other are ferritic steel. For lifting and transporting purposes, two ferritic steel upper trunnions are welded to the structural shell. For tilting and transport purposes only, two stainless lower trunnions are welded above the centerline of the structural shell. The shell itself may be either stainless steel or ferritic steel, depending on fabricator's option. The top cover plate is fixed to the top structural ring with sixteen 1.75-8 UNC bolts.

The payload of the TC is 40,826 kg (90,000 pounds) and the total gross weight with fuel and water but no top lid is 89,566 kg (197,500 pounds) enveloping 84,186 kg (185,600 pounds) with fuel, top lid but no water. These values are for the 52-B DSC assembly, which are slightly larger than the TC for the 24-P design. However, the load used for the analyses is 90,700 kg (200,000 pounds), thus providing a small conservatism.

The TC is classified as "important to safety" and has been designed to meet several criteria depending on the function. The primary function of transporting the DSC inside the TC is covered by the ASME B&PV Code, Section III, Subsection NC for Class 2 components. Load combinations have been extracted primarily from the ASME B&PV Code. The lifting and tilting trunnions have been designed to meet ANSI N14.6-1978. Table 3.2-1 of the SAR provides a complete summary of the design criteria. Material qualifications are in

accordance with Subsection NC-2000. Fabrication and inspection are to be done in accordance with Subsection NC-4000 and NC-5000, respectively.

The review of the structural integrity of the TC is presented according to function, i.e., either transfer function, or lifting/and tilting function. The ASME Code governs for transfer, whereas ANSI N14.6 governs for the lift and tilt trunnions.

The version of the TC which is specific for the PWR fuel has previously been evaluated by the NRC staff (Reference 16). However because the standardized NUHOMS system design heat load for 5-year-old PWR fuel is 24 kW instead of 15.8 kW, PNFS performed new thermal stress analysis which is evaluated in this SER. Additionally, because the BWR fuel is typically longer than the PWR fuel, PNFS provides a collar which is to be bolted on the top of the PWR TC. The stainless steel collar is designed in accordance with the ASME B&PV Code Section III, Subsection NC.

Material Considerations

This SER previously discussed the possible brittle fracture of ferritic steels. Paragraph 4.2.6 of ANSI N14.6 establishes low temperature criteria which are acceptable to the NRC staff for the TC design. This criteria was not used by PNFS. Instead the vendor used a test temperature of -40°C (-40°F) and an impact test procedure according to the ASME B&PV Code, Section III, Subsection NC. As a consequence of not using ANSI N14.6, the use of the TC shall be restricted. Inside the spent fuel pool building, for DSC/TC lift heights above 203 cm (80 inches), the minimum temperature shall be -17.8°C (0°F) or higher. For DSC/TC lift heights of 203 cm (80 inches) or lower, inside the spent fuel pool building, the minimum temperature shall be -28.9°C (-20°F) which corresponds to the minimum DSC basket use temperature. For all use outside the spent fuel pool building, the minimum temperature shall be -17.8°C (0°F). This corresponds with ANSI N14.6 paragraph 4.2.6, as well as the SAR paragraph 10.3.15. (Note all TCs have ferritic steel trunnions which are part of the lifting device.)

3.3.2 Design Evaluation of the Transfer Cask

3.3.2.1 TC Normal Operating Conditions

The calculation packages concerning the stress analysis for the TC are contained in several PNFS submittals because the Standardized TC derives from a design that was first evaluated by the NRC staff in the NUHOMS 24P Topical Report. (References 3, 4 and 40). There have been some additional analyses performed in conjunction with the TC for a site-specific application (Reference 41, calculation package BGE 001.0202 Revision 4), and the current submittal has two calculation packages NUH 004.0205 and NUH 004.0206 (References 42 and 43) which deal with the BWR collar and a new thermal stress analysis. All of these packages have been evaluated, and the summary tables in this SER reflect portions from all above analyses. It should also be noted that, compared with previously reviewed submittals,

portions of drawings for the Standardized TC differ dimensionally and with respect to material options. NRC staff has taken the various combinations into consideration in this SER.

The TC was designed for: (1) dead weight loads, (2) design basis thermal loads, and (3) handling and transfer loads. Table 3.3.2-1 of this SER summarizes all the stress analysis results for normal operating conditions. The summary table shows stresses for each TC component for the three load conditions analyzed by PNFS and the corresponding stress as verified by NRC staff. Each stress intensity was compared to the allowable stress for the particular material at the operating temperature as required by the ASME Code for Service Levels A and B conditions. For TC parts which allow more than one material specification, the lower allowables are listed in Table 3.3.2-1 and all subsequent SER tables.

A. Deadweight Loads for the TC

The TC is evaluated for two dead weight loads, e.g., a fully loaded cask hanging vertically from its two lifting trunnions and a fully loaded cask supported horizontally from its trunnions at top and bottom ends of the TC on the transport skid.

Review of calculation package NUH 004.0206 (Reference 43) indicates that the dead weight loads are trivial when compared to the stress allowables. The results are broken out by orientation, i.e., vertical, horizontal or corner in Table B-1 of NUH 004.0206. All the calculations were made using ANSYS runs for the three orientations (75 g vertical, 75 g horizontal and 25 g corner drops) and then factoring the drop accelerations to obtain 1 g for dead weight.

B. Thermal loads for the TC

Calculation Package NUH 004.0206 presents the thermal stress analysis associated with the TC. The normal temperature range is considered to be 17.8°C to 37.8°C (0°F to 100°F) and the off-normal excursions go to -40°C (-40°F) and 52°C (125°F) for the 5-year-old PWR and BWR fuel assemblies. The TC has been analyzed for the combined effects of the worst case radial, axial, and circumferential thermal gradients. Tables 1, 2 and 3 in the calculation package show that the 5-year-old PWR fuel on a 21.1°C (70°F) ambient day causes the highest gradient for radial and axial surfaces, whereas the 10-year-old PWR and BWR fuel cause the highest circumferential gradient for 21.1°C (70°F) ambient day. For ambient temperatures above 37.8°C (100°F), use of a solar shade for any operations involving the TC is required, because the 37.8°C (100°F) ambient temperature with solar load is outside of the design envelope for the neutron shielding of the TC.

The effects of dissimilar materials has been accounted for in the analyses by modeling the material properties of all four structural and non-structural (shielding) materials.

Table 5 of the calculation package summarized the results of three ANSYS runs, the top end axial, bottom end axial, and circumferential thermal stresses. PNFS conservatively summed the thermal stress intensities for axial and circumferential orientation for the shell regardless of actual location in the shell. The staff notes that Table 8.1-10a in the SAR does not reflect the results of the latest thermal analyses as provided in the calculation package NUH 004.0206 (Reference 43). However, the results as given in the SER in the Table 3.3.2-1 and 3.3.2-2 do incorporate the appropriate material. Also the tables in the SER incorporate different material allowables to account for the least strong material which could be used according to the PNFS drawings.

C. Operational handling loads for TC

As described in the dead weight load section above, there are two normal operation handling cases for the TC: vertically supported by the crane, and horizontally supported by the skid. The former is governed by ANSI N14.6 rules (Reference 8) and the latter is governed by the ASME B&PV Code (Reference 9).

The ANSI code is concerned with critical lift loads and consequently only addresses the lifting trunnion design and the TC shell in the vicinity of the lifting trunnion. The evaluation of this aspect of normal handling is discussed in a subsequent section of 3.3.2 of this SER. The actual transportation and transfer handling cases which are considered are 1 g vertical, 1 g horizontal, 1 g axial, and $\pm 1/2$ g applied simultaneously in all three directions. Table 3.3.2-1 of this SER summarizes the results of stress analysis for the TC shell and top and bottom rings and cover plates. All results for the normal handling case are satisfactory for Service Level A. Loads acting on the upper and lower trunnions are discussed in a subsequent portion of this SER.

D. TC Load Combinations for Normal and Off-normal Conditions

Table 3.2-5b of the SAR defines the different load combination for normal and off-normal events. These conditions correspond to Service Levels A and B of the ASME B&PV Code. There are five Level A conditions and two Level B conditions. Table 3.3.2-2 of this SER has combined the conditions as follows. Load combination 1 combines the worst case of load cases A1, A2, A3, A4 and B1, and load case 2 combines the worst case of A1, A2, A3, A5, and B2. Note that thermal stresses are the same for all cases, i.e., 21.1°C (70°F) ambient day for 5-year-old PWR fuel for radial and axial gradients, and 10-year-old PWR fuel for circumferential gradients. Cases A1, A2, and A3 are all exceptionally low. Case A4 and B1 correspond to TC transport outside the fuel pool building, and A5 and B2 correspond to transfer of the DSC into/out of the HSM.

Calculation Package NUH 004.0205 (Reference 42)describes the structural evaluation of the BWR cask collar. PNFS evaluated transfer loads as well as accidental drop loads for the collar, bolts and welds. Of these loads, only the transfer loads relate to Service Levels A and B. In order to estimate the dead load and thermal load, PNFS argued that loads would

be similar to those of the TC without the collar in the vicinity of the top structural ring. The NRC accepts this position based on similar geometry. In all cases, the allowable stresses were evaluated for a material temperature of 204°C (400°F), a conservative value. As shown in Table 3.2.2-2 all the stresses are lower than the allowables.

3.3.2.2 TC Accident Conditions

Section 8.2 of the SAR defines the accident conditions that affect the transfer cask. These conditions are: (1) earthquake, (2) accidental drop of the TC with the DSC inside, and (3) tornado wind loads. Tornado generated missiles, although not discussed in the SAR, was the subject of an NRC staff concern. It is addressed by PNFS and evaluated in this SER.

A. TC Seismic Condition

The design basis earthquake for the standardized NUHOMS system is 0.25 g peak horizontal ground acceleration and 0.17 g peak vertical ground acceleration. The SAR evaluates the effects of a seismic event on a loaded DSC inside the TC for two conditions. The first case postulated was for the TC in a vertical orientation in the decontamination area during closure of the DSC. For this case, the SAR shows that the loaded TC would not overturn during an earthquake, provided the loaded TC weighs 453.5 kg (190 kips) and experiences a horizontal acceleration not greater than 0.40 g. N.B. This 0.4 g horizontal acceleration is not ground acceleration, which is limited to 0.25 g; rather, it is the peak acceleration at some elevation above ground level, and could result from a ground acceleration of 0.25 g multiplied by an amplification factor.

The second case postulated in the SAR is for a seismic event occurring during the normal transport of the TC loaded on the trailer. The SAR stated that this case is enveloped by the handling case of ± 0.5 g acting in the vertical, axial, and transverse directions simultaneously. In Section 8.2.3 of the SAR the statement is made that the seismic stress intensities are to be taken as the normal transport stress intensities, because the accelerations for seismic are the same as those assumed for transport. NRC staff has included these stresses in Table 3.3.2-3. The individual stress intensities as well as the three load combination stress intensities are below ASME B&PV Code allowables.

B. Design Basis Tornado Wind Loads Acting on TC

The SAR shows that if the height to the top of the cask is 371 cm (146 inches), and the half wheel base of the transport vehicle is 168 cm (66 inches), there is safety factor of 1.5 against overturning when the TC is subjected to Design Basis Tornado (DBT) winds. Shell stresses were also evaluated and found to be 26,201 kPa (3.8 ksi), well below the 232,362 kPa (33.7 ksi) allowable for Service Level C. NRC staff concurs with the results for the DBT winds, provided the site-specific equipment, i.e., the trailer and the skid, correspond dimensionally with the example in the SAR.

C. Cask Drop Accident

This SER presents a detailed discussion of the cask drop accidents postulated by the SAR. This includes the basis for the selection of the parameters and the assumptions used for the ANSYS finite element models. All drop scenarios assume that the DSC is inside the TC. Thus all previous discussions about the drop apply equally to the DSC and the TC.

The ANSYS models predict that the stresses will exceed the yield stress for all major structural TC components except the top cover. The results in the columns entitled "NRC" in Table 3.3.2-4 are somewhat higher than those of the PNFS columns. This is due to the NRC staff conservatively selecting locations in the TC which may be more localized than locations selected by PNFS. However it is important to note that, in spite of this conservative process, the NRC staff results are still lower than allowable stress intensities. As discussed in the structural analysis of the DSC, any drop height higher than 38 cm (15 inches) shall require the retrieval and inspection of the DSC and its internals, in keeping with the guidelines of the ASME B&PV Code when using Service Level D allowables. Because the TC is also designed to ASME B&PV Code requirements, it will be necessary to inspect the TC as well, should it be subjected to a drop height higher than 38 cm (15 inches). Results are given in Table 3.3.2-4 of this SER. In all cases, the stresses are below the code allowables.

D. Tornado Generated Missiles

In docketed responses to NRC staff's questions for the NUHOMS-24P TR, PNFS presented results of an accident condition, namely design basis tornado (DBT) generated missiles. The two missiles considered are those suggested in NUREG-0800 (Reference 23), a 1,677 kg (3,697 pound) automobile, and a 125 kg (276 pound) 20 cm (eight-inch) diameter shell. TC stability, penetration resistance, and shell and end plate stresses were calculated and shown to be below the allowable stresses for Service Level D stresses. Although the SAR for the standardized NUHOMS system did not include specific reference to these loads, the NRC staff has included them. The NRC staff believes that there is no need to recalculate stresses for this accident case because identical shell, bottom plate material and thickness were used, and the identical tornado missiles were postulated for both versions of the TC. The top plate material for the standardized NUHOMS system is a higher strength material as noted in Table 3.3.2-5. The results from the TR are shown for completeness in Table 3.3.2-5.

E. TC Load Combination for Service Level D Accident Conditions

Table B-2 of the design calculation NUH 004.0206 (Reference 43) summarizes the load combination for the three accident cases postulated in the SAR. Three drop cases were considered (1) vertical drop, (2) corner drop, and (3) horizontal drop. In each drop case the dead weight loads were combined with the drop loads. Table 3.3.2-6 of this SER shows the results and the material allowables at 204°C (400°F) for the materials specified in the drawings. These allowables are somewhat lower than given in the SAR, but they represent

the values for the specified materials for 204°C (400°F). In all cases the actual stress intensities are lower than the allowables. Thus the TC meets the ASME B&PV Code for Service Level D conditions.

3.3.2.3 TC Fatigue Evaluation

Section C.4.2 of the SAR for the standardized NUHOMS system presents an evaluation of the loading cycles of the TC to show that the six criteria associated with NC-3219.2 of the ASME B&PV Code are met. NRC staff evaluated Section C.4.2 and concurs that all six criteria are met.

3.3.2.4 TC Trunnion Loads and Stresses

The relevant design criteria for lifting a "critical load," i.e., the spent fuel loaded in the DSC inside the TC while in the fuel building, are covered by ANSI N14.6, 1987 (Reference 8) and NUREG-0612 (Reference 14). Critical loads, defined by N14.6, are loads "whose uncontrolled movement or release could adversely affect any safety-related system or could result in potential off-site exposures comparable to the guideline exposures outlined in 10 CFR Part 100." In the case of the transfer cask, the cask lifting trunnions shall be considered as special lifting devices for the DSC. Because its design does not provide a dual-load path, the design criteria require that load bearing members shall be designed with a safety factor of two times the normal stress design factor for handling the critical load. Thus, the load bearing members must be sized so that yield stresses are no more than one-sixth minimum tensile yield strength of the material or no more than one-tenth the minimum ultimate tensile strength of the material. An additional allowance for crane hoist motion loads is recommended by NUREG-0612. Although Reference 14 does not quantify the magnitude of this dynamic load, ANSI NOG-1-1983 (Reference 44) does specify 15%, which was used in the SAR. Therefore the allowance for dynamic loads is appropriate. Because the titling trunnions are used in tilting and horizontal transfer and transfer modes instead of lifting, the lower tilting trunnions are designed to ASME III Class 2 criteria.

Table 3.3.2-7 summarizes the results for the lifting trunnion assemblies, weld regions, and cask shell. This table presents summary results for the lifting and supporting trunnions that are designed in accordance with: (1) ANSI N14.6 for critical lift loads, and (2) ASME for horizontal support loads. The local stresses in the TC at the intersection of the trunnion sleeve and the shell stiffener insert are calculated by using finite element analyses which appear in reference 18. The summary Table 3.3.2-7 shows that all stresses are less than the allowable stresses for both the ANSI N14.6 critical lift load conditions and the ASME B&PV Code for on-site transfer.

Table 3.3.2-7 also shows the results for the lower tilting trunnion assembly. Comparisons between the PNFS values and NRC staff values are given. All stresses are below the ASME III allowable stress intensities for Class 2 components. This table has included the consequences of using various material options which are noted in the drawings for the

standardized TC. For instance, the shell and trunnion sleeve materials have two options from which the fabricator may choose.

Table 3.1.2-1 HSM LOAD COMBINATION RESULTS

Section:	Floor Slab			Side Wall			Front Wall			Rear Wall		
Force:	Shear	Trans. Moment	Long. Moment	Shear	Trans. Moment	Long. Moment	Shear	Trans. Moment	Long. Moment	Shear	Trans. Moment	Long. Moment
Load Comb. 1	0.2	2.9	2.3	1.6	11.4	8.5	1.1	10.7	13.4	1.9	6.4	5.9
Load Comb. 3	7.5	154.0	117.0	20.7	231.0	185.0	6.4	494.0	293.0	12.3	118.0	127.0
Load Comb. 5	5.3	111.0	73.9	11.2	167.0	140.0	6.8	435.0	283.0	3.1	102.0	86.7
Load Comb. 6	5.1	110.0	67.0	13.7	152.0	127.0	3.0	308.0	193.0	4.4	105.0	78.7
Allowable	14.6	217.0	229.0	23.9	724.0	762.0	40.4	910.0	910.0	15.3	477.0	313.0
MOS	0.9	0.4	1.0	0.2	2.1	3.1	4.9	0.8	2.1	0.2	3.0	1.5
Load Comb. 7	3.8	146.0	155.0	8.4	340.0	340.0	5.3	691.0	574.0	1.5	366.0	142.0
Allowable	13.5	185.0	195.0	22.7	650.0	618.0	38.3	774.0	774.0	14.5	470.0	267.0
MOS	2.6	0.3	0.3	1.7	0.9	0.8	6.2	0.1	0.3	8.7	0.3	0.9

Section:	Roof Slab			End Shield Wall		Rear Shield Wall	
Force:	Shear	Trans. Moment	Long. Moment	Trans. Moment	Long. Moment	Trans. Moment	Long. Moment
Load Comb. 1	12.8	392.0	399.0	0	0	0	0
Load Comb. 3	27.1	755.0	928.0	114	60.4	172	172
Load Comb. 5	13.0	390.0	533.0	23	12.2	32	32
Load Comb. 6	15.3	445.0	596.0	92.5	49	167	167
Allowable	49.8	2,151.0	2,087.0	516	1,593	423	1,178
MOS	0.8	1.8	1.2	3.5	25.4	1.5	5.8
Load Comb. 7	20.0	618.0	1,035.0	0	0	0	0
Allowable	47.2	1,780.0	1,830.0				
MOS	1.4	1.9	0.8	n.a.	n.a.	n.a.	n.a.

shear in units of kips/ft.; transverse and longitudinal moments in units of in.-kips/ft.
MOS = Margin of Safety = (allow/calc)-1
n.a. not applicable

Load Comb 1 = 1.4 DL + 1.7 LL
Load Comb 3 = 0.75 (1.4 DL + 1.7 LL + 1.7 T + 1.7 W)
Load Comb 5 = DL + LL + T + E
Load Comb 6 = DL + LL + T + F
Load Comb 7 = DL + LL + Ta

Table 3.1.2-2 DSC Support Assembly Load Combination Results
Actual and Allowable Stress Values

COMPONENT Load Combination[a]	fa	Fa	fbx	Fbx	fby	Fby	AISC Sect 1.6[b]	fv	fv/Fv	Comments[c]
COLUMN										
Equation 1	2.43	16.63	1.65	20.99	0.38	20.99	.24	.10	.01	A
Equation 2	3.21	16.63	3.51	20.99	2.43	20.99	.33	.29	.02	A
Equation 3	5.88	16.63	6.04	20.99	3.75	20.99	.54	.38	.02	A
Equation 4	4.62	14.07	9.94	15.96	3.22	15.96	.72	.52	.03	A
Equation 5	4.43	18.66	1.13	23.76	3.68	23.76	.27	.19	.01	A
CROSS BEAM										
Equation 1	0.88	18.36	2.77	19.08	0.08	19.08	.20	1.95	.15	A
Equation 2	1.19	18.36	1.35	19.08	1.2	19.08	.13	5.33	.30	A
Equation 3	2.02	18.36	6.63	19.08	1.55	19.08	.34	4.28	.24	A
Equation 4	1.69	15.4	6.08	15.96	3.09	15.96	.40	3.36	.23	A
Equation 5	0.47	20.74	4.31	21.6	11.47	21.6	.44	3.89	.19	A
RAIL										
Equation 1	0.57	15.98	4.63	20.99	1.04	23.85	.30	1.07	.08	A
Equation 2	0.81	15.98	3.15	20.99	1.87	23.85	.19	3.25	18	A
Equation 3	1.48	15.98	10.98	20.99	2.94	23.85	.46	2.15	.12	A
Equation 4	0.51	13.57	9.09	17.56	3.38	19.95	.43	2.17	.15	A
Equation 5	3.93	17.89	12.2	23.76	8.38	27	.61	2.1	.10	A

Table 3.1.2-2 DSC Support Assembly Load Combination Results (Continued)
Actual and Allowable Stress Values

COMPONENT Load Combination[a]	fa	Fa	fbx	Fbx	fby	Fby	AISC Sect 1.6[b]	fv	fv/Fv	Comments[c]
TIE BEAM										
Equation 1	0.07	18.15	2.53	20.99	0.62	20.99	.15	.25	.02	A
Equation 2	1.27	18.15	4.47	20.99	5.32	20.99	.36	1.08	.06	A
Equation 3	4.92	18.15	13.63	20.99	11.11	20.99	.91	6.09	.34	A
Equation 4	3.52	15.24	12.58	27.56	8.04	17.56	.83	1.22	.08	A
Equation 5	1.23	20.5	0.82	23.76	3.47	23.76	.14	.09	.01	A

(a) Refer to Table 2.6 for definition of Equations 1 through 5
(b) Combined axial and bending stresses as a fraction of the allowable stress per AISC 8th ed., Section 1.6.1
(c) A = Allowable, U = Unallowable

Table 3.2.2-1 DSC Stress Analysis Results For Normal Loads Service Level A

Stress (ksi)

DSC Component	Stress Type	Dead Weight		10.0 psig Int. Pressure		100°F Thermal		Normal Handling		Allowable* Level A & B
		PNFSI	NRC	PNFSI	NRC	PNFSI	NRC	PNFSI	NRC	
DSC Shell	Pri Memb	1.1	0.6P	0.5	0.5	N/A	N/A	3.3	3.3	17.5
	Memb + Bend	4.7	6.2	4.5	5.4	N/A	N/A	9.6	9.6	26.3
	Pri + Second	11.0	18.4	7.7	7.8	12.6	17.3	15.0	15.0	52.5
Outer Top Cover Plate	Pri Memb	0.1	0.1	0.4	0.9	N/A	N/A	0.3	0.3	17.5
	Memb + Bend	0.1	0.1	4.2	5.6	N/A	N/A	0.3	0.3	26.3
	Pri + Second	0.1	0.1	13.8	14.0	0.2	0.2	0.3	0.3	52.5
Inner Top Plate	Pri Memb	0.1	0.1	0.4	0.7	N/A	N/A	0.3	0.3	17.5
	Memb + Bend	0.1	0.1	2.5	2.9	N/A	N/A	0.3	0.3	26.3
	Pri + Second	0.1	0.1	13.1	13.2	0.2	3.2	0.3	0.3	52.5
Outer Bottom Cover Plate	Pri Memb	0.1	0.1	0.2	1.2	N/A	N/A	2.0	2.3	17.5
	Memb + Bend	0.1	0.1	3.3	4.2	N/A	N/A	10.3	10.3	26.3
	Pri + Second	0.1	0.1	4.4	4.4	0.3	0.6	13.4	13.4	52.5
24-P Spacer Disc	Pri Memb	0.9	0.1	N/A	N/A	N/A	N/A	2.7	2.7	20.5
	Memb + Bend	1.5	1.6			N/A	N/A	4.5	4.5	30.8
	Pri + Second	2.2	2.2			26.5	32.7	6.6	6.6	61.5
52-B Spacer Disc	Pri Memb	1.0	1.0	N/A	N/A	N/A	N/A	1.5	3.0	20.5
	Memb + Bend	1.7	1.8			N/A	N/A	3.1	5.1	30.8
	Pri + Second	3.1	3.1			38.5	42.9	5.6	9.3	61.5
Inner Bottom Plate	Pri Memb	0.1	0.1	0.2	0.3	N/A	N/A	0.3	0.3	17.5
	Memb + Bend	0.1	0.1	0.5	0.5	N/A	N/A	0.3	0.3	26.3
	Pri + Second	0.2	0.2	0.5	0.5	2.3	7.6	0.7	0.6	52.5
Support Rods	Pri Memb	0.4	0.4	N/A	N/A	N/A	N/A	0.4	0.4	19.3
	Memb + Bend	0.8	0.76			N/A	N/A	0.9	0.9	29.0
	Pri + Second	0.8	0.76			~0	~0	0.9	0.9	57.9

* Allowable stress for Service Levels A and B

Primary Membrane	Sm = 17.5 ksi	Sm = 20.5 ksi	Sm = 19.3 ksi
Primary Memb + Bend	1.5 x Sm = 26.3	1.5 x Sm = 30.8	1.5 x Sm = 29.0
Primary + Secondary	3 x Sm = 52.5	3 x Sm = 61.5	3 x Sm = 57.9
Shell, Disc and end plates for 500°F	SA 240 Type 304	SA 516	SA 36

** Allowable stress for 300°F for spacer disc

3.0 Sm = 60.0

Table 3.2.2-2 DSC Stress Analysis Results For Off-Normal Loads Service Level B

Stress (ksi)

DSC Component	Stress Type	Internal Pressure 10.0 psig		Thermal 100°F		Off-Normal Handling		Allowable*
		PNFSI	NRC	PNFSI	NRC	PNFSI	NRC	
DSC Shell	Pri Memb	0.5	0.5	N/A	N/A	0.6	3.2	17.5
	Memb + Bend	4.5	5.4	N/A	N/A	9.6	13.2	26.3
	Pri + Second	7.7	7.8	12.6	17.3	30.	16.3	52.5
Outer Top Cover Plate	Pri Memb	0.4	0.9	N/A	N/A	0.1	0.1	17.5
	Memb + Bend	4.2	5.6	N/A	N/A	0.1	0.1	26.3
	Pri + Second	13.8	14.0	0.2	0.2	0.6	0.6	52.5
Inner Top Plate	Pri Memb	0.4	0.7	N/A	N/A	0.	0.	17.5
	Memb + Bend	2.5	2.9	N/A	N/A	0.	0.	26.3
	Pri + Second	13.1	13.2	0.2	3.2	0.8	0.8	52.5
Outer Bottom Cover Plate	Pri Memb	0.2	1.2	N/A	N/A	4.0	4.7	17.5
	Memb + Bend	3.3	4.2	N/A	N/A	20.6	20.6	26.3
	Pri + Second	4.4	4.4	0.3	0.6	26.8	26.8	52.5
24-P Spacer Disc	Pri Memb	N/A	N/A	N/A	N/A	0	—	20.5
	Memb + Bend			N/A	N/A	0	—	30.8
	Pri + Second			26.5	32.7	0	—	61.5
52-B Spacer Disc	Primary Memb	N/A	N/A	N/A	N/A	0	—	20.5
	Memb + Bend			N/A	N/A	0	—	30.8
	Pri + Second			38.5	42.9	0	—	61.5
Inner Bottom Plate	Pri Memb	0.2	0.3	N/A	N/A	0.	0.	17.5
	Memb + Bend	0.5	0.5	N/A	N/A	0.3	0.3	26.3
	Pri + Second	0.5	0.5	2.3	7.6	1.3	1.3	52.5
Support Rods	Pri Memb	N/A	N/A	N/A	N/A	0	—	19.3
	Memb + Bend			N/A	N/A	0	—	29.0
	Pri + Second			~0	~0	0	—	57.9

* Allowable stress is taken for Service Level B for SA 240 Type 304, SA 516 and SA 36 material at 500°F.

Table 3.2.2-3 DSC Load Combinations For Normal and Off-Normal Operating Conditions Service Levels A and B

Stress (ksi)

DSC Component	Stress Type	Case A2		Case[1] A3/A4		Case[2] B2		Allowable* Level A & B
		PNFSI	NRC	PNFSI	NRC	PNFSI	NRC	
DSC Shell	Pri Memb	1.0	1.1	4.3	4.4	1.6	4.4	17.5
	Memb + Bend	9.2	11.6	18.8	21.2	18.8	24.8	26.3
	Pri + Second	31.3	43.5	46.3	51.1[3]	50.5	52.4[3]	52.5
Outer Top Cover Plate	Pri Memb	0.5	1.0	0.8	1.3	0.6	1.1	17.5
	Memb + Bend	4.3	5.7	4.6	6.0	4.4	5.8	26.3
	Pri + Second	14.4	14.3	14.4	14.6	14.7	14.9	52.5
Inner Top Cover Plate	Pri Memb	0.5	0.8	0.8	1.1	0.5	0.8	17.5
	Memb + Bend	2.6	3.0	2.9	3.3	2.6	3.0	26.3
	Pri + Second	13.4	16.5	13.8	16.8	14.2	17.3	52.5
Outer Bottom Cover Plate	Pri Memb	0.3	1.3	2.3	3.6	4.3	6.0	17.5
	Memb + Bend	3.4	4.3	13.7	14.6	24.0	24.9	26.3
	Pri + Second	4.8	5.1	18.2	18.5	31.6	31.9	52.5
Inner Bottom Plate	Pri Memb	0.3	0.4	0.6	0.7	0.3	0.4	17.5
	Memb + Bend	0.6	0.6	0.9	0.9	0.9	0.9	26.3
	Pri + Second	2.9	8.3	3.6	8.9	4.2	9.6	52.5
24-P Spacer Disc	Pri Memb	0.9	0.9	3.6	3.6	0.9	0.9	20.5
	Memb + Bend	1.5	1.6	6.0	6.1	1.5	1.6	30.8
	Pri + Second	28.7	34.9	35.3	41.5	28.7	34.9	61.5
Support Rods	Pri Memb	0.4	0.4	0.8	0.8	0.4	0.4	19.3
	Memb + Bend	0.8	0.8	1.7	1.7	0.8	0.8	29.0
	Pri + Second	0.8	0.8	1.7	1.7	0.8	0.8	57.9
52-B Spacer Disc	Pri Memb	1.0	1.0	2.5	4.0	1.0	1.0	20.5
	Memb + Bend	1.7	1.8	4.8	6.9	1.7	1.8	30.8
	Pri + Second	41.6	46.0	47.2	55.3	41.6	46.0	61.5

Stress intensities conservatively combined irrespective of location unless otherwise noted.

*Allowable stress is taken for Service Levels A and B for SA 240 Type 304 Material at 500°F.

1. Load cases A3 and A4 are combined into one case because the stresses for the normal and off-normal pressure cases are the same.

2. Load cases B1, B2, B3, and B4 are combined into one case because the pressure for normal and off-normal conditions are the same and all thermal loads are bounded by the 100°F case.

3. The maximum stress intensity in the DSC shell for this load combination was found to be near the bottom of the shell, however the max S.I. of 18.4 ksi for the dead weight case is in the shell near a spacer disc. Consequently a lower DW stress value near the bottom of the shell was used for the combined stress.

Table 3.2.2-4 DSC Stress Analysis Results For Accident Conditions Service Level C[1]

Stress (ksi)

DSC Component	Stress Type	Seismic		Accident[2] Pressure (50.3 psig)		Flood (21.7 psi)		Accident Handling		Allowable*	
		PNFSI	NRC	PNFSI	NRC	PNFSI	NRC	PNFSI	NRC	@500°F	@580°F
DSC Shell	Pri Memb	1.8	1.7	2.7	2.7	1.2	1.1	0.6	3.2	21.	19.9
	Memb + Bend	18.2	14.3	22.6	16.8	1.2	1.1	9.6	18.6	29.1	27.6
Outer Top Cover Plate	Pri Memb	0.4	0.5	1.9	4.4	0.1	18.0	0.1	0.1	21.	19.9
	Memb + Bend	0.4	0.5	20.9	26.9	0.2	18.7	0.1	0.1	29.1	27.6
	Weld	---	---	---	---	---	---	---	0.5	---	---
Inner Top Plate	Pri Memb	0.4	0.5	2.1	3.5	0.2	0	0.	---	21.	19.9
	Memb + Bend	0.4	0.5	12.5	14.2	0.2	0	0.	---	29.1	27.6
Outer Bottom Cover Plate	Pri Memb	0.4	0.5	0.9	6.2	0.1	9.6	4.0	4.7	21.	19.9
	Memb + Bend	0.4	0.5	16.5	20.8	0.4	9.6	20.6	23.6	29.1	27.6
	Weld	---	---	---	---	---	---	---	12.4	---	---
24-P Spacer Disc	Pri Memb	3.2	2.9	N/A	N/A	0	0	0	---	30.7	28.6
	Memb + Bend	5.2	5.3	N/A	N/A	0	0	0	---	36.9	34.3
52B Spacer Disc	Pri Memb	4.0	3.8	N/A	N/A	0	0	0	---	30.7	28.6
	Memb + Bend	5.6	6.7	N/A	N/A	0	0	0	---	36.9	34.3
Inner Bottom Plate	Pri Memb	0.4	0.5	1.0	1.0	0.1	0	0	---	21.	19.9
	Memb + Bend	0.4	0.5	2.5	2.5	0.4	0	0.3	0.3	29.1	27.6
Support Rods	Pri Memb	0	0	N/A	N/A	0	0	0	---	23.2	21.6
	Memb + Bend	0.2	0.2	N/A	N/A	0	0	0	---	34.7	32.4

* Allowable stress for Service Level C @ 500°F for all cases except accident pressure.

P_m larger of 1.2 Sm or Sy = 21.0 for SA 240 Type 304
$P_L + P_B$ = smaller of 1.8 Sm or 1.5 Sy = 29.1 for SA 240 Type 304

1. No secondary stress needs to be evaluated according to ASME Code for Service Level C. This includes thermal as well as secondary bending stresses for pressure cases.

2. Accident pressure applied to inner cover plates, also allowable stresses for this condition should be based on 580°F.

Table 3.2.2-5 DSC Load Combinations for Accident Service Level C Cases[1]

Stress (ksi)

DSC Component	Stress Type	Case[2] C1		Case[3] C2		Case[4] C3/C4/C5/C6/C7		Allowable[5]	
		PNFSI	NRC	PNFSI	NRC	PNFSI	NRC	@500°F	@580°F
DSC Shell	Pri Memb	4.4	5.0	4.4	2.2	3.8	6.5	21.	19.9
	Memb + Bend	24.9	23.2[6]	22.7	12.7	22.0	25.8[7]	29.1	27.6
Outer Top Cover Plate	Pri Memb	2.4	5.0	2.1	19.0	2.1	4.6	21.	19.9
	Memb + Bend	21.4	27.5	21.2	24.4	21.1	27.1	29.1	27.6
Inner Top Plate	Pri Memb	2.6	4.1	2.4	0.8	2.2	3.6	21.	19.9
	Memb + Bend	13.0	14.8	12.8	3.0	12.6	14.3	29.1	27.6
Outer Bottom Cover Plate	Pri Memb	0.5	6.8	0.2	10.9	4.1	11.0	21.	19.9
	Memb + Bend	0.9	21.4	0.9	13.9	21.1	24.3[8]	29.1	27.6
24-P Spacer Disc	Pri Memb	4.1	3.8	0.9	0.9	0.9	0.9	30.7	28.6
	Memb + Bend	6.7	6.9	1.5	1.6	1.5	1.6	36.9	34.3
52-B Spacer Disc	Pri Memb	5.0	4.8	1.0	1.0	1.0	1.0	30.7	28.6
	Memb + Bend	7.3	8.5	1.7	1.8	1.7	1.8	36.9	34.3
Inner Bottom Plate	Pri Memb	1.5	1.6	1.5	0.4	1.1	1.1	21.	19.9
	Memb + Bend	3.0	6.1	3.0	0.5	2.9	2.9	29.1	27.6
Support Rods	Pri Memb	0.4	0.4	0.4	0.4	0.4	0.4	23.2	21.6
	Memb + Bend	1.0	1.0	0.8	0.8	0.8	0.8	34.7	32.4

Stress Intensities conservatively combined irrespective of location unless otherwise noted.

1. Secondary stresses are not required for Service Level C.
2. Seismic stresses are considered "mechanical loads" and must be combined with dead weight and accident pressure for C1.

Table 3.2.2-5 DSC Load Combinations for Accident Service Level C Cases (Continued)

3. Case C2 is dead weight, normal pressure and flooding.
4. Because thermal stresses need not be evaluated for Service Level C, cases C3 through C6 are bounded by C7 and consist of dead weight, accident pressure, and accident handling.
5. Allowables are based on a maximum DSC temperature of 500°F, except for the accident pressure condition for C3-C7 which has a maximum DSC temperature of 579°F.
6. The maximum stress intensity in the DSC shell for this load combination was found to be near a spacer disc, where the pressure stress is only 2.7 ksi. Thus the 26.9 ksi stress due to pressure shown in Table 3.2.2-4 is not used because it occurs near the end of the shell.
7. The maximum stress intensity in the DSC shell for this load condition is at the bottom end of the shell and is due primarily to the accident loading case. The dead weight stress = 6.2 ksi, and the accident pressure stress = 1.0 at node 515.
8. The maximum stress intensity in the outer bottom plate for this load condition is near the grapple connection and is due primarily to the accident handling case. The accident pressure at this location is 0.6 ksi.

Table 3.2.2-6 DSC Drop and Internal Pressure Accident Loads
Service Level D

Stress (ksi)

DSC Component	Stress Type	Vertical (75g)		Horizontal[2] (75g)		Accident[3] Pressure (50.3 psig)		Allowable[1]	
		PNFSI	NRC	PNFSI	NRC	PNFSI	NRC	@500°F	@580°F
DSC Shell	Pri Memb	10.2	12.7	26.1	32.9	2.7	2.7	42.0	39.8
	Memb + Bend	27.1	27.1	40.4	50.7	22.6	26.9	63.0	59.8
Inner Top Plate	Pri Memb	6.2	10.2	10.3	10.3	2.1	3.5	42.0	39.8
	Memb + Bend	10.2	10.2	10.3	11.3	12.5	14.2	63.0	59.8
Outer Top Cover Plate	Pri Memb	1.7	3.2	10.3	10.3	1.9	4.4	42.0	39.8
	Memb + Bend	3.2	3.8	10.3	11.3	20.9	26.9	63.0	59.8
Outer Bottom Cover Plate	Pri Memb	3.9	3.9	10.3	10.3	0.9	6.2	42.0	39.8
	Memb + Bend	4.5	4.6	10.3	11.3	16.5	20.8	63.0	59.8
Inner Bottom Plate	Pri Memb	3.3	3.6	10.3	10.3	1.0	1.0	42.0	39.8
	Memb + Bend	13.5	17.9	10.3	11.3	2.5	2.5	63.0	59.8
52-B (bound) Spacer Disc	Pri Memb	32.5	32.5	48.	48.	N/A	N/A	49.0	49.0
	Memb + Bend	60.5	60.5	65.	67.5	N/A	N/A	70.0	70.0
Support Rods (24-P bound)	Primary	32.4	33.2	0.3	3.0	N/A	N/A	40.6	40.6
	Memb + Bend	57.3	57.27	7.2	7.0			58.0	58.0
Top End Struct. Weld*	Primary	---	---	---	---	---	---	25.2	23.9
	Pri + Bend	4.7	6.6	---	11.3	19.7	25.5	37.8	35.9
Bottom End Struct. Weld*	Primary	---	---	---	---	---	---	25.2	23.9
	Pri + Bend	6.3	7.5	---	11.3	10.0	12.6	37.8	35.9

1. Allowables taken at worst cast temperature, i.e., for Case D1, T=500°F shell temperature, except accident pressure.
2. These columns for stresses for shell, top covers and bottom cover are taken from NUH004.0202 and the SAR for the standardized NUHOMS.
* Efficiency factor for Class C, Type 3 non-volumetric inspected welds = 0.6.
3. Accident pressure load applied to outer cover plates, also allowable stress for this condition should be based on 580°F.

Table 3.2.2-7 DSC Enveloping Load Combination Results for Accident Loads Service Level D

Stress (ksi)

DSC Component	Stress Type	Case D2 DW + To + Pa + FD		Case D4 DW + To + Pa + Lo		Allowable*
		PNFSI	NRC	PNFSI	NRC	500°F
DSC Shell	Pri Memb	29.3	36.2	3.8	6.5	42.0
	Memb + Bend	47.8	59.6[1]	36.9	41.6	63.0
Outer Top Cover Plate	Pri Memb	12.3	14.8	2.1	4.6	42.0
	Memb + Bend	31.3	38.3	21.1	27.1	63.0
Inner Top Plate	Pri Memb	12.5	13.9	2.2	3.6	42.0
	Memb + Bend	22.9	25.6	12.6	14.3	63.0
Outer Bottom Cover Plate	Pri Memb	11.3	16.6	4.1	10.9	42.0
	Memb + Bend	19.5	32.2	10.1	44.5	63.0
Inner Bottom Plate	Primary	11.4	11.4	1.1	1.1	42.0
	Memb + Bend	12.9	13.9	2.9	2.9	63.0
52-B (bound) Spacer Disc	Pri Memb	49.0	49.0	1.0	1.0	49.0
	Memb + Bend	66.7	69.3	1.7	1.8	70.0
Support Rods	Primary	32.8	33.6	0.4	0.4	40.6
	Memb + Bend	58.0	58.0	0.8	0.8	58.0
Top End** Struct. Weld	Primary	---	---	---	---	25.2
	Pri + Bend	30.4	36.9	24.9	26.1	37.8
Bottom End** Struct. Weld	Primary	---	---	---	---	25.2
	Pri + Bend	19.7	24.0	23.8	25.1	37.8

Stress intensities conservatively combined irrespective of location unless otherwise noted.

* Allowables are based on a maximum DSC temperature of 500°F.

** Efficiency factor for Class C, Type 3 non-volumetric inspected welds = 0.6.

1. The maximum stress intensity in the DSC shell for this load combination was found in the shell near the support rail for the 18.5° drop case. The accident pressure stress at this location is 2.7 ksi.

Table 3.3.2-1 Transfer Cask Stress Analysis Results for Normal Loads Service Levels A and B Allowables

Stress (ksi)

Cask Component	Stress Type	Dead Weight		Thermal**		Normal[1] Handling		Allowable*
		PNFSI	NRC	PNFSI	NRC	PNFSI	NRC	
Cask Shell	Pri Memb	0.7	0.7	N/A	N/A	0.5	0.5	18.7
	Memb + Bend	0.9	0.8	N/A	N/A	4.1	4.1	28.1
	Pri + Second	0.9	0.8	20.3	46.2 (top) 19.9 (bottom)	42.6	4.1	56.1
Top Cover Plate	Pri Memb	0.2	0.9	N/A	N/A	-	-	21.7
	Memb + Bend	0.6	1.0	N/A	N/A	6.3	6.3	32.6
	Pri + Second	0.6	1.0	11.7	11.7	6.3	6.3	65.1
Bottom Cover Plate	Pri Memb	0.2	0.8	N/A	N/A	-	-	18.7
	Memb + Bend	1.3	0.8	N/A	N/A	14.2	14.2	28.1
	Pri + Second	1.4	1.4	5.3	19.4	14.2	14.2	56.1
Top Ring	Pri Memb	0.2	0.8	N/A	N/A	-	1.5	20.3
	Memb + Bend	0.2	0.8	N/A	N/A	-	1.5	30.5
	Pri + Second	0.5	0.8	8.4	23.6	-	6.4	61.0
Bottom Ring	Pri Memb	0.4	0.4	N/A	N/A	-	4.6	20.3
	Memb + Bend	0.4	0.6	N/A	N/A	-	4.6	30.5
	Pri + Second	0.6	0.6	17.4	22.8	-	26.9	61.0
Transfer Cask Collar for BWR DSC	Pri Memb	0.2	0.8	N/A	N/A	0	1.5	20.3
	Memb + Bend	0.2	0.8	N/A	N/A	0	1.5	30.5
	Pri + Second	0.5	0.8	11.8	23.6	0	6.4	61.0

* Allowables taken at 400°F

** Thermal stresses are considered secondary stresses only

1. The PNFSI shell stress reported for handling is located at the trunnion, whereas the NRC stress is located in the middle of the shell where bending would be maximum.

Table 3.3.2-2 Transfer Cask Load Combinations for Normal Operating Conditions Service Levels A and B

Stress (ksi)

Cask Component	Stress Type	Load Comb 1 A1-A4, B1		Load Comb 2 A1-A3, A5, B2		Allowable*
		PNFSI	NRC	PNFSI	NRC	
Cask Shell	Pri Memb	1.2	0.7	0.6	1.2	18.7
	Memb + Bend	1.4	0.8	4.2	4.9	28.1
	Pri + Second	63.4[1]	47.1	62.7[1]	51.1	56.1
Top Cover Plate	Pri Memb	0.2	0.9	0.2	0.9	21.7
	Memb + Bend	0.6	0.9	6.9	7.3	32.6
	Pri + Second	18.6	19.0	11.9	12.9	65.1
Bottom Cover Plate	Pri Memb	0.2	0.8	0.2	0.8	18.7
	Memb + Bend	9.9	1.3	8.8	15.0	28.1
	Pri + Second	14.4	21.0	13.2	35.0	56.1
Top Ring	Pri Memb	0.2	0.2	0.2	2.3	20.3
	Memb + Bend	0.2	0.2	0.2	2.3	30.5
	Pri + Second	8.6	24.6	8.6	30.8	61.0
Bottom Ring	Pri Memb	0.4	0.4	0.4	5.0	20.3
	Memb + Bend	0.4	0.4	0.4	5.2	30.5
	Pri + Second	18.0	23.6	17.6	50.3	61.0
Transfer Cask Collar for BWR DSC	Pri Memb	-	2.3	- -		20.3
	Memb + Bend	-	2.3	- -		30.5
	Pri + Second	-	30.8	- -		61.0

* Allowables taken at 400°F

1. This stress is reported by PNFSI in Table B-2 of NUH 004.0206. In that table an allowable stress for primary plus secondary stress was taken as 70 ksi. However, the NRC staff has taken lower allowable stresses based on worst case materials which may be used according to drawing NUH 03-8001. The NRC staff has consequently summed stresses at a point, rather than the more conservative approach of summing stresses regardless of location.

Table 3.3.2-3 Transfer Cask Stress Analysis Results for Accident Loads Service Level C** Allowables

Stress (ksi)

Cask Component	Stress Type	Handling		Seismic		DBT Wind	Load Combination C2***		Allowables*
		PNFSI	NRC	PNFSI	NRC		PNFSI	NRC	
Cask Shell	Pri Memb	0.5	0.5	0.5	0.5	-	1.7	1.7	22.4
	Memb + Bend	4.1	4.1	4.1	4.1	3.8	5.4	9.0	33.7
Top Cover Plate	Pri Memb	-	-	-	-	-	0.2	-	26.0
	Memb + Bend	6.3	3.2	6.3	3.2	0.5	13.2	7.4	39.1
Bottom Cover Plate	Pri Memb	-	-	-	-	-	0.1	0.8	22.4
	Memb + Bend	14.2	14.4	14.2	14.4	0.5	28.6	29.2	33.7
Top Ring	Pri Memb	-	1.5	-	1.5	-	0.1	3.8	24.4
	Memb + Bend	-	1.5	-	1.5	-	0.1	3.8	36.5
Bottom Ring	Pri Memb	-	4.6	-	4.6	-	0.1	9.6	24.4
	Memb + Bend	-	4.6	-	4.6	-	0.1	9.6	36.5
Transfer Cask Collar for BWR DSC	Pri Memb	-	1.5	-	1.5	-	-	3.8	24.4
	Memb & Bend	-	1.5	-	1.5	-	-	3.8	36.5

* Allowables taken at 400°F

** No secondary stresses need to be evaluated according to the ASME Code for Service Level C.

*** The C2 load combination includes deadweight, seismic, and handling loads.

Table 3.3.2-4 Transfer Cask Drop Accident Loads
Service Level D Allowables

Stress (ksi)

Cask Component	Stress Type	Vertical Top Drop		Vertical Bottom Drop		Horizontal Drop with DW		Corner Top		Corner Bottom		Allowables*
		PNFSI	NRC	PNFSI	NRC	PNFSI	NRC	PNFSI	NRC	PNFSI	NRC	
Cask Shell	Pri Memb	9.6	30.1	8.7	8.7	3.8	21.9	8.3	7.6	4.6	8.5	44.9
	Memb + Bend	10.2	33.6	8.7	8.7	15.5	22.7	13.9	7.6	13.9	11.3	64.4
Top Ring	Pri Memb	25.2	24.2	-	-	12.2	17.3	2.1	7.5	-	-	48.7
	Memb + Bend	25.2	46.4	-	-	12.2	22.6	2.9	12.6	-	-	73.1
Top 3" Cover	Pri Memb	24.2	24.2	-	-	5.8	7.7	2.7	11.7	-	-	49.0
	Memb + Bend	24.2	24.2	3.7	3.7	5.8	8.0	14.1	14.1	-	-	70.0
Bottom 2" Cover	Pri Memb	-	-	22.9	22.9	5.8	6.4	-	-	-	33.1	44.9
	Memb + Bend	14.4	14.4	22.9	22.9	5.8	11.6	-	-	33.1	33.1	64.4
Bottom Ring	Pri Memb	-	-	14.0	26.7	12.2	12.2	-	-	9.7	10.7	48.7
	Memb + Bend	-	-	14.0	26.7	12.2	25.9	-	-	9.7	33.9	73.1
Transfer Cask Collar for BWR DSC	Pri Memb	13.0	13.0	-	-	12.2	17.3	-	-	-	-	48.7
	Memb + Bend	25.2	46.4	-	-	12.2	22.6	-	-	-	-	73.1
Bolts for Top Cover	Ave. Tension	-	-	-	-	-	-	27.1	29.7	-	-	77.0
Bolts for Collar	Ave. Tension	0	0	0	0	-	-	-	-	74.3	74.3	153.0
	Shear	0	0	0	0	56.9	56.9	-	-	39.6	39.6	64.3

* Allowables taken at 400°F

Table 3.3.2-5 Transfer Cask Stress Results for Tornado Driven Missile Impact Stress (ksi)

Cask Component	Stress Type	Massive Missile	Pen. Resist Missile	Allowable*
Cask Shell	Pri Memb Pri + Bend	6.4 20.5	4.9 30.3	44.9 64.4
Top Cover	Pri Memb Pri + Bend	0 19.7	0 13.2	49.0 70.0
Bottom Cover	Pri Memb Pri + Bend	0 17.5	0 22.2	44.9 64.4

* Allowable stresses based on Service Level D Allowables at 400°F

Table 3.3.2-6 Transfer Cask Load Combinations for Accident Conditions Service Level D

Stress (ksi)

Cask Component	Stress Type	Case D1 (Vert)		Case D2 (Corner)		Case D3 (Horiz)		Allowable*
		PNFSI	NRC	PNFSI	NRC	PNFSI	NRC	
Cask Shell	Pri Memb	9.7	30.8	4.7	9.2	3.9	22.6	44.9
	Memb + Bend	10.3	34.4	14.3	12.1	15.6	23.5	64.4
Top Ring	Pri Memb	25.4	25.0	2.2	8.3	12.3	18.1	48.7
	Memb + Bend	25.4	47.2	3.0	13.4	12.3	23.4	73.1
Top Cover	Pri Memb	24.4	25.1	2.9	12.6	5.9	8.6	49.0
	Memb + Bend	24.4	25.2	14.7	15.1	6.0	9.0	70.0
Bottom Ring	Pri Memb	14.1	27.1	10.1	11.1	12.3	12.6	48.7
	Memb + Bend	14.1	27.3	10.1	34.5	12.3	26.5	73.1
Bottom Cover	Pri Memb	23.1	23.7	0	33.9	5.9	7.2	44.9
	Memb + Bend	23.1	23.7	34.4	33.9	6.0	12.4	64.4

* Service Level D Allowables at 400°F

Table 3.3.2-7 Summary of Stress Analyses for Upper Lifting Trunnions and Lower Resting Trunnions, Weld Regions and Cask Shell

Component Location	Critical Handling Loads (per ANSI N14.6)		On-Site Transportation Loads (per ASME III Class 2)	
	Stress Intensity (ksi)	Allowable (ksi)	Stress Intensity (ksi)	Allowable (ksi)*
	Section			
Upper Trunnion (lift pin)	A-A 5.9	13.1	N/A	N/A
(support pin)	B-B 10.0	13.1	N/A	N/A
Upper Trunnion Sleeve (ferritic material)	C-C 6.3	9.0	5.9	45.0
Shell at Sleeve	5.0	5.4	27.7	45.0
	Plane		Plane	
Weld Sleeve/Trunnion (Upper Trunnion)	1 6.9	9.0	1 6.4	45.0
	2 7.7	9.0	2 8.3	45.0
	Plane		Plane	
Weld Sleeve/Insert (Upper Trunnion)	1 5.0	9.0	1 6.0	45.0
	2 5.5	7.0	2 5.4	7.0
	3 4.4	5.4	3 4.2	32.6
Lower Trunnion	N/A	N/A	4.1	28.1
Lower Trunnion (304 material)	N/A	N/A	5.6	28.1
Sleeve Shell at Sleeve			26.9	28.1
			Plane	
Weld Sleeve/Trunnion (Lower Trunnion)	N/A	N/A	1 5.6	28.1
			2 7.3	28.1
			3 5.7	28.1
			Plane	
Weld Sleeve/Cask (Lower Trunnion)	N/A	N/A	2 6.0	28.1

* Material allowables are taken at 400°F stresses and materials have been conservatively combined so that worst case for material options is recorded.

4.0 THERMAL EVALUATION

Introduction

This section evaluates the thermal hydraulic aspects of the designs for the HSM, DSC, and TC. The designs are evaluated against design criteria as presented in the SAR or otherwise determined to be acceptable. Below is a description of the thermal hydraulic review which was made followed by the actual evaluation.

Description of Review

Two similar standarized NUHOMS system designs have previously been reviewed, the 7-P design (Reference 45) and the 24-P design (Reference 40). Safety evaluation reports have been issued for both of these designs (Reference 46 and 39, respectively). The standardized NUHOMS design, which is the subject of this SER, differs from the 24-P thermal design in several respects.

The standardized NUHOMS system design has increased maximum heat load capacity (1 kilowatt per PWR assembly) compared to the 24-P design (0.66 kilowatt per PWR assembly). This increased heat load capacity was achieved by redesign of the air flow passages (larger flow area, but less height difference from the bottom of the DSC to the air outlet), increased fuel temperature limits for normal operation, and more realistic thermal calculations. The design has also been extended to include the capability to store 52 BWR spent fuel assemblies, referred to as the 52-B design.

In light of the two previous reviews of similar designs, this review focused on the differences from the previously approved designs. The review addressed the capability of the standardized NUHOMS system design to maintain fuel cladding temperatures and concrete temperatures within the acceptance criteria during normal, off-normal, and accident conditions, and also on the correctness of thermal gradients determined for use in the structural analysis.

Limiting temperature gradients used for structural and confinement integrity evaluations have been reviewed and found to be determined in an acceptable manner.

In view of the differences in thermal hydraulic characteristics between the standardized NUHOMS system design and the previously approved designs, the staff considered it prudent to require a thermal performance verification for the first standardized NUHOMS system to be used. The discussion for the thermal performance verification is included in Section 12.1.7.

Applicable Parts of 10 CFR Part 72

10 CFR 72.236(f) requires the cask design to have adequate heat removal capacity without active cooling systems. The staff considered Subpart F criteria as well. Section 72.122(h) provides that the fuel cladding should be protected against degradation and gross rupture. Section 72.122(b) states that structures, systems, and components important to safety should be designed to accommodate the effects of, and be compatible with, site characteristics and environmental conditions associated with normal operation, maintenance, and testing; and to withstand postulated accidents. Section 72.126(a) provides that radioactive waste storage and handling systems should be designed with a heat-removal capability having testability and reliability consistent with their importance to safety. Also, Section 72.122(f) states that systems and components that are important to safety should be designed to permit inspection, maintenance, and testing.

4.1 Review Procedure

The material reviewed consisted of the SAR, including several sets of responses to staff comments and concerns, submitted by the applicant. A number of design calculations provided by the applicant were also utilized in the review. This material was evaluated to establish compliance with the applicable requirements of 10 CFR Part 72. The review addressed the adequacy of natural convection cooling to maintain fuel cladding and HSM concrete temperatures within acceptable limits during normal, off-normal, and accident conditions. Thermal hydraulic aspects of the transfer cask design were also evaluated.

4.1.1 Design Description

The standardized NUHOMS system provides for the horizontal storage of irradiated fuel in a dry shielded canister which is placed in a concrete horizontal storage module. Decay heat is removed from the fuel by conduction and radiation within the DSC and by convection and radiation from the surface of the DSC. Natural circulation flow of air through the HSM and conduction of heat through concrete provide the mechanisms of heat removal from the HSM.

Spent fuel assemblies are loaded into the DSC while it is inside a transfer cask in the fuel pool at the reactor site. The transfer cask containing the loaded DSC is removed from the pool, dried, purged, backfilled with helium, and sealed. The DSC is then placed in a transfer cask and moved to the HSM. The DSC is pushed into the HSM by a horizontal hydraulic ram. The dry, shielded canister is constructed from stainless steel plate with an outside diameter of 107.8 cm (67.25 inches), a wall thickness of 1.6 cm (0.625 inches), and a length of 473 cm (186.25 inches). Within the DSC, there is a basket consisting of either 24 square cells in the PWR design or 52 cells for the BWR design. An intact spent fuel assembly is loaded into each cell yielding a capacity of either 24 PWR or 52 BWR assemblies per DSC. Spacer disks are used for structural support. The DSC has double seal welds at each end and rests on two steel rails when placed in the HSM.

The HSM is constructed from reinforced concrete, carbon steel, and stainless steel. Passageways for air flow through the HSM are designed to minimize the escape of radiation from the HSM but at the same time to permit adequate cooling air flow. Decay heat from the spent fuel assemblies within the canister is removed from the DSC by natural draft convection and radiation. Air enters along the bottom of each side of the HSM, flows around the canister, and exits through flow channels along the top sides of the module. Heat is also radiated from the DSC to the inner surface of the HSM walls where, again, natural convection air flow removes the heat. Some heat is also removed by conduction through the concrete.

The standardized NUHOMS system utilizes a transfer cask, transporter, skid, and horizontal hydraulic ram. The transporter, skid, and horizontal hydraulic ram are not affected by the thermal analysis. During transport and vacuum drying of the fuel in the DSC, heat is removed by conduction through the transfer cask.

4.1.2 Acceptance Criteria

Peak fuel cladding temperature for normal operation, calculated according to the methodology of PNL-6189, Reference 47, is the acceptance criterion relative to the fuel. The staff has reviewed this methodology and found it to be acceptable. Resulting peak fuel cladding initial storage temperature limits are 384°C (724°F) for PWR fuel and 421°C (790°F) for BWR fuel based on the long term average ambient temperature not exceeding 21°C (70°F). For accident events, the staff has accepted a peak fuel cladding temperature limit of 570°C (1058°F) based on Reference 48. Meeting these criteria for storage with an inert cover gas ensures that the criteria in of 10 CFR 72.122(h) are satisfied.

In Table 3.2-1 of the SAR, the applicant cites ACI-349-85 and ACI-349R-85 as the applicable criteria for concrete design. These criteria are acceptable to the staff with the exception that calculated concrete temperatures for both normal operation and accident conditions could exceed those of the ACI criteria. Use of a concrete mix and aggregate specification for higher temperatures is therefore required in lieu of the ACI 349 criteria. (See the materials discussion in Section 3.0 of this SER.)

This review of the thermal analysis also addresses the correctness of the calculated maximum temperatures and of temperature gradients used for input to structural evaluations. The manner of calculating maximum temperatures and thermal gradients for the structural analyses has been found to be acceptable.

4.1.3 Review Method

The thermal analysis was reviewed for completeness, applicability of the methods used, adequacy of the key assumptions, and correct application of the methods. Thermal analysis was performed primarily with the HEATING-6 (Reference 49) computer program. HEATING-6 is a part of the Oak Ridge National Laboratory SCALE package and is an

industry standard code for thermal analysis. Representative input and output was reviewed to establish that the code use was appropriate and that the results were reasonable. Independent calculations were performed to check other portions of the analysis which did not use the HEATING-6 code. This includes the natural convection cooling calculation which determines the magnitude of the air flow through the HSM. Since the heat flux through the DSC surface is significantly increased for the standardized NUHOMS system design compared to the previous 24-P design (Reference 40), the ability to remove heat by air cooling is particularly important. An independent determination of the form losses and friction pressure drop, together with a balancing of the buoyancy and flow loss, confirmed the adequacy of the analysis.

Review effort was directed toward establishing the validity of the analyses and their applicability to the design. The analyses were reviewed for completeness, validity of input, reasonableness of results, and applicability of results to support conclusions regarding the design. In general, independent analyses were not performed. However, in some cases energy balances and simplified calculations were performed as a check.

4.1.4 Key Design Information and Assumptions

The key assumptions made in the thermal analysis are listed below.

1. The total heat generation rate for each fuel assembly is less than or equal to one kilowatt for each PWR assembly and equal to or less than 0.37 kilowatts for each BWR assembly. All heat is assumed to be generated in the fuel region.

2. Each dry storage canister contains 24 intact PWR assemblies or 52 intact BWR fuel assemblies.

3. A factor of 1.08 to account for uneven heat generation along the length of the fuel was assumed for thermal analysis inside of the DSC.

4. Design long term average ambient temperature of the external environment is taken as 21°C (70°F) with normal solar heat load. Limiting normal conditions of -17.8°C (0°F) and 37.8°C (100°F) ambient are also considered.

5. Off-normal temperatures of -40°C (-40°F) and 52°C (125°F) ambient temperature are considered. The 52°C (125°F) case assumed maximum solar heat load for the HSM, but use of solar shades and hence no solar heat load for the transfer cask is permissible above 37.8°C (100°F).

6. Accident condition is assumed to be total blockage of all inlets and outlets for five days with either -40°C (-40°F) or 52°C (125°F) and maximum solar heat flux ambient conditions.

7. A helium atmosphere is assumed to be maintained within the DSC over the entire storage life of the standardized NUHOMS system.

4.2 Horizontal Storage Module (HSM)

4.2.1 Design Evaluation

The SAR was reviewed in conjunction with three calculation packages, References 50, 51 and 52, and responses to several rounds of staff questions.

4.2.1.1 Normal Operation

A total of three cases were considered for normal operating conditions based on the temperature of the air at the inlet of the module. These are: (1) entering air at -17.8°C (0°F) representing "minimum normal conditions," (2) entering air at 21°C (70°F) representing "normal conditions," and (3) entering air at 37.8°C (100°F) representing "maximum normal conditions." The method of calculating concrete temperatures is acceptable. Concrete temperatures on the inside surface of the HSM reach 100°C (212°F) for the 24-P design, and 89.4°C (193°F) for the 52-B design, when the ambient temperature is 37.8°C (100°F). As long as the air temperature at the outlet remains within 37.8°C (100°F) of the ambient (for a heat load of 24 Kw), and maximum long term ambient temperature limits are not exceeded, the conservative design calculations show that the HSM concrete temperature limits and fuel cladding temperature limits will not be exceeded.

The applicant determined that the HSM wall temperature gradients for the 37.8°C (100°F) ambient temperature case are bounding among the normal and off-normal cases. These thermal gradients are either best estimate or conservative and are suitable for use in the structural loading analysis.

4.2.1.2 Off-Normal Conditions

The off normal conditions considered were an inlet temperature of -40°C (-40°F) representing extreme winter minimum and 52°C (125°F) representing extreme summer maximum. Solar heat flux of 1,397 kJ/hr-m^2 (123 Btu/hr-ft^2) was included for the extreme summer case. The concrete temperature on the inside surface of the HSM reaches a maximum of 121°C (250°F) for the 24-P design and 110°C (230°F) for the 52-B design for the extreme condition of 52°C (125°F) ambient temperature.

4.2.1.3 Accident Conditions

The total blockage of all air inlets and exits was analyzed as the accident case (Reference 50). Adiabatic heatup of the various components was assumed, with the HSM providing the slowest heatup rate. Adiabatic heating starting at the 52°C (125°F) inlet temperature condition is the limiting case for maximum concrete and fuel cladding temperatures. A heatup period of five days was assumed. The resulting concrete temperatures 249°C (480°F) on the floor and 231°C (448°F) on the roof are significantly above the acceptance criteria of 177°C (350°F) for accident conditions.

4.2.2 Discussion and Conclusions

Since concrete temperatures may exceed 93.3°C (200°F) during limiting normal conditions, a concrete mix and aggregate specification must be included for the elevated temperatures expected. These are considered acceptable as an alternative to satisfaction of the testing requirements of ACI 349, Section A.4.3. Satisfaction of the limiting condition for operation of a 37.8°C (100°F) maximum air temperature rise on exit from the HSM gives a reasonable degree of assurance that adequate cooling is achieved.

Based on the plot of HSM inside roof temperature response shown on page 25 of Reference 50, the HSM concrete temperature may exceed 177°C (350°F) sometime after 40 hours of flow blockage. Concrete temperature over 177°C (350°F) in accidents (without the presence of water or steam) is not acceptable due to reduction in strength and durability. In view of the facts that a PNFS proposed 4-day inspection frequency of the air inlets and outlets result in: (1) exceeding the ACI 349 and NRC staff recommendations for maximum concrete temperature limits, and (2) approaching the fuel clad temperature limits recommended by PNL-6189 (Reference 47), the NRC staff requires a daily inspection for the air inlets and outlets.

The applicant used thermal load inputs for the HSM stress analysis from the 37.8°C (100°F) ambient temperature case. Thermal gradients are best estimate or conservative and are suitable for use in the structural loading analysis.

See Table 4.2 for a summary of some component temperatures as a function of ambient temperatures.

4.3 DSC

4.3.1 Design Evaluation

The SAR was reviewed in conjunction with five calculation packages, References 53 through 57, and responses to several rounds of staff questions.

4.3.1.1 Normal Operating Conditions

Fuel cladding temperature limits based upon the methodology of PNL-6189 (Reference 47) have been proposed by the applicant. These limits are acceptable to the staff. The licensee must demonstrate that all fuel to be stored meets the criteria of PNL-6189, which are the accepted limits. The applicant has provided analyses demonstrating that these limits can be satisfied for normal and off-normal conditions provided that the fuel meets the acceptance criteria for storage.

The normal operating condition at 21°C (70°F) ambient air inlet temperature and the high temperature limiting normal case at 37.8°C (100°F) ambient air inlet temperature were

analyzed for the DSC and internals. HEATING-6 input and output for the 21°C (70°F) case and the corresponding HSM run were reviewed. No errors were detected. Trends and magnitude of the resulting temperature distributions are reasonable. The HEATING-6 computer program is an industry standard code which is widley used for nuclear power plant thermal design analyses and has been in use for about twenty years. Application of the code for thermal design analysis of the standarized NUHOMS spent fuel storage system was performed in a conservative manner where input parameters were chosen so that conservatively high fuel cladding and HSM concrete temperatures were calculated. For the 21°C (70°F) ambient case, maximum cladding temperatures of 366°C (691°F) for PWR fuel and 417°C (782°F) for BWR fuel are below the acceptance criteria of 384°C (724°F) for PWR fuel and 421°C (790°F) for BWR fuel. For the limiting normal case of 37.8°C (100°F) ambient, the cladding temperatures are 371°C (699°F) for PWR and 420°C (788°F) for BWR fuel. These cladding temperatures are also below the acceptance criteria of 384°C (724°F) and 421°C (790°F), respectively, for PWR and BWR fuel. The temperature distribution within a spacer disk was determined from HEATING-6 calculations for the 37.8°C (100°F) ambient temperature case. Results of calculations with both helium and steel in the space between the guide sleeves and the DSC shell were used to determine the temperature distribution. The method used is appropriate for determining a temperature distribution for use in structural loading evaluations.

4.3.1.2 Off-Normal Conditions

The off-normal condition considered is the 52°C (125°F) ambient inlet air temperature. HEATING-6 calculations were performed which yielded a maximum cladding temperature of 423°C (793°F) for BWR fuel and 374°C (705°F) for PWR fuel compared to the acceptance criterion of 570°C (1058°F).

4.3.1.3 Accident Conditions

The applicant has analyzed the complete blockage of all air inlets and outlets for a 5-day period. This adiabatic heatup is addressed in References 50, 51 and 52. The fuel temperatures were calculated for this 5-day heatup period. A steady-state temperature distribution was assumed within the DSC, since its heatup rate is faster than that of the HSM. The resulting temperature distribution is acceptable for use in determining thermal loads. At the end of this time, BWR fuel has reached a temperature of 495°C (923°F), while PWR fuel has reached 447°C (836°F). These temperatures are below the acceptance criteria of 570°C (1058°F) for accident conditions.

4.3.2 Discussion and Conclusion

For normal operating temperatures the maximum fuel cladding temperature is below the acceptance criteria for both the 52-B and the 24-P designs. Therefore the fuel cladding is expected to be protected against degradation leading to gross rupture during long-term storage and the proposed maximum heat loads are acceptable.

Maximum temperatures for both PWR and BWR fuel remain below the acceptance criteria of 570°C (1058°F) off-normal conditions and for accident conditions following five days of adiabatic heatup. With a daily inspection frequency, as required by the NRC, the concrete temperature of the HSM does not exceed the 177°C (350°F) accident limit.

4.4 TC

The SAR was reviewed in conjunction with two calculation packages, References 58 and 59.

4.4.1 Design Evaluation

During loading, evacuation, and transport to the HSM, the DSC is located within a transfer cask. In this case the steady-state temperature distribution through the cask was determined by modeling the cask as a series of cylindrical annular regions to determine the radial distribution and as a series of heat slabs to determine the axial distribution. Both vertical and horizontal orientations of the transfer cask were considered.

4.4.1.1 Normal Operating Conditions

Ambient temperatures of -17.8°C (0°F), 21°C (70°F) and 37.8°C (100°F) were considered for normal operation. The surface temperature at the top and bottom of a horizontal DSC was determined for thermal stress evaluation. Axial temperature distribution was also determined for each of the three ambient temperatures. Maximum DSC surface temperature of 113°C (235°F) occurred at the top of the horizontal cask for the 37.8°C (100°F) case with the 24-P design heat load.

4.4.1.2 Off-Normal Operating Conditions

Extreme ambient conditions of -40°C (-40°F) and 52°C (125°F) were considered as off-normal events. Axial and radial temperature distributions were determined using the same methods as for normal operating conditions. A solar shade will be used whenever temperatures exceed 37.8°C (100°F). Therefore the 37.8°C (100°F) case becomes the limiting case for thermal gradient determination, yielding a 16.1°C (61°F) through wall temperature gradient.

Vacuum drying of the DSC before backfill with helium will result in increased fuel temperatures relative to normal conditions due to the decreased heat transfer within the DSC. Methods similar to that used for the normal operation case were used to determine the temperature gradient through the transfer cask wall, except that in this case the cask was oriented vertically. With an internal vacuum in the DSC, the maximum fuel cladding temperature was calculated to be 531°C (988°F) for BWR fuel and 487°C (909°F) for PWR fuel, both below the short term or accident temperature limit of 570°C (1058°F). These fuel clad temperatures for PWR and BWR fuels are calculated as steady state temperatures. It should be noted that the actual time required for vacuum drying of the DSC is small

compared to the time necessary for the fuel cladding temperature to reach the calculated maximum value.

4.4.1.3 Accident Conditions

While references 58 and 59 consider the accident condition of loss of the neutron shield material, these results were not used in the structural loading evaluation since complete loss of the solid neutron shield material is not postulated to occur. Instead thermal loads from the 37.8°C (100°F) normal operation case were used.

4.4.2 Discussions and Conclusions

The limiting thermal condition of 37.8°C (100°F) with solar heat load was used to determine the thermal loading for all cases. Provided that a solar shade is used whenever the ambient temperature exceeds 37.8°C (100°F), the use of the 37.8° (100°F) case to determine the thermal loads is acceptable.

Since the DSC will be in the transfer cask for relatively short periods compared to the storage lifetime, use of the short term accident temperature limit for maximum fuel temperature is acceptable. The maximum fuel temperature is below this limit for all of the cases considered.

Table 4.2 Summary of Component Temperatures as a Function of Ambient Temperatures

Temperatures (°F)

Ambient	DSC Inside HSM				DSC Inside TC	
	Cladding	Cladding Limit	Concrete	Concrete Limit	Cladding	Cladding Limit
70 (normal steady state operation)	691 (PWR) 782 (BWR)	724 (PWR) 790 (BWR)	175 (PWR) 158 (BWR)	200		
100 (off-normal, but not accident)	699 (PWR) 788 (BWR)	724 (PWR) 790 (BWR)	212 (PWR) 193 (BWR)	200[1]	(DSC Vacuum) 909 (PWR) 988 (BWR)	1058
125 (steady state)	705 (PWR) 793 (BWR)	1058	250 (PWR) 230 (BWR)	350		
125 (5 day adiabatic heatup)	836 (PWR) 923 (BWR)	1058	480 (PWR) 480 (BWR) (350 @ 40 hrs.)	350[2]		

1. If concrete temperatures of general or local areas exceed 200°F but would not exceed 300°F, no tests or reduction of concrete strength are required if Type II cement is used and aggregates are selected which are acceptable for concrete in this temperature range.

2. Use of any Portland cement concrete where "accident" temperatures may exceed 350°F requires submission of tests on the exact concrete mix (cement type, additives, water-cement ratio, aggregates, proportions) which is to be used. The tests are to acceptably demonstrate the level of strength reduction which needs to be applied, and to show that the increased temperatures do not cause deterioration of the concrete either with or without load.

5.0 CONFINEMENT BARRIERS AND SYSTEMS EVALUATION

5.1 Description of Review

The primary confinement boundaries for fission products which are contained in the spent fuel are the intact fuel cladding (no known or suspected gross cladding breeches) and the DSC, which is a welded steel cylinder that is vacuum dried and backfilled with helium. The HSM is designed to provide shielding, structural support, ventilation, and weather protection for the DSC, but is not part of the confinement boundary. Similarly, the TC is designed to provide shielding during handling and transfer operations, but is not part of the confinement boundary.

The main parts of the secondary confinement boundaries for both versions of the DSC are a shell, outer bottom and top cover plates, top and bottom shield plugs, and inner top and bottom cover plates. The basket assembly is not part of the confinement boundary. The only penetrations required in the DSC are in the siphon and vent block, which is a part of the top shield plug. Two penetrations (with quick disconnect fittings) for vacuum drying and backfilling with helium are located in this block. No credit for confining the helium atmosphere is taken by the disconnect fittings. Two cover plates that mate with the siphon block are seal welded over the penetrations after the drying and helium backfilling operations have been completed. No components are required to penetrate the DSC after helium backfilling is completed and the structural lid is welded in place. No penetrations are used during spent fuel storage.

Tables 8.1-4a and 8.1-4b of the SAR report the design basis internal helium pressure for the PWR and BWR versions of the DSC. The PWR canister has marginally higher internal pressure but in all cases is very low. For normal operations with intact fuel cladding on the design basis average ambient temperature day 21°C (70°F), the internal helium pressure is 34.5 kPag (5.0 psig). For a 37.8°C (100°F) ambient temperature day, the internal helium pressure is only 47.6 kPag (6.9 psig). The accident case considers a 52°C (125°F) day with the HSM vents blocked and 100 percent cladding failure with the release of all of the fuel rod fill gas and 30 percent of the fission gas generated in PWR assemblies irradiated to 40,000 MWD/MTU.

The DSC is designed to meet the requirements of ASME Code, Section III, Subsection NB, and constructed in accordance with the ASME Code, Section III, Article NB-4000.

5.2 Design Evaluation

The staff considered Paragraph (1) of 10 CFR 72.122(h) as pertinent to storage of spent fuel in DSC. It requires that "spent fuel cladding must be protected during storage against degradation that leads to gross ruptures" and "that degradation of the fuel during storage will not pose operational safety problems with respect to its removal from storage." Also,

10 CFR 72.236(e) requires that the cask must be designed to provide redundant sealing of confinement systems.

The confinement barriers and systems design are considered acceptable if it is demonstrated that: (1) there is a high likelihood that the DSC internal helium atmosphere will remain intact; (2) there is no operable corrosion mechanism that will lead to failure of the DSC to provide confinement; (3) there is no long-term cladding degradation mechanism in a helium atmosphere which could cause significant degradation or gross ruptures; and (4) there is insufficient time for cladding or fuel degradation during cask dry-out or off-normal behavior that could pose operational problems with respect to the removal of fuel from storage.

An NRC review of the NUHOMS design was made and documented in Section 5.0 of the Safety Evaluation Report for NUHOMS-24P, Revision 1, dated April 1989 (Reference 39). The NRC staff review was directed at two aspects of the design: (1) the mechanical integrity of the DSC, and (2) the long-term behavior of the cladding in an inert environment. The review was also directed at the impact of cask dry-out and off-normal behavior on fuel removal. The present review was directed at examining the review made in Section 5.0 of the SER of NUHOMS-24P to ensure that the results of that review also apply to the Standardized NUHOMS-24P and 52-B DSCs.

Because all of the parts of the confinement boundary are fabricated from stainless steel, the DSC is adequately protected from corrosion mechanisms.

The staff reviewed DSC integrity from the point of view of weld quality and inspections, adequacy of leak check methods on welds, other leakage paths, and long-term helium migration. Reviewers also checked the calculated stresses in the DSC under normal, off-normal, and accident conditions in order to verify that they are in the acceptable range. Cyclic fatigue of the DSC was also reviewed.

The staff evaluated cladding degradation by reviewing the pertinent technical literature in order to identify known and postulated mechanisms of gross failure of fuel in an inert atmosphere. Based on the literature search, calculations were performed for postulated failures by the mechanism of diffusion controlled cavity growth using a conservative set of assumptions. This was the only failure mechanism considered likely under the DSC storage conditions. The staff also evaluated the possible long-term creep or sag of the fuel cladding under the storage conditions since creep could affect removal of the fuel from storage. The effects of oxidation during the fuel dry-out period were also considered.

In its analysis of the cavity growth mechanism, the NRC staff determined that the area of decohesion at the end of a 20-year storage life is less than 4 percent, not high enough to cause any concern. The NRC staff found that creep or sag of the fuel cladding might equal 0.05 cm (0.020 inch), much less than the clearance available for removal of the rods. For postulated fuel oxidation of defective fuel rods during cask dry-out or off-normal behavior, cladding strain was determined to be much less than 1 percent so that fuel defect extension or

fuel powdering is not anticipated. For all these areas of potential fuel degradation, the NRC staff calculations for the B&W fuel gave such conservative results, that they can equally well be applied to the fuels which meet the fuel specification cited in this SER. The NRC staff concludes that the standardized NUHOMS system design provides sufficient means to ensure that the fuel cladding is adequately protected against degradation that leads to gross ruptures.

The staff verified that the design of the DSC provides redundant sealing.

5.3 Conclusions

The staff concludes that the standardized DSC design conforms to the relevant criteria in 10 CFR 72.122(h), and 10 CFR 72.236(e) regarding redundant sealing of confinement systems. Confinement is ensured by a combination of inspection techniques, including radiographic inspection, helium leak testing, and dye penetrant testing. The confinement capability of the empty DSC shell without either bottom or top plate assemblies is ensured by radiographic inspection of the longitudinal full penetration weld and the girth weld. Helium leak testing is performed to ensure adequate sealing of the inner bottom cover to the DSC cylindrical shell. The confinement capability of the loaded DSC is ensured by helium leak testing after welding and dye penetrant testing of the inner top cover plate and vent port block to the DSC shell. All partial penetration welds are multiple pass welds subjected to dye penetrant testing. The inner seal welds are also helium leak tested. The outer seal welds are dye penetrant tested.

A number of tests and specifications relevant to confinement integrity were proposed by the vendor and determined to be appropriate. These include:

- DSC vacuum pressure during drying (SAR Section 10.3.2)
- DSC helium backfill pressure (SAR Section 10.3.3)
- DSC maximum permissible leak rate of inner seal weld (SAR Section 10.3.4)
- DSC dye penetrant test of closure welds (SAR Section 10.3.5).

These are included as conditions for system use in Section 12.2 of this report.

The staff also requires the following condition for the use of the system:

1. If fuel needs to be removed from the DSC, either at the end of service life or for inspection after an accident, precautions must be taken against the potential for the presence of oxidized fuel and to prevent radiological exposure to personnel during this operation. This can be achieved with this design by the use of the penetration valves which permit a determination of the atmosphere within the DSC before the removal of the shield plug. If the atmosphere

within the DSC is helium, then operations can proceed normally with fuel removal either via the transfer cask or in the pool. However, if air is present within the DSC, then appropriate filters should be in place to preclude uncontrolled release of airborne radioactive particulate from the DSC via the penetration valves. This will protect both personnel and the operations area from potential contamination. For the accident case, personnel protection is required as appropriate.

The above is included as a condition for system use in Section 12.1.2 of this report.

Because the DSC confinement barrier material is stainless steel, adequate provision for corrosion protection is part of the DSC design. Additionally, the fluence of the neutron flux for a 20-year period of storing the spent fuel is eight orders of magnitude less than the fluence encountered within an operating reactor. For this reason embrittlement due to neutron flux is not considered to be a concern. A discussion of neutron embrittlement follows.

The fuel cladding which has been placed within the DSC has been subject to extensive neutron irradiation while it was present in the reactor core producing power. A representative order of magnitude total neutron flux within the core of an operating nuclear power plant is approximately 1 E+12 neutrons/sq. cm.-sec. Core residence time at power for nuclear fuel prior to its placement in the NUHOMS ISFSI is about 28.8 months (80% power operation over a 36-month time period). This results in a total fuel cladding irradiation neutron fluence of 7.5 E19 neutrons/sq. cm. In comparison, the bounding total neutron emission per fuel assembly delineated in the NUHOMS fuel specification is 2.23 E8 neutrons/second. This source, distributed over the entire surface of the decay heat producing section of the fuel rods in a fuel assembly, results in an average neutron flux of 8.9 E+2 neutrons/sq. cm.-sec. Over the 20-year life of the ISFSI, this additional neutron fluence to the cladding would be 5.6 E11 neutrons/sq. cm. which is eight orders of magnitude lower than the fluence already accumulated during power operation. The neutron fluence to the fuel cladding represents an insignificant addition to the fluence absorbed by the cladding during power operation. The long-term ISFSI storage would, therefore, not be expected to create any neutron irradiation induced damage to fuel cladding beyond that already caused by irradiation of this fuel while residing in the reactor core during power operation.

The staff considered three potential mechanisms for the deterioration of the integrity of fuel rods. The first was potential failure of the cladding by the diffusion controlled cavity growth mechanism. The staff determined that the area of decohesion was less than 4 percent, not high enough to cause any concern. The second mechanism examined was creep of the fuel cladding. It was found to be a maximum of 0.05 cm (0.020 inches), much less than the clearance available for removal of the rods. The third mechanism examined was oxidation of the fuel during the dry-out period. Cladding strain was determined to be much less than 1 percent for postulated fuel oxidation of defective fuel rods. The staff concludes that the

DSC design has provided sufficient means to assure that the fuel cladding is adequately protected against degradation that leads to gross rupture.

6.0 SHIELDING EVALUATION

6.1 Design Description

The radiation shielding for the stored fuel assemblies is provided by a variety of shielding materials and operational procedures. The HSM has thick concrete walls and roof as well as a heavy shielded door and shielded air outlet vents to reduce radiation. The DSC has thick shield plugs on both ends to reduce the dose to plant workers. The TC has shielding incorporated in both ends as well as the entire shell.

From the operational side of the design, placement of demineralized water in the annulus between the TC and DSC provides shielding as well as reducing contamination of the DSC exterior as well as the TC interior surfaces. The use of water in the DSC cavity during placement of the DSC inner seal weld reduces direct and scattered radiation exposure. Temporary shielding is used during DSC draining, drying, inerting and closure operations.

6.2 Design Evaluation (Source Specification and Analysis)

The neutron and gamma ray radiation source terms were calculated for design basis fuels (for the PWR B&W 15x15 fuel and for the BWR GE 7x7 fuel). For both fuels a maximum initial enrichment of 4.0 wt% U-235 is assumed and a post-irradiation cooling time equivalent to five years is assumed. The PWR fuel is assumed to be subjected to an average fuel burnup of 40,000 MWD/MTU; the BWR fuel is assumed to be subjected to an average fuel burnup of 35,000 MWD/MTU.

Neutron source are based on spontaneous fission contributions from six nuclides (predominantly Cm-242, Cm-244, and Cm-246 isotopes) and (α, n) reactions due almost entirely to eight alpha emitters (predominantly Pu-238, Cm-242, and Cm-244). The fission spectrum used in shielding calculations is a weighted combination of the principal contributors. The total neutron source strength for PWR fuel is 2.23E8 neutrons per second per assembly (or 5.35E9 neutrons per second for 24 PWR fuel assemblies). The total neutron source strength for BWR fuel is 1.01E8 neutrons per second per fuel assembly (or 5.25E9 neutrons per second for 52 BWR fuel assemblies).

For the BWR fuel the neutron and gamma source strengths and gamma energy spectrum and decay heat were calculated using the ORIGEN 2 computer code (References 60, 61). ORIGEN 2 is a widely used and validated code which has been utilized and approved for previous ISFSI radiation source term calculations. The heavy metal weight and the weights of other materials of the fuel assembly are chosen to bound those for BWR fuel assemblies to give the highest possible values for neutron and gamma source strengths and decay heat.

Gamma radiation sources include 70 principal fission product nuclides within the spent fuel and several activation products and actinide elements present in the spent fuel and fuel assemblies. The gamma energy spectrum includes contributions for each source isotope as

calculated by ORIGEN 2 calculations. The total gamma source strength for BWR fuel is 4.86E15 Mev/s/MTHM (or 1.37E17 photons/second for 52 BWR fuel assemblies).

For the PWR fuel neutron source data and neutron spectrum were taken from previous ORIGEN 2 calculations; the results of which bound data from the Office of Civilian Radioactive Waste Management (OCRWM) database (Reference 62). Gamma ray sources were determined using the OCRWM database with the gamma spectrum determined using the Microshield computer program (Reference 63). The spectrum results were segmented into the 18 energy group structure used in the shielding calculations with the results normalized to preserve the total gamma power calculated in the OCRWM database. The total gamma source for PWR fuel is 5.81E15 Mev/s/MTHM (or 1.79E17 photons/second for 24 PWR fuel assemblies).

The neutron energy spectrum used for the shielding analysis is given in Table 7.2-1a of the SAR for PWR fuel and in Table 7.2-1b of the SAR for BWR fuel. The gamma energy spectrum used for shielding analysis is given in Table 7.2-2a of the SAR for PWR fuel and in Table 7.2-2b of the SAR for BWR fuel.

The shielding analysis used the same suite of computer codes as those used in the NUHOMS-24P Topical Report. These computer codes are: ORIGEN-2, ANISN (Reference 64), QAD-CGGP (Reference 65), MICROSKYSHINE, and MICROSHIELD. Collectively these codes were used to calculate both the gamma and neutron direct and scattered dose rates and, as previously discussed, the radiation source terms for spent fuel assemblies. All of the these computer codes have been used and benchmarked throughout the nuclear industry.

6.3 Discussion and Conclusions

The staff's review of the standardized NUHOMS system shielding calculations included a combination of reviewing the files provided by the applicant and performing independent check calculations on the files. There were no independent audit calculations of the dose rates since the applicant has demonstrated its proficiency in the application of these same methods and the validation and verification of these computer codes for previous ISFSI applications.

The check calculations of the shielding analysis files did not reveal any arithmetic and/or other numerical errors or indicate any changes to be made in the calculations. The calculated dose rates appear to be comparable to previously calculated dose rates. This conclusion also applies to the applicant's calculation of direct and air-scattered dose rates in and around the HSM. Dose rates at locations of interest were calculated for 5-year cooled PWR fuel and presented in Figure 7.3-2 of the SAR. The SAR states that "Consistent with the relative design basis source strengths, the shielding analysis results for the NUHOMS-24P envelop those of the NUHOMS-52B systems." The calculation packages submitted by the applicant presented sufficient information to support this assumption.

The applicant has performed an extensive number of shielding dose rate analyses for the standardized NUHOMS system design using a neutron and gamma ray source term for 4.0 wt% PWR fuel irradiated to 40,000 MWD/MTHM and cooled for a period of five years. This source term has been shown by the applicant to bound that calculated for 4.0 wt% BWR fuel irradiated to 35,000 MWD/MTHM and cooled for a period of five years. For both the PWR and BWR fuels the source terms were calculated to be conservative relative to the fuel types of possible concern. The PWR neutron source data and source spectra were calculated using the ORIGEN-2 computer code and the results were found to bound data from the OCRWM database. Gamma ray sources were taken from the OCRWM database with the gamma spectrum determined using the MICROSHIELD computer program. The computer codes and methods used to delineate the neutron and gamma sources for the standardized NUHOMS system design are acceptable.

Using the ANISN, QAD-CGGP, MICROSKYSHINE, and MICROSHIELD computer codes, the applicant calculated both direct and air-scattered dose rates in and around the HSM. These codes and methods have been previously used by this applicant and were reviewed and approved for the NUHOMS-24P Topical Report. The calculated dose rates presented for the standardized NUHOMS design appear to be consistent and conservative relative to previously presented results.

Independent calculations of the applicant's shielding analysis files did not reveal any arithmetic and/or other numerical errors or indicate any changes to be made in the calculations. Based on a detailed review of the inputs, methods, computer codes, assumptions and dose rate results, including calculational checks of the shielding analysis files, the shielding design analysis for the standardized NUHOMS system has been found to be acceptable and should be sufficient to meet the requirements of 10 CFR 72.104 and 10 CFR 72.106 as required by 10 CFR 72.236(d). In accordance with 10 CFR 72.212(b)(2), users must perform written evaluations to establish that these requirements have been met.

7.0 NUCLEAR CRITICALITY SAFETY EVALUATION

From the standpoint of criticality safety, the standardized NUHOMS system consists of two separate designs; one for the storage of 24 irradiated PWR fuel assemblies which is referred to as the standardized NUHOMS-24P design; and the one for the storage of 52 irradiated BWR fuel assemblies which is referred to as the standardized NUHOMS-52B design. Therefore the criticality safety evaluation of the two designs will be discussed separately.

7.1 Design Description

7.1.1 Standardized NUHOMS-24P Design

Criticality safety, according to the vendor, is ensured by the inherent geometry and material characteristics of the standardized NUHOMS-24P system and by establishing specific criteria for acceptance of irradiated fuel assemblies for storage. There is not a specific design feature such as fixed neutron poisons intended to provide assurance of nuclear criticality safety. The system is designed to provide nuclear criticality safety during both wet loading and unloading operations.

7.1.2 Standardized NUHOMS-52B Design

Criticality safety, according to the vendor, is ensured through a combination of geometrical and neutronic isolation of fuel assemblies. Fixed neutron absorbers in the form of borated stainless steel plates are used to control the reactivity of the assembly of stored BWR fuel assemblies such that criticality safety is assured under optimum moderation conditions for all initial fuel enrichments equal to or less than 4.0 wt.% U-235.

7.2 Design Evaluation

7.2.1 Standardized NUHOMS-24P Design

In addressing nuclear criticality safety for the standardized NUHOMS-24P design, the staff has applied criteria in 10 CFR 72.124 and 10 CFR 72.236(c). 10 CFR 72.124 provides that the system should be designed to be maintained subcritical and to ensure that, before a nuclear criticality accident is possible, at least two unlikely, independent, and concurrent or sequential changes occur. It states that the design of the system must include margins of safety for the nuclear criticality parameters that are commensurate with the uncertainties in the data and methods used in calculations. It calls for the design to demonstrate safety for the handling, packaging, transfer, and storage conditions, and in the nature of the immediate environment under accident conditions. It states that the design should be based on favorable geometry, permanently fixed neutron absorbing materials, or both. 10 CFR 72.236(c) requires that the cask must be designed and fabricated so that the spent fuel is maintained in a subcritical condition under credible conditions.

The design criteria proposed by the vendor in the SAR are that k_{eff}, remains below 0.95 during both normal operation and accident conditions. These design criteria were determined by the staff to be acceptable.

The criticality evaluation of the standardized NUHOMS system design was presented in SAR Section 3.3.3. The vendor performed criticality calculations to determine the most reactive fuel type and to show criticality safety of the standardized NUHOMS-24P system. According to the vendor, the B&W 15x15 fuel is the most reactive PWR fuel assembly and was selected as the design basis for the standardized NUHOMS-24P design.

The criticality safety analysis for the standardized NUHOMS-24P system presented in the SAR was performed using a calculational methodology consisting of several standard computer programs: The CASMO-2 (Reference 66) computer program was used to calculate the irradiated fuel actinide number density data as a function of burnup. The SAS2 (Reference 67) sequence in the SCALE-3 (Reference 60) criticality safety analysis code system was used to calculate the reactivity of the array of stored irradiated fuel assemblies. The SCALE-3 code system used in the analysis presented in the SAR was a mainframe version of the programs and included ORIGEN-S to perform fuel burnup, depletion, and decay calculations, and KENO-IV (Reference 68) code for criticality calculations. The cross sections used in the criticality safety analysis were the 123 group library from the SCALE system.

The KENO-IV code and the calculational methodology utilized to calculate k_{eff} was benchmarked against 40 critical experiments as presented in Section 3.3 of the SAR.

The criticality analysis presented in the SAR and supplementary response to requests for additional information were reviewed by the staff. Some independent and confirmatory calculations were also performed to verify important sensitivities in the criticality analysis.

7.2.2 Standardized NUHOMS-52B Design

For the standardized NUHOMS-52B design, the staff used the nuclear criticality safety criteria in 10 CFR 72.124 and 10 CFR 72.236(c). 10 CFR 72.124 provides that the system should be designed to be maintained subcritical and to ensure that, before a nuclear criticality accident is possible, at least two unlikely, independent, and concurrent or sequential changes occur. It states that the design of the system must include margins of safety for the nuclear criticality parameters that are commensurate with the uncertainties in the data and methods used in calculations. It provides that the design should demonstrate safety for the handling, packaging, transfer, and storage conditions, and in the nature of the immediate environment under accident conditions. It also provides that the design should be based on favorable geometry, permanently fixed neutron absorbing materials, or both. 10 CFR 72.236(c) requires that the cask must be designed and fabricated so that the spent fuel is maintained in a subcritical condition under credible conditions.

In order to address the criteria of 10 CFR 72.124(b), the staff has considered the following. The staff used the bounding neutron flux of the 52B spent fuel and calculated the reaction rate from thermal neutron absorption in boron and then evaluated this rate for a 20-year storage life. The result of this calculation is a maximum depletion of boron of approximately 0.04% for 20 years, which is small compared to the design tolerance of the absorber material and can therefore be considered insignificant. Aside from this boron depletion mechanism due to thermal neutron absorption in boron, the staff has not postulated other mechanisms which could reduce the efficacy of the fixed neutron absorber.

The design criteria proposed by the vendor in the SAR are that k_{eff}, remains below 0.95 during both normal operation and accident conditions for optimum moderation density. These design criteria were determined by the staff to be acceptable.

The criticality evaluation of the standardized NUHOMS-52B design was presented in SAR Section 3.3.3. The vendor performed criticality calculations to determine the most reactive fuel type and to show criticality safety of the standardized NUHOMS-24P design. According to the vendor, the GE-2 7x7 fuel is the most reactive BWR fuel assembly and was selected as the design basis fuel for the standardized NUHOMS-52B.

The criticality safety analysis for the standardized NUHOMS-52B design presented in the SAR was performed with a calculational methodology using the microcomputer application KENO-Va (Reference 69) and the Hansen-Roach 16 group cross section working library. A small computer program, designated PN-HET, was developed by the vendor to automate the computation of resonance parameters necessary for mixing the Hansen-Roach cross sections.

The KENO-Va/PN-HET code system was benchmarked against 40 critical experiments as presented in a separate computer code QA verification document, KENO5A-QA (Reference 70).

The criticality analysis presented in the SAR and supplementary response to requests for additional information were reviewed by the staff. Some independent and confirmatory calculations were also performed to verify important sensitivities in the criticality analysis.

7.3 Conclusions

7.3.1 Standardized NUHOMS-24P Design

On the basis of the analysis presented in the SAR, the supplementary analysis presented in response to questions, and confirmatory calculations performed by the staff, it was determined that the standardized NUHOMS-24P design and proposed operating procedures are adequate to maintain the system in a subcritical configuration and to prevent a nuclear criticality accident, and therefore satisfy 10 CFR 72.124 and 10 CFR 72.236(c), subject to the key factors assumed by the vendor in the analysis. Specifically:

1. Criticality safety calculations presented in the SAR and independent confirmatory calculations performed by the staff show that criticality safety is ensured for a maximum U-235 initial enrichment equivalent to 1.45 wt.% which was determined for the design basis B&W 15x15 fuel assemblies.

2. The criticality safety analysis of the misloading of unirradiated fuel assemblies presented in the SAR and independent confirmatory calculations performed by the staff show that the array reactivity can be maintained subcritical ($k_{eff} < 0.95$) in this accident situation by filling the DSC with borated water before wet loading or unloading. The minimum level of boration required as determined by the staff analysis, based on 4.0 wt.% enrichment of unirradiated B&W 15x15 fuel assemblies was determined to be 2,000 ppm. The analysis presented in the SAR determined the minimum level of boration to be 1,810 ppm. In lieu of resolution of the difference between the staff and SAR analysis of the required minimum level of boration, the more conservative value of the staff analysis is taken. The SAR assumed that the B&W 15x15 fuel presents a bounding case.

The key factors and assumptions used by the vendor in the criticality safety analysis are as follows:

1. The maximum initial fuel enrichment evaluated for irradiated fuel assemblies is 4.0 wt.% U-235.

2. The DSC is filled with borated water during fuel loading and unloading operations. The required boron concentration is determined for maximum fuel enrichment.

3. Only irradiated fuel assemblies with an initial enrichment equivalent < 1.45 wt.% U-235 will be loaded into the DSC. The criticality acceptability curve of minimum burnup versus enrichment is shown in Figure 3.3-3 of the SAR.

4. Fuel assemblies are no more reactive than the design basis 15 x 15 rod array.

5. Accidents resulting in altered mechanical configuration of the array of fuel assemblies are not credible.

6. Accidents during dry storage that result in the flooding of the DSC with unborated water are not credible.

Key factors 1, 2, 3, and 4 are reflected in the fuel specification discussed in Section 12.2.1.

Previous evaluation of vendor topical reports and site-specific applications involving casks with large number of assemblies (e.g., 24) have addressed the potential for criticality when

water is added to the cask or canister before fuel removal. Because NRC staff position does not yet allow for burnup credit, the past analyses have assumed a full load of fresh fuel and considered the case for optimum moderation. These analyses have been the limiting cases for nuclear criticality safety. Minimum boron concentration in the DSC cavity water, during wet loading and unloading operations, is discussed as a condition for system use in Section 12.2.15.

7.3.2 Standardized NUHOMS-52B Design

The conclusions of the analysis of the standardized NUHOMS-52B design are more straightforward since the standardized NUHOMS-52B system is designed to provide assurance of nuclear criticality safety under optimum moderation conditions for loading of unirradiated fuel assemblies of a maximum enrichment of 4.0 wt.% U-235. This simplification is due to the use of fixed neutron absorbers in the design. The initial SAR also requested certification of a low-enrichment design which contained no neutron absorber plates but limited the initial fuel enrichment. Independent criticality safety calculations performed by the staff did not confirm that criticality safety was ensured in this low enrichment design. The vendor has withdrawn the low-enrichment design from further consideration.

On the basis of the analysis presented in the SAR and subsequent revisions, and independent confirmatory calculations performed by the staff, it was determined that the standardized NUHOMS-52B system design and proposed operating procedures are adequate to maintain the system in a subcritical configuration and to prevent a nuclear criticality accident, and therefore satisfy 10 CFR 72.124 and 10 CFR 72.236(c), subject to the key factors assumed by the vendor in the analysis. Specifically:

1. Criticality safety calculations presented in the SAR and independent confirmatory calculations performed by the staff show that criticality safety is ensured for a maximum initial U-235 fuel enrichment of 4.0 wt.% which was determined for the design basis GE-2 7x7 fuel assembly.

2. The criticality safety analysis assumes a minimum boron density of 0.75 wt% boron in the borated stainless steel absorber plates.

The key factors and assumptions used by the vendor in the criticality safety analysis are as follows:

1. The maximum initial fuel enrichment of fuel assemblies stored in the standardized NUHOMS-52B system is 4.0 wt.% U-235.

2. The boron loading in the neutron absorber plates is a minimum of 0.75 wt.%.

4. Accidents resulting in an altered mechanical configuration of the array of fuel assemblies are not credible.

Key factors 1, 2, and 3 are reflected in the fuel specification discussed in Section 12.2.1.

8.0 RADIOLOGICAL PROTECTION EVALUATION

8.1 Design Description

The main radiation protection features of the standardized NUHOMS system design are described in Sections 7.1.2 and 7.3 of the SAR and include: (1) radiation shielding; (2) radioactive material confinement; (3) prevention of external surface contamination; and (4) site access control.

Shielding includes many features designed to reduce direct and scattered radiation exposure, including:

1. Thick concrete walls and roof on the HSM which limit the dose rate to site workers and the off-site population;

2. A thick shield plug on each end of the DSC to reduce the dose to workers performing drying and sealing operations, and during transfer of the DSC in the transfer cask and storage in the HSM;

3. Use of a shielded transfer cask for DSC handling and transfer operations which limits the dose rate to ISFSI and plant workers;

4. Filling of the DSC cavity and the DSC-transfer cask annulus with water during DSC closure operations to reduce direct and scattered radiation exposure ; and

5. Use of temporary shielding during DSC draining, drying, inerting and closure operations as necessary to further reduce direct and scattered radiation dose rates.

The confinement features of the standardized NUHOMS system control the release of gaseous or particulate radionuclides and are described in Section 3.3.2. These features include:

1. The cladding of the stored fuel assemblies, which provides the first level of confinement;

2. The DSC confinement pressure boundary which provides the second level of confinement. The DSC confinement boundary includes: the DSC shell, the inner seal weld primary closure of the DSC, the DSC shielded end plugs, the outer seal weld secondary closure of the DSC, and the DSC cover plates.

The DSC has been designed as a weld-sealed containment pressure vessel with no mechanical or electrical penetrations. All the DSC pressure boundary welds are inspected according to the appropriate articles of the ASME B&PV Code, Section III, Division 1, Subsection NB

(Reference 9). These criteria ensure that the weld metal is as sound as the parent metal. As pointed out in the description of the DSC in Section 3.2.1, the double seal welds at the top and bottom of the DSC do not comply with the ASME Code. Consequently, the weld inspection requirements are also not strictly in accordance with Section NB-5000 of the Code. The staff has accepted alternative inspection and test requirements in lieu of the Code.

Contamination of the DSC exterior and transfer cask interior surfaces is controlled by placing demineralized water in the transfer cask and DSC during loading operations, then sealing the DSC/cask annulus. In addition, surface contamination limits for the DSC have been established, and are discussed in Section 9.2.

Access to the site of the NUHOMS ISFSI would be restricted by a periphery fence to comply with 10 CFR 72.106(b) controlled area requirements. The details of the access control features will vary from site to site, but must meet the requirements of 72.106(b) for the access to the controlled area. In addition to the controlled area restrictions, access to the spent fuel is restricted by an HSM access door, which is welded in place. This door weighs approximately 2.7 t (3 tons) and would require heavy equipment for removal.

8.2 Design Evaluation

This section evaluates the radiation protection features of the standardized NUHOMS design separately with regard to (1) on-site occupational exposures under normal loading and storage conditions, and (2) off-site exposures under normal storage conditions and in the event of accidents.

8.2.1 On-Site Radiological Protection

Regulatory requirements for on-site radiological protection are contained in 10 CFR 20.1101 and 20.1201-1208 which require the licensee to provide the means for controlling and limiting occupational radiation exposures within the limits given in 10 CFR Part 20 and for meeting the objective of maintaining exposures as low as is reasonably achievable (ALARA).

Section 20.1201(a) of 10 CFR Part 20 states that the licensee shall control the occupational dose to individual adults to the dose limits specified in 1201(a)(1) and 1201(a)(2). Also, section 20.1101 of 10 CFR Part 20 states that each licensee shall develop, document, and implement a radiation protection program and that the licensee shall use, to the extent practical, procedures and engineering controls based upon sound radiation protection principles to achieve occupational doses and doses to members of the public that are as low as is reasonably achievable (ALARA).

Section 72.126(a) provides that radiation protection systems shall be provided for all areas and operations where on-site personnel may be exposed to radiation or airborne radioactive materials.

Guidance for ALARA considerations is also provided in NRC Regulatory Guides 8.8 and 8.10 (References 10 and 11).

Radiation protection for on-site personnel is considered acceptable if it can be shown that the non-site-specific considerations (1) will maintain occupational radiation exposures at levels which are ALARA, (2) are in compliance with appropriate guidance and/or regulations, and (3) will ensure that the dose from associated activities to any individual does not exceed the limits of 10 CFR Part 20.

The calculational methods used in the estimation of on-site doses are described in detail in the SAR. These methods focused on the use of the ANISN, QAD-CGGP, MICROSKYSHINE, and MICROSHIELD (References 64, 65, and 63, respectively) radiation transport codes, as well as manual calculations, to calculate exposure rates around the DSC in a transfer cask and an HSM. Dose rate maps in the general vicinity of a 2x10 array and two 1x10 arrays containing 10-year-old fuel were constructed.

The calculational methods and results presented in the SAR and associated calculation packages were reviewed for completeness, correctness, and internal consistency. In addition, confirmatory calculations were performed for the gamma-ray dose rates at various locations around the DSC, TC, and HSM.

Radiation doses to on-site workers were not calculated in the SAR. Rather, a summary of the operational procedures which lead to occupational exposures are presented, as are the number of personnel required, the estimated time for completion, and the average source-to-subject distance. This information can be used with dose map results to assess the individual and collective on-site doses.

The SAR notes that experience with an operating standardized NUHOMS system has shown that the collective occupational dose associated with placing a canister of spent fuel into dry storage is less than 0.014 person-Sv (1.4 person-rem), and that the application of effective procedures by experienced ISFSI personnel can reduce the collective dose to below 0.01 person-Sv (1 person-rem) per canister. A detailed assessment of operator doses and the possible provision of management or administrative controls to meet ALARA criteria is the responsibility of the user in accordance with its 10 CFR Part 50 licensee's radiation protection program and 10 CFR Part 20.

Other workers at the nuclear power plant site will also be exposed to direct and air-scattered (skyshine) radiation during the transfer and storage phases of ISFSI operation. Examples of activities involving such exposure are surveillance of the HSMs, and site operations which are not associated with spent fuel storage but which are performed in the general vicinity of the storage area. Major factors influencing the magnitude of the exposures are the occupancy times and spatial distribution of workers, and the intensity of the radiation field. An assessment of the expected on-site doses incurred by site personnel not directly involved

in ISFSI operations is the responsibility of the user in accordance with its 10 CFR Part 50 licensee's radiation protection program and 10 CFR Part 20.

8.2.2 Off-Site Radiological Protection

8.2.2.1 Normal Operations

Regulatory requirements for off-site radiological protection in 10 CFR Part 20 require that dose to members of the public should be kept within the limits of 20.1301 and should be ALARA. Section 72.104(a) of 10 CFR Part 72 requires that during normal operations and anticipated occurrences, the annual dose equivalent to any real individual located beyond the controlled area shall not exceed 0.25 mSv (25 mrem) to the whole body, 0.75 mSv (75 mrem) to the thyroid, and 0.25 mSv (25 mrem) to any other organ as a result of exposure to (1) planned discharges of radioactive materials (except for radon and its daughter products) to the general environment, (2) direct radiation from ISFSI operations, and (3) any other radiation from uranium fuel cycle operations within the region.

Off-site radiological protection features of the standardized NUHOMS system are considered acceptable if it can be shown that design and operational considerations, which are not site-specific, result in off-site dose consequences in compliance with the applicable sections of 10 CFR Parts 20 and 72, and that these doses to off-site individuals are ALARA.

The two principal design features which limit off-site exposures during normal operations are the confinement features of the double-seal welded DSC, and the radiation shielding of the DSC and the HSM. During transfer operations, shielding in the radial direction is provided by the transfer cask. The confinement features of the DSC control the release of gaseous or particulate radionuclides. There are no liquid effluents from the ISFSI. During normal operations, the only pathway of exposure to the off-site population is direct and scattered radiation from the stored fuel.

The review for off-site radiological protection mainly involved a detailed evaluation of the methods applied and the results obtained in the applicable SAR sections, supplemented by additional information (including detailed calculation packages) provided by the applicant on these methods and results. For the case of off-site doses from direct and scattered (or "skyshine") radiation, an evaluation was performed on the application of MICROSKYSHINE, MICROSHIELD, and manual calculation methods, which were used to calculate gamma-ray and neutron dose equivalent rates at various locations in and around the HSM and to construct a dose-versus-distance curve. The dose rates predicted by this curve for various off-site distances was used to assess the general level of compliance with the dose rate criteria of 10 CFR 72.104(a) and for 10 CFR Part 20.

The dose to an off-site individual residing at some distance from a filled standardized NUHOMS system array will vary depending on a number of factors, including fuel type, size, and geometry of the array, and the directional orientation of the receptor with respect to

the array. A conservative estimation of the distance required to reduce the full-time occupancy dose rate from a filled ISFSI array to 0.25 mSv/yr (25 mrem/yr) is approximately 300 meters. Normal operation of a standardized NUHOMS HSM would comply with the dose rate criteria of 10 CFR 72.104(a), provided site-related factors allow for a sufficient distance to the controlled area boundary. As required by 10 CFR 72.212(b)(2)(iii), this must be evaluated by the user before storing fuel in a standardized NUHOMS system ISFSI.

8.2.2.2 Off-Normal Operations

Section 72.106(b) requires that any individual located on or near the closest boundary of the controlled area (at least 100 m) shall not receive a dose greater than 0.05 Sv (5 rem) to the whole body or any organ from any design basis accident.

Off-normal events and postulated accidents that could result in the loss of shielding or the release of radionuclides are analyzed in Sections 8.1 and 8.2 of the SAR. In particular, an accident resulting in an instantaneous release of 30 percent of fission gas inventory (mainly Kr-85) is assessed in Section 8.2.8. The SAR reports that this accident results in a dose at 300 meters from the ISFSI site of 0.53 mSv (0.053 rem) to the whole body and 0.067 Sv (6.7 rem) to the skin. These results were confirmed by independent calculations.

The dose to the whole body is well within the 0.05 Sv (5 rem) limit prescribed by 10 CFR 72.106(b). The calculated skin dose exceeds this limit by a small amount, although the conservative, generic nature of the assessment warrants that the DSC leakage event be further assessed for site-specific applications. It should also be noted that, as indicated in the SAR, no credible conditions have been identified which could breach the canister body or fail the double-seal welds at each end of the DSC. Thus, these dose results are only presented to bound the consequences that could conceivably result, and to evaluate compliance with the 10 CFR 72.106(b) requirement.

Other accidents are assessed in Section 8.2 (e.g., floods, tornados, earthquakes, accidental cask drop, blockage of air inlets and outlets, etc.), but the SAR concludes that none of these other accidents represent credible sources of off-site dose consequences.

8.3 Discussion and Conclusions

8.3.1 On-site Radiological Protection

The shielding, confinement, and handling design features of the standardized NUHOMS design conform to the on-site radiological protection requirements of 10 CFR Part 20 and are considered acceptable for the set of conditions assumed in this review. Dose rates calculated by the vendor for different locations around the standardized NUHOMS system design are significantly higher than those determined for previous NUHOMS designs. This is specifically reflected in the dose rate limits delineated in Operating Limit 12.2.7 of this SER.

Although independent review analyses and more exact dose calculation methods may result in lower dose rates, the relative dose rates for this design are still expected to be higher than comparably calculated dose rates for earlier NUHOMS designs. These relatively higher dose rates are not consistent with the objective of maintaining occupational exposures ALARA. Site-specific applications with this design should provide detailed procedures and plans to meet ALARA guidelines and 10 CFR Part 20 requirements with respect to the operation and maintenance of this standardized NUHOMS system ISFSI design. As discussed above, details of access control, surveillance, and other operational aspects affecting on-site exposure must be in compliance with existing licensee's radiation protection program.

8.3.2 Off-site Radiological Protection

The shielding and confinement design features of the standardized NUHOMS system design conform to the off-site radiological protection requirements of 10 CFR Part 72 and 10 CFR Part 20 and are considered acceptable for the set of conditions assumed in this review. The use of high-integrity double-seal welds on the DSC ensures that, during normal operation, there are no effluents from the standardized NUHOMS system. Off-site dose is, therefore, due strictly to direct and scattered radiation, the intensity of which is a function of distance and direction from the array. Site-specific factors such as the number of HSMs in the storage array, the distance and direction of the nearest boundary of the controlled area, the contribution of reactor plant effluents to the off-site dose, and resultant collective off-site dose must be considered in the compliance evaluation for a proposed standardized NUHOMS system at a specific site. This evaluation must be performed by each user to assure compliance with 10 CFR 72.212 and 10 CFR 20.1207. This requirement is contained in the conditions for system use in Section 12.2.18 of this SER.

9.0 DECOMMISSIONING/DECONTAMINATION EVALUATION

9.1 Design Description

The standardized NUHOMS system design recognizes the need for decommissioning at the end of its useful life. External contamination of the DSC is limited by its containment features and through the contamination control procedures used during DSC fuel loading. In particular, contamination levels on the external surface of the DSC are minimized by the use of uncontaminated water in the DSC and cask/DSC annulus during fuel pool loading operations. This prevents contaminated fuel pool water from contacting the DSC exterior. Also, there is no credible chain of events which would result in widespread contamination outside of the DSC.

The SAR also states that the DSC is designed to interface with a transportation system planned to transport canistered intact fuel assemblies (i.e., filled DSC's) to either a monitored retrievable storage facility (MRS) or a geologic repository. Until the transportation system is available, the DSCs are not approved at this time for transportation. If the fuel must be removed from the DSC at the reactor site before shipment, the DSC will likely require decontamination of the internal surfaces and disposal as low-level radioactive waste. Once the DSC's have been removed, only small amounts of residual contamination are expected to remain in the HSM passages, thereby facilitating easy decommissioning.

9.2 Design Evaluation

Section 72.130 of 10 CFR Part 72 provides criteria for decommissioning. It provides that considerations for decommissioning should be included in the design of an ISFSI and that provisions be incorporated to (1) decontaminate structures and equipment; (2) minimize the quantity of waste and contaminated equipment; and (3) facilitate removal of radioactive waste and contaminated materials at the time of decommissioning. Although 10 CFR 72.130 does not provide specific criteria for acceptance, the ISFSI must be designed for decommissioning. Therefore, the standardized NUHOMS system design has been reviewed against good nuclear engineering practices which include (1) means to control the spread of contamination and (2) a design which facilitates decontamination.

Section 72.30 of 10 CFR Part 72 defines the need for a decommissioning plan which includes financing. Such a plan, however, is not considered applicable to this review. The cost of decommissioning the ISFSI must be considered in the overall cost of decommissioning the reactor site. 10 CFR 72.236(i) requires that the cask be designed to facilitate decontamination to the extent practicable.

The standardized NUHOMS design places heavy reliance on the prevention of contamination on the outer surface of the DSC. If these levels are kept low, very little contamination will exist on the inner surfaces of the HSMs, and ease of decommissioning will be facilitated. Section 10.3.14 of the SAR specifies a limiting condition for operation (LCO) for smearable

(non-fixed) surface contamination levels on the outer surface of the DSC. This specification states that smearable contamination levels shall be less than 36.5 Bq/100 cm^2 (2200 dpm/100 cm^2) (10^{-5} $\mu Ci/cm^2$) for beta-gamma emitters and 3.65 Bq/100 cm^2 (220 dpm/100 cm^2) (10^{-6} $\mu Ci/cm^2$) for alpha-emitting radionuclides. This specification corresponds to surface removable contamination limits in 10 CFR 71.87(i)(1).

The surveillance requirement for this LCO is to determine the contamination levels of the DSC by taking surface contamination surveys of the upper one foot of the DSC exterior while the DSC is in the transfer cask before making the first closure weld. This survey can be used as a representative sample of the DSC body. If the specified limits are exceeded, the annular space between the DSC and transfer cask will be flushed with demineralized water until the contamination levels are within these limits. By minimizing DSC contamination, the potential contamination of the internal surfaces of the HSM is kept to a minimum.

The design of the standardized NUHOMS system is based on the intended eventual disposal of each DSC following fuel removal. However, it is also possible that the DSC shell/basket assembly could be reused. Such an alternative would be dependent on economic and regulatory conditions at the time of fuel removal.

At this time, it is not known whether demolition and removal of the HSM can be performed by conventional methods. Uncertainty exists with respect to (1) the specific levels of contamination that might exist on the inner surfaces of the HSM and (2) contamination level criteria which will govern whether the HSMs can be disposed of as low-level radioactive waste or as ordinary rubble. The staff also notes that decommissioning of the DSC's, transfer cask, and other equipment are matters which will be properly addressed in site-specific decommissioning plans.

9.3 Conclusions

The staff concludes that adequate attention has been paid to decommissioning in the design of the standardized NUHOMS system considering the current state of knowledge.

The staff also acknowledges that decommissioning considerations are sometimes in conflict with other requirements. The reinforced structure of the HSM, for example, will require considerable effort to demolish. Although it is not likely that significant contamination can spread beyond the DSC, demolition of the HSM may generate slightly contaminated dust. However, the staff concurs that primary concern in such cases rests with operational safety considerations, and ease of decommissioning is a secondary consideration.

A specification is proposed by the vendor for maximum DSC exterior surface contamination in SAR Section 10.3.14. The primary reason for requiring a clean exterior surface of the DSC is to reduce the total amount of activity as a source of potential contamination for the TC and HSM interior surfaces. The SER includes this condition for system use in Section 12.2.12 of this report.

10.0 QUALITY ASSURANCE

Chapter 11.0,[1] "Quality Assurance," of Revision 2 of the Pacific Nuclear Fuel Services Group Certification Safety Analysis Report (SAR) for a general license in accordance with Subpart K of 10 CFR Part 72 describes the PNFS quality assurance program. The PNFS quality assurance program is applied to structures, systems, and components of the NUHOMS independent spent fuel storage system important to safety. Chapter 11.0 addresses each of the 18 quality assurance criteria of 10 CFR Part 72, Subpart G, "Quality Assurance," and it includes the commitment that PNFS will implement the quality assurance program controls described in Revision 1 of the VECTRA Quality Assurance Manual dated July 22, 1994. This manual has been reviewed and accepted by the NRC.

Chapter 11.0 of the SAR describes the graded quality assurance program that is applied by PNFS to the structures, systems, and components of the NUHOMS spent fuel storage system based on that structure, system, or component's importance to safety. Chapter 11 defines three quality categories (or levels of quality/quality assurance) for items important to safety, and there are some items that are not important to safety. Chapter 11 of the SAR describes the differences between the quality assurance program for each category. It also lists the quality category of each structure, system, and component of the NUHOMS spent fuel storage system.

The staff has reviewed PNFS's quality assurance program description given and referenced in Chapter 11.0 of the SAR.[2] The staff finds that the PNFS commitments meet the requirements of Subpart G of 10 CFR Part 72 and are, therefore, acceptable for the issuance of a general Certificate of Compliance in accordance with Subpart L of 10 CFR Part 72.

---

1 SAR pages 11.1-1 through 11.3-5 identified as NUH-003, Revision 2, November 5, 1993.

2 The acceptance criteria for quality assurance for independent spent fuel storage installations, based on Subpart G of 10 CFR Part 72, is given in the Fuel Cycle Safety Branch (Currently the Storage and Transport Systems Branch) Technical Position of June 20, 1986.

11.0 OPERATIONS, MAINTENANCE, TESTING, AND RECORDS

11.1 Operations

10 CFR 72.234(f) requires as a condition of approval of the Certificate of Compliance that: "the cask vendor [PNFS] shall ensure that written procedures and appropriate tests are established before use of the casks. A copy of these procedures and tests must be provided to each cask user." Regulatory Guide 3.48, Section 9 (Reference 5) describes the information to be incorporated in operating procedures for loading, unloading, and preparation of the cask. For the Certificate of Compliance for the standardized NUHOMS system, the term "cask" in 10 CFR Part 72, Subpart L, and in Regulatory Guide 3.48 is applied to the full NUHOMS System.

Procedures described in the SAR were reviewed and evaluated as part of the staff preparation of this SER. Procedures for loading the DSC are in SAR paragraphs 5.1.1.2 through 5.1.1.6 and are summarized graphically in SAR Figure 5.1-1. These include descriptions of recommended procedures for loading, use of fluids to fill cavities, removal of moisture, sealing, on-site management, and placing and sealing in storage positions.

Procedures for unloading the DSC are in SAR paragraphs 5.1.1.8 and 5.1.1.9 and are graphically summarized in SAR Figure 5.1-2. These include descriptions, tests, special preparations for unloading, unsealing, removal of DSC and on-site transfer, opening, removal of IFAs and cask decontamination.

Procedures for preparation of the TC and DSC for use are in SAR paragraph 5.1.1.1 and are part of the graphical summarization in SAR Figure 5.1-1. These include descriptions of inspections, tests, and special preparations of the TC and DSC necessary to ensure that they are properly loaded, closed, decontaminated, and transferred.

Staff review of the procedures included in the SAR indicates that they are acceptable and are in full compliance with the requirements of 10 CFR 72.234(f) for written procedures and with the guidance of Regulatory Guide 3.48, Section 9, for descriptions of operating procedures. These descriptions provide adequate bases for users to develop more detailed written procedures to follow during cask operations.

11.2 Maintenance

10 CFR 72.234 (a) requires as conditions of approval of the Certificate of Compliance that maintenance must comply with the requirements of 10 CFR 72.236 which require that the "cask must be designed to store spent fuel safely for a minimum of 20 years and permit maintenance as required." Regulatory Guide 3.48, Section 9.4, provides guidance on description of the maintenance program. The staff based evaluation of the SAR descriptions of maintenance on the 10 CFR Part 72, Subpart L, requirements and Regulatory Guide 3.48 guidance.

The SAR describes maintenance for the standardized NUHOMS system in paragraph 5.1.3.5 which states that, as the system is totally passive, it does not require maintenance. To ensure that the ventilation airflow is not interrupted, the HSM is to be periodically inspected to ensure that no debris is in the airflow inlet or outflow openings. SAR Section 5.1.1.7 describes these monitoring operations.

The TC is expected to be maintained and prepared in accordance with the procedure for each DSC IFA loading, transfer, loading into the HSM cycle, and for the unloading process. A single TC may be used at a site. SAR Section 4.5 describes recommended procedures for inspection, maintenance, and repair of the TC.

Staff review of the provisions for and descriptions of maintenance included in the SAR indicates that they are acceptable and are in full compliance with the requirements of 10 CFR Part 72, Subpart L, and the guidance of Regulatory Guide 3.48.

11.3 Testing

10 CFR 72.234(a) requires as conditions of approval of the Certification of Compliance that testing must comply with the requirements of 10 CFR 72.236. 10 CFR 72.234(f) requires that the cask vendor ensure appropriate tests are established before use of the "casks" and that a copy of the tests must be provided to each user. 10 CFR 72.236(j) requires that the "cask must be inspected to ascertain that there are no cracks, pinholes, uncontrolled voids, and other defects that could significantly reduce its confinement effectiveness." 10 CFR 72.236(l) requires that "the cask and its systems important to safety must be evaluated by appropriate test or by other means acceptable to the Commission, to demonstrate that they will reasonably maintain confinement of radioactive material under normal, off-normal, and credible accident conditions." Regulatory Guide 3.48, Section 9, provides guidance on describing tests in the SAR.

Descriptions of and requirements for testing in conjunction with fabrication of the standardized NUHOMS system components are included in the SAR. Descriptions of tests and inspections associated with preparation for loading and loading operations are included in SAR Sections 5.1.1.1 through 5.1.1.6. Inspections in conjunction with downloading operations are described in SAR Section 5.1.1.9. Instruments to be used during loading operations and their functions are listed in SAR Table 5.1-1. No instruments or control systems are used during the storage cycle due to the passive nature of the standardized NUHOMS system (SAR Section 5.4).

Recommended pre-operational testing is described in SAR Section 9.2. This includes the test program description and discussion. Recommended testing is also included in SAR Section 10, Operating Controls and Limits. These include:

- DSC pressure during drying and backfill (SAR Sections 10.3.2 and 10.3.3).
- Tests of DSC inner seal and closure welds (SAR Sections 10.3.4 and 10.3.5).

- HSM dose rates with DSC in storage (SAR Section 10.3.7).
- HSM temperature rise with DSC in place (SAR Section 10.3.8).
- TC dose rates (SAR Section 10.3.12).
- DSC surface contamination (SAR Section 10.3.14).
- Ambient temperatures before TC use for DSC transport (SAR Section 10.3.15).

Staff review of the provisions for and descriptions of testing included in the SAR indicates that they are acceptable and are in full compliance with the requirements of 10 CFR Part 72, Subpart L, and the guidance of Regulatory Guide 3.48.

11.4 Records

10 CFR 72.234(d) requires that the cask vendor ensure a record is established and maintained for each cask fabricated under the NRC Certificate of Compliance and describe the information to be included on the record. The SAR does not explicitly identify the information record specified in 10 CFR 72.234(d). The only statement is that, "The ISFSI records should be maintained by the licensee in accordance with the requirements in 10 CFR Part 72 and with the existing plant records retention practices." As the 10 CFR 72.234(d) requirement is placed on the vendor, regardless of the location where the records are maintained, the staff considers that the required assurance is not met in the SAR.

The required record does not require any data from the "cask" user other than name and address. The remaining data relates to cask fabrication and the Certificate of Compliance. Specifically, the data required to be recorded and maintained for each "cask" by the vendor VECTRA are [10 CFR 72.234(d)(2)]:

"(i) The NRC Certificate of Compliance number;
(ii) The cask model number; [The model number should be marked on each HSM, DSC and TC.]
(iii) The cask identification number; [A unique identification number should be marked on each HSM, DSC and TC.]
(iv) Date fabrication was started;
(v) Date fabrication was completed;
(vi) Certification that the cask was designed, fabricated, tested, and repaired in accordance with a quality assurance program accepted by NRC;
(vii) Certification that inspections required by paragraph 72.236(j) were performed and found satisfactory; and
(viii) The name and address of the cask user."

The data marked on the DSC and TC are among those required by 10 CFR 72.236(k) which requires that the data be conspicuously and durably marked and also include the empty weight. The staff considers that the HSM and its included DSC support assembly are important to safety; therefore, maintaining a record and marking the individual HSM would be consistent with the intent of Subpart L.

12.0 CONDITIONS FOR SYSTEM USE

This section presents the conditions which a potential user (general licensee) of the standardized NUHOMS system must comply with, in order to use the system under a general license that is issued according to the provisions of 10 CFR 72.210 and 10 CFR 72.212. These conditions have either been proposed by the system vendor, imposed by the NRC staff as a result of the review of the SAR, or are part of the regulatory requirements expressed in 10 CFR 72.212.

12.1 General Requirements and Conditions

12.1.1 Regulatory Requirements for a General License

Subpart K of 10 CFR Part 72 contains conditions for using the general license to store spent fuel at an independent spent fuel storage installation at power reactor sites authorized to possess and operate nuclear power reactors under 10 CFR Part 50. Technical regulatory requirements for the licensee (user of the standardized NUHOMS system) are contained in 10 CFR 72.212(b).

10 CFR 72.212(b)(2) requires that the licensee perform written evaluations, before use, that establish that: (1) conditions set forth in the Certificate of Compliance have been met; (2) cask storage pads and areas have been designed to adequately support the static load of the stored casks; and (3) the requirements of 10 CFR 72.104 "Criteria for radioactive materials in effluent and direct radiation from an ISFSI or MRS," have been met. 10 CFR 72.212(b)(3) requires that the licensee review the SAR and the associated SER, before use of the general license, to determine whether or not the reactor site parameters (including earthquake intensity and tornado missiles), are encompassed by the cask design bases considered in these reports.

10 CFR 72.212(b)(4) provides that, as a holder of a Part 50 license, the user, before use of the general 10 CFR Part 72 license, must determine whether activities related to storage of spent fuel involve any unreviewed safety issues, or changes in technical specifications as provided under 10 CFR 50.59. Under 10 CFR 72.212(b)(5), the general license holder shall also protect the spent fuel against design basis threats and radiological sabotage pursuant to 10 CFR 73.55. Other general license requirements dealing with review of reactor emergency plans, quality assurance program, training, and radiation protection program must also be satisfied pursuant to 10 CFR 72.212(b)(6). 10 CFR 72.212(b)(7), (8), (9) and (10) describe record and procedural requirements for the general license holder.

Without limiting the requirement identified above, site-specific parameters and analyses, identified in the SER, that will need verification by the system user, are as a minimum, as follows:

1. The temperature of 21°C (70°F) as the maximum average yearly temperature with solar incidence. The average daily ambient temperature shall be 37.8°C (100°F) or less (Reference SER Section 2.4.1).

2. The temperature extremes of 52°C (125°F) with incident solar radiation and -40°C (-40°F) with no solar incidence (Reference SER Section 2.4.1) for storage of the DSC inside the HSM.

3. The horizontal and vertical seismic acceleration levels of 0.25g and 0.17g, respectively (Reference SER Table 2-4).

4. The analyzed flood condition of 4.6 m/s (15 fps) water velocity and a height of 15.2 m (50 feet) of water (full submergence of the loaded HSM DSC) (Reference SER Table 2-4).

5. The potential for fire and explosion should be addressed, based on site-specific considerations (See SER Table 2-4 and related SER discussion).

6. The HSM foundation design criteria are not included in the SAR. Therefore, the nominal SAR design or an alternative should be verified for individual sites in accordance with 10 CFR 72.212(b)(2)(ii). Also, in accordance with 10 CFR 72.212(b)(3), the foundation design should be evaluated against actual site parameters to determine whether its failure would cause the Standardized NUHOMS systems to exceed the design basis accident conditions.

7. The potential for lightning damage to any electrical system associated with the standardized NUHOMS system (e.g., thermal performance monitoring) should be addressed, based on site-specific considerations (See SER Table 2.4 and related SER discussion).

8. Any other site parameters or consideration that could decrease the effectiveness of csk systems important to safety.

In accordance with 10 CFR 72.212(b), a record of the written evaluations must be retained by the licensee until spent fuel is no longer stored under the general license issued under 10 CFR 72.210.

12.1.2 Operating Procedures

Written operating procedures shall be prepared for cask handling, loading, movement, surveillance, and maintenance. The operating procedures suggested generically in the SAR were considered appropriate as discussed in Section 11.0 of the SER and should provide the basis for the user's written operating procedure. The following additional procedure requested by NRC staff in Section 11.3 should be part of the user operating procedures:

If fuel needs to be removed from the DSC, either at the end of service life or for inspection after an accident, precautions must be taken against the potential for the presence of damaged or oxidized fuel and to prevent radiological exposure to personnel during this operation. This can be achieved with this design by the use of the purge and fill valves which permit a determination of the atmosphere within the DSC before the removal of the inner top cover plate and shield plugs. If the atmosphere within the DSC is helium, then operations should proceed normally with fuel removal either via the transfer cask or in the pool. However, if air is present within the DSC, then appropriate filters should be in place to preclude the uncontrolled release of any potential airborne radioactive particulate from the DSC via the purge-fill valves. This will protect both personnel and the operations area from potential contamination. For the accident case, personnel protection in the form of respirators or supplied air should be considered in accordance with the licensee's Radiation Protection Program.

12.1.3 Quality Assurance

Activities at the ISFSI shall be conducted in accordance with a Commission-approved quality assurance program which satisfies the applicable requirements of 10 CFR Part 50, Appendix B and which is established, maintained, and executed with regard to the ISFSI.

12.1.4 Heavy Loads Requirements

Lifts of the DSC in the TC must be made within the existing heavy loads requirements and procedures of the licensed nuclear power plant. The TC design has been reviewed under 10 CFR Part 72 and found to meet NUREG-0612 (Reference 14) and ANSI N14.6 (Reference 8). However, an additional safety review (under 10 CFR 50.59) is required to show operational compliance with NUREG-0612 and/or existing plant-specific heavy loads requirements.

12.1.5 Training Module

A training module shall be developed for the existing licensee's training program establishing an ISFSI training and certification program. This module shall include the following:

1. Standardized NUHOMS System Design (overview);
2. ISFSI Facility Design (overview);
3. Certificate of Compliance conditions (overview);
4. Fuel Loading, Transfer Cask Handling, DSC Transfer Procedures; and
5. Off-Normal Event Procedures.

12.1.6 Pre-Operational Testing and Training Exercise

A dry run of the DSC loading, TC handling and DSC insertion into the HSM shall be held. This dry run shall include, but not be limited to, the following:

1. Functional testing of the TC with lifting yokes to ensure that the TC can be safely transported over the entire route required for fuel loading, washdown pit and trailer loading.

2. DSC loading into the TC to verify fit and TC/DSC annulus seal.

3. Testing of TC on transport trailer and transported to ISFSI along a predetermined route and aligned with an HSM.

4. Testing of transfer trailer alignment and docking equipment. Testing of hydraulic ram to insert a DSC loaded with test weights into an HSM and then retrieve it.

5. Loading a mock-up fuel assembly into the DSC.

6. DSC sealing, vacuum drying, and cover gas backfilling operations (using a mock-up DSC).

7. Opening a DSC (using a mock-up DSC).

8. Returning the DSC and TC to the spent fuel pool.

12.1.7 Special Requirements for First System in Place

The heat transfer characteristics of the cask system will be confirmed by temperature measurements of the first DSC placed in service. The first DSC shall be loaded with 24 fuel assemblies, constituting a source of approximately 24 kW. The DSC shall be loaded into the HSM and the thermal performance will be assessed by measuring the air inlet and outlet temperatures for normal airflow. Details for obtaining the measurements are provided in Section 12.2.8, under "Surveillance."

A letter report summarizing the results of the measurements shall be submitted to the NRC for evaluation and assessment of the heat removal characteristics of the thermal design within 30 days of placing the DSC in service, in accordance with 10 CFR 72.4.

Should the first user of the system not have fuel capable of producing a 24 kW heat load, or be limited to a lesser heat load, as in the case of BWR fuel, the user may use a lesser load for the process, provided that a calculation of the temperature difference between the inlet and outlet temperatures is performed, using the same methodology and inputs documented in

the SAR, with lesser load as the only exception. The calculation and the measured temperature data shall be reported to the NRC in accordance with 10 CFR 72.4. The calculation and comparison need not be reported to the NRC for DSCs that are subsequently loaded with lesser loads than the initial case. However, for the first or any other user, the process needs to be performed and reported for any higher heat sources, up to 24 kW for PWR fuel and 19 kW for BWR fuel, which is the maximum allowed under the Certificate of Compliance. The NRC will also accept the use of artificial thermal loads other than spent fuel, to satisfy the above requirement.

12.1.8 Surveillance Requirements Applicability

The specified frequency for each Surveillance Requirement is met if the surveillance is performed within 1.25 times the interval specified in the frequency, as measured from the previous performance.

For frequencies specified as "once," the above interval extension does not apply.

If a required action requires performance of a surveillance or its completion time requires period performance of "once per...," the above frequency extension applies to the repetitive portion, but not to the initial portion of the completion time.

Exceptions to these requirements are stated in the individual specifications.

12.2 Technical Specifications, Functional and Operating Limits

12.2.1 Fuel Specification

Limit/Specification:	The characteristics of the spent fuel which is allowed to be stored in the standardized NUHOMS system are limited by those included in Tables 12-1a and 12-1b.
Applicability:	The specification is applicable to all fuel to be stored in the standardized NUHOMS system.
Objective:	The specification is prepared to ensure that the peak fuel rod temperatures, maximum surface doses, and nuclear criticality effective neutron multiplication factor are below the design values. Furthermore, the fuel weight and type ensures that structural conditions in the SAR bound those of the actual fuel being stored.
Action:	Each spent fuel assembly to be loaded into a DSC shall have the parameters listed in Tables 12-1a and 12-1b verified and documented. Fuel not meeting this specification shall not be stored in the standardized NUHOMS system.

Surveillance: Immediately, before insertion of a spent fuel assembly into an DSC, the identity of each fuel assembly shall be independently verified and documented.

Bases: The specification is based on consideration of the design basis parameters included in the SAR and limitations imposed as a result of the staff review. Such parameters stem from the type of fuel analyzed, structural limitations, criteria for criticality safety, criteria for heat removal, and criteria for radiological protection. The standardized NUHOMS system is designed for dry, horizontal storage of irradiated light water reactor (LWR) fuel. The principal design parameters of the fuel to be stored can accommodate standard PWR fuel designs manufactured by Babcock and Wilcox, Combustion Engineering, and Westinghouse, and standard BWR fuel manufactured by General Electric and is limited for use to these standard designs. The analyses presented in the SAR are based on non-consolidated, zircaloy-clad fuel with no known or suspected gross cladding breaches (See Tables 12-1a and 1b.)

The physical parameters that define the mechanical and structural design of the HSM and the DSC are the fuel assembly dimensions and weight. The calculated stresses given in this SER are based on the physical parameters given in Table 12-1a,b and represent the upper bound.

The design basis for nuclear criticality safety is based on the standard Babcock & Wilcox 15x15/208 pin fuel assemblies with initial enrichments up to 4.0 wt.% U-235, and General Electric 7x7 fuel assemblies with initial enrichments up to 4.0 wt.% U-235, for the standardized NUHOMS-24P and NUHOMS-52B designs, respectively. The HSM is designed to permit storage of irradiated fuel such that the irradiated fuel reactivity is less than or equal to 1.45 wt.% U-235 equivalent unirradiated fuel for the NUHOMS-24P design, and less than or equal to 4.0 wt.% U-235 initial enrichment fuel for the NUHOMS-52B design.

The thermal design criterion of the fuel to be stored is that the maximum heat generation rate per assembly be such that the fuel cladding temperature is maintained within established limits during normal and off-normal conditions. Fuel cladding temperature limits were established by the applicant based on methodology in PNL-6189 and PNL-4835 (References 47, 48). Based on this methodology, the staff has accepted that a maximum heat generation rate of 1 kW per assembly is a bounding value for the PWR fuel to be stored, and that 0.37 kW per assembly is a bounding value for the BWR fuel to be stored.

The radiological design criterion is that the gamma and neutron source strength of the irradiated fuel assemblies must be bounded by values of the neutron and gamma ray source strengths used by the vendor in the shielding analysis. The design basis source strengths were derived from a burnup analysis for (1) PWR fuel with 4.0 weight percent U-235 initial enrichment, irradiated to a maximum of 40,000 MWD/MTU, and a post irradiation time of five years; and (2) BWR fuel with 4.0 weight percent U-235 initial enrichment, irradiated to a maximum of 35,000 MWD/MTU, and a post irradiation time of 5 years.

Table 12-1a PWR Fuel Specifications of Fuel to be Stored in the Standardized NUHOMS-24P DSC[1]

Title or Parameter	Specifications
Fuel	Only intact, unconsolidated PWR fuel assemblies with the following requirements
Physical Parameters	
Assembly Length	See SAR Chapter 3
Nominal Cross-Sectional Envelope	See SAR Chapter 3
Maximum Assembly Weight	See SAR Chapter 3[2]
No. of Assemblies per DSC	≤24 intact assemblies
Fuel Cladding	Zircaloy-clad fuel with no known or suspected gross cladding breaches
Thermal Characteristics	
Decay Heat Power per Fuel Assembly	≤1.0 kW (this value is maximum for any given assembly, and may not be averaged for all 24 assemblies)
Radiological Characteristics	
Burnup	≤40,000 MWD/MTU
Post Irradiation Time	≥5 years
Maximum Initial Enrichment	≤4.0 wt. % U-235
Maximum Initial Uranium Content	≤472 kg/assembly
Maximum Initial Equivalent Enrichment	≤1.45 wt. % U-235[3]
Neutron Source Per Assembly	≤2.23E8 n/sec with spectrum bounded by that in Chapter 7 of SAR
Gamma Source Per Assembly	≤7.45E15 photon/sec with spectrum bounded by that in Chapter 7 of SAR

(1) The limiting fuel specifications listed above must be met by every individual fuel assembly to be stored in the standardized NUHOMS-24P system. Any deviation constitutes an Unanalyzed Condition and Violation of the Certificate of Compliance.

(2) Design valid for fuel weights up to 762.8 kg (1,682 lb).

(3) Determined by the PWR fuel criticality acceptance curve shown in Figure 12.1.

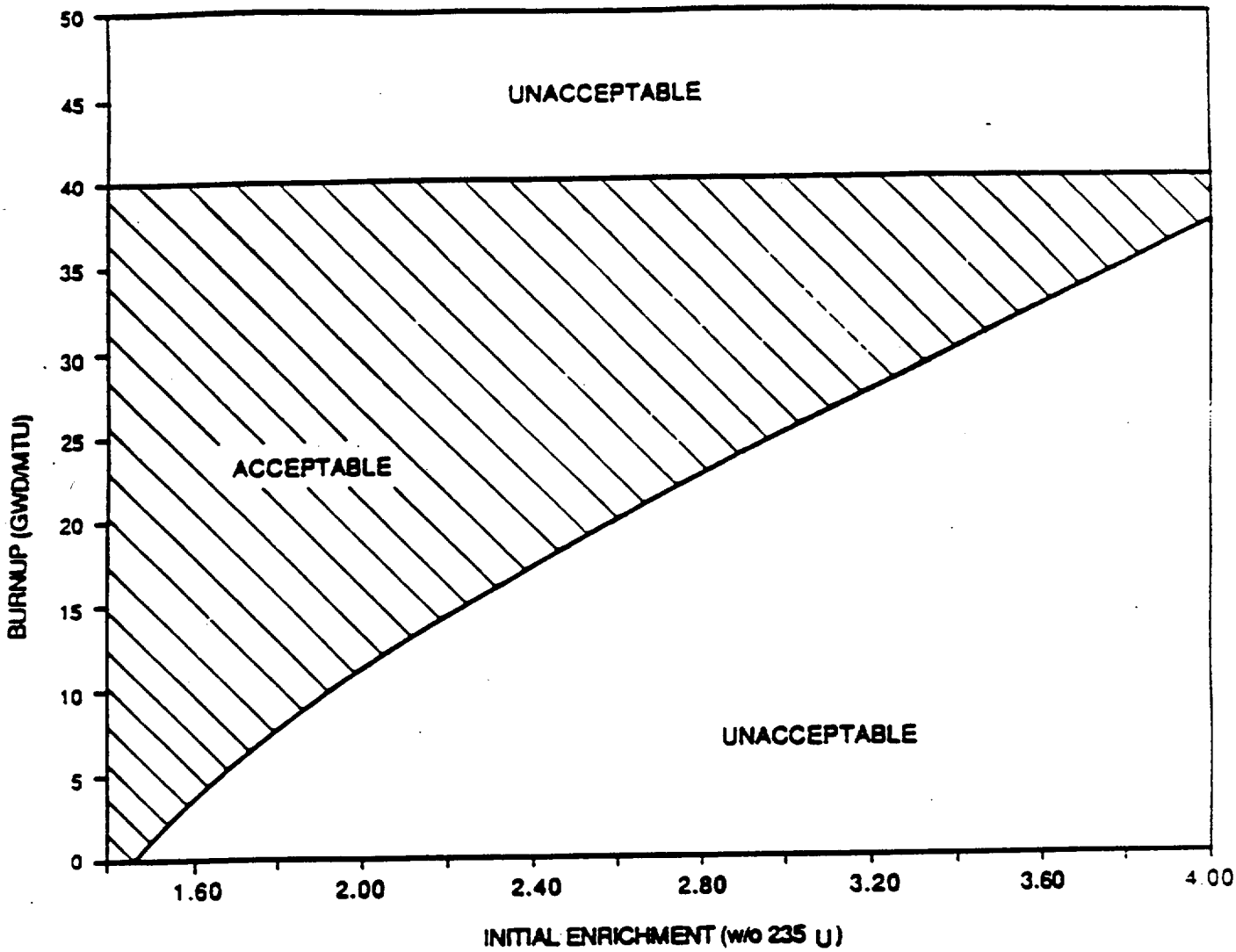

Figure 12.1

PWR Fuel Criticality Acceptance Curve

Table 12-1b BWR Fuel Specifications of Fuel to be Stored in the Standardized NUHOMS-52B DSC[1]

Title or Parameter	Specifications
Fuel	Only intact, unconsolidated BWR fuel assemblies with the following requirements
Physical Parameters	
Assembly Length	See SAR Chapter 3
Nominal Cross-Sectional Envelope	See SAR Chapter 3
Maximum Assembly Weight (w/fuel channels)	See SAR Chapter 3
No. of Assemblies per DSC	≤52 intact channeled assemblies
Fuel Cladding	Zircaloy-clad fuel with no known or suspected gross cladding breaches
Thermal Characteristics	
Decay Heat Power per Fuel Assembly	≤0.37 kW (this value is maximum for any given assembly, and may not be averaged for all 52 assemblies)
Radiological Characteristics	
Burnup	≤35,000 MWD/MTU
Post Irradiation Time	≥5 years
Maximum Initial Enrichment	≤4.0 wt. % U-235 (DSC with 0.75% borated neutron absorber plates)
Maximum Initial Uranium Content	≤198 kg/assembly
Neutron Source Per Assembly	≤1.01E8 n/sec with spectrum bounded by that in Chapter 7 of SAR
Gamma Source Per Assembly	≤2.63E15 photon/sec with spectrum bounded by that in Chapter 7 of SAR

(1) The limiting fuel specifications listed above must be met by every individual fuel assembly to be stored in the standardized NUHOMS-52B system. Any deviation constitutes an Unanalyzed Condition and Violation of the Certificate of Compliance.

12.2.2 DSC Vacuum Pressure During Drying

Limit/Specification:

Vacuum Pressure:	$\leq$ 0.4 kPa (3 mm Hg)
Time at Pressure:	$\geq$30 minutes following stepped evacuation
Number of Pump-Downs:	2

Applicability: This is applicable to all DSCs.

Objective: To ensure a minimum water content.

Action: If the required vacuum pressure cannot be obtained:

1. Confirm that the vacuum drying system is properly installed.
2. Check and repair, or replace, the vacuum pump.
3. Check and repair the system as necessary.
4. Check and repair the seal weld between the inner top cover plate and the DSC shell.

Surveillance: No maintenance or tests are required during normal storage. Surveillance of the vacuum gauge is required during the vacuum drying operation.

Bases: A stable vacuum pressure of 0.4 kPa ($\leq$3 mm Hg) further ensures that all liquid water has evaporated in the DSC cavity, and that the resulting inventory of oxidizing gases in the DSC is well below the 0.25 volume%.

12.2.3 DSC Helium Backfill Pressure

Limit/Specifications:

Helium 17.25 kPag (2.5 psig) ± 17.25 kPag (2.5 psig) backfill pressure (stable for 30 minutes after filling).

Applicability: This specification is applicable to all DSCs.

Objective: To ensure that: (1) the atmosphere surrounding the irradiated fuel is a non-oxidizing inert gas; (2) the atmosphere is favorable for the transfer of decay heat.

Action: If the required pressure cannot be obtained:

1. Confirm that the vacuum drying system and helium source are properly installed.
2. Check and repair or replace the pressure gauge.
3. Check and repair or replace the vacuum drying system.
4. Check and repair or replace the helium source.
5. Check and repair the seal weld on DSC top shield plug.

If pressure exceeds the criterion, release a sufficient quantity of helium to lower the DSC cavity pressure.

Surveillance: No maintenance or tests are required during the normal storage. Surveillance of the pressure gauge is required during the helium backfilling operation.

Bases: The value of 17.25 kPag (2.5 psig) was selected to ensure that the pressure within the DSC is within the design limits during any expected normal and off-normal operating conditions.

12.2.4 DSC Helium Leak Rate of Inner Seal Weld

Limit/Specification:

$\leq 1.0 \times 10^{-2}$ kPa · cm^3/s (1.0×10^{-4} atm · cubic centimeters per second) (atm · cm^3/s).

Applicability: This specification is applicable to the inner top cover plate seal weld of all DSCs.

Objective:

1. To limit the total radioactive gases normally released by each canister to negligible levels. Should fission gases escape the fuel cladding, they will remain confined by the DSC confinement boundary.

2. To retain helium cover gases within the DSC and prevent oxygen from entering the DSC. The helium improves the heat dissipation characteristics of the DSC and prevents any oxidation of fuel cladding.

Action: If the leak rate test of the inner seal weld exceeds 1.0×10^{-2} kPa · cm^3/s (1.0×10^{-4} atm · cm^3/s):

1. Check and repair the DSC drain and fill port fittings for leaks.

2. Check and repair the inner seal weld.

3. Check and repair the inner top cover plate for any surface indications resulting in leakage.

Surveillance: After the welding operation has been completed, perform a leak test with a helium leak detection device.

Bases: If the DSC leaked at the maximum acceptable rate of 1.0×10^{-2} kPa · cm^3/s (1.0×10^{-4} atm · cm^3/s) for a period of 20 years, only 63,100 cc of helium would escape from the DSC. This is only 1% of the 6.3×10^6 cm^3 of helium initially introduced in the DSC. This amount of leakage would have a negligible effect on the inert environment of the DSC cavity. Reference: American National Standards Institute, ANSI N14.5-1987, "For Radioactive Materials—Leakage Tests on Packages for Shipment" (Appendix B3).

12.2.5 DSC Dye Penetrant Test of Closure Welds

Limit/Specification:

All DSC closure welds except those subjected to full volumetric inspection shall be dye penetrant tested in accordance with the requirements of the ASME Boiler and Pressure Vessel Code Section III, Division 1, Article NB-5000 (Reference 8.3 of SAR). The liquid penetrant test acceptance standards shall be those described in Subsection NB-5350 of the Code.

Applicability: This is applicable to all DSCs. The welds include inner and outer top and bottom covers, and vent and syphon port covers.

Objective: To ensure that the DSC is adequately sealed in a redundant manner and leak tight.

Action: If the liquid penetrant test indicates that the weld is unacceptable:

1. The weld shall be repaired in accordance with approved ASME procedures.

2. The new weld shall be re-examined in accordance with this specification.

Surveillance: During DSC closure operations. No additional surveillance is required for this operation.

Bases: Article NB-5000 Examination, ASME Boiler and Pressure Vessel Code, Section III, Division 1, Sub-Section NB (Reference 8.3 of SAR).

12.2.6 DSC Top End Dose Rates

Limit/Specification:

Dose rates at the following locations shall be limited to levels which are less than or equal to:

a. 2 mSv/hr (200 mrem/hr) at top shield plug surface at centerline with water in cavity.

b. 4 mSv/hr (400 mrem/hr) at top cover plate surface at centerline without water in cavity.

Applicability: This specification is applicable to all DSCs.

Objective: The dose rate is limited to this value to ensure that the DSC has not been inadvertently loaded with fuel not meeting the specifications in Section 12.2.1 of the SER and to maintain dose rates as low as is reasonably achievable during DSC closure operations.

Action:

a. If specified dose rates are exceeded, the following actions should be taken:

   1. Confirm that the spent fuel assemblies placed in DSC conform to the fuel specifications of Section 12.2.1.

   2. Visually inspect placement of top shield plug. Re-install or adjust position of top shield plug.

   3. Install additional temporary shielding.

b. Submit a letter report to the NRC within 30 days summarizing the action taken and the results of the surveillance, investigation and findings. The report must be submitted using instructions in 10 CFR 72.4 with a copy sent to the administrator of the appropriate NRC regional office.

Surveillance: Dose rates shall be measured before seal welding the inner top cover plate to the DSC shell and welding the outer top cover plate to the DSC shell.

Basis: The basis for this limit is the shielding analysis presented in Section 7.0 of the SAR.

12.2.7 HSM Dose Rates

Limit/Specification:

Dose rates at the following locations shall be limited to levels which are less than or equal to:

a. 4 mSv/hr (400 mrem/hr) at 1 m (3 feet) from the HSM surface.

b. Outside of HSM door on centerline of DSC 1 mSv/hr (100 mrem/hr).

c. End Shield wall exterior 0.2 mSv/hr (20 mrem/hr).

Applicability: This specification is applicable to all HSMs which contain a loaded DSC.

Objective: The dose rate is limited to this value to ensure that the cask (DSC) has not been inadvertently loaded with fuel not meeting the specifications in Section 12.2.1 of the SER and to maintain dose rates as low as is reasonably achievable at locations on the HSMs where surveillance is performed, and to reduce off-site exposures during storage.

Action:

a. If specified dose rates are exceeded, the following actions should be taken:

1. Ensure that the DSC is properly positioned on the support rails.

2. Ensure proper installation of the HSM door.

3. Ensure that the required module spacing is maintained.

4. Confirm that the spent fuel assemblies contained in the DSC conform to the specifications of Section 12.2.1.

5. Install temporary or permanent shielding to mitigate the dose to acceptable levels in accordance with 10 CFR Part 20, 10 CFR 72.104(a), and ALARA.

b. Submit a letter report to the NRC within 30 days summarizing the action taken and the results of the surveillance, investagion and findings. The report must be submitted using instructions in 10 CFR 72.4 with a copy sent to the administrator of the appropriate NRC regional office.

Surveillance: The HSM and ISFSI shall be checked to verify that this specificantion has been met after the DSC is placed into storage and the HSM door is closed.

Basis: The basis for this limit is the shielding analysis presented in Section 7.0 of the SAR. The specified dose rates provide as-low-as-is-reasonably-achievable on-site and off-site doses in accordance with 10 CFR Part 20 and 10 CFR 72.104(a).

12.2.8 HSM Maximum Air Exit Temperature

Limit/Specification:

Following initial DSC transfer to the HSM or the occurrence of accident conditions, the equilibrium air temperature difference between ambient temperature and the vent outlet temperature shall not exceed 37.8°C (100°F) for ≥5 year cooled fuel, when fully loaded with 24 kW heat.

Applicability:

This specification is applicable to all HSMs stored in the ISFSI. If a DSC is placed in the HSM with a heat load less than 24 kW, the limiting difference between outlet and ambient temperatures shall be determined by a calculation performed by the user using the same methodology and inputs documents in the SAR and SER.

Objective:

The objective of this limit is to ensure that the temperature of the fuel cladding and the HSM concrete do not exceed the temperatures calculated in Section 8 of the SAR. That section shows that if the air outlet temperature difference is less than or equal to 37.8°C (100°F) (with a thermal heat load of 24 kW), the fuel cladding and concrete will be below the respective temperature limits for normal long-term operation.

Action:

If the temperature rise is greater than that specified, then the air inlets and exits should be checked for blockage. If the blockage is cleared and the temperature is still greater than that specified, the DSC and HSM cavity may be inspected using video equipment or other suitable means. If environmental factors can be ruled out as the cause of excessive temperatures, then the fuel bundles are producing heat at a rate higher than the upper limit specified in Section 3 of the SAR and will require additional measurements and analysis to assess the actual performance of the system. If excessive temperatures cause the system to perform in an unacceptable manner and/or the temperatures cannot be controlled to acceptable limits, then the cask shall be unloaded.

Surveillance:

The temperature rise shall be measured and recorded daily following DSC insertion until equilibrium temperature is reached, 24 hours after insertion, and again on a daily basis after insertion into the HSM or following the occurrence of accident conditions. If the temperature rise is within the specifications or the calculated value for a heat load less than 24 kW, then the HSM and DSC are performing as designed and no further temperature measurements are required. Air temperatures must be measured in such a manner as to obtain representative values of inlet and outlet air temperatures.

Basis:

The specified temperature rise is selected to ensure the fuel clad and concrete temperatures are maintained at or below acceptable long-term storage limits.

12.2.9 Transfer Cask Alignment with HSM

Limit/Specification:

The cask must be aligned with respect to the HSM so that the longitudinal centerline of the DSC in the transfer cask is within ±0.3 cm (±1/8 inch) of its true position when the cask is docked with the HSM front access opening.

Applicability: This specification is applicable during the insertion and retrieval of all DSCs.

Objective: To ensure smooth transfer of the DSC from the transfer cask to HSM and back.

Action: If the alignment tolerance is exceeded, the following actions should be taken:

a. Confirm that the transfer system is properly configured.

b. Check and repair the optical survey equipment.

c. Confirm the locations of the alignment targets on the transfer cask and HSM.

Surveillance: Before initiating DSC insertion or retrieval, site the targets with the optical survey equipment to confirm alignment. Observe the transfer system during DSC insertion or retrieval to ensure that motion or excessive vibration does not occur.

Basis: The basis for the true position alignment tolerance is the clearance between the DSC shell, the transfer cask cavity, the HSM access opening, and the DSC support rails inside the HSM.

12.2.10 DSC Handling Height Outside the Spent Fuel Pool Building

Limit/Specification:

1. The loaded TC/DSC shall not be handled at a height greater than 203 cm (80 inches) outside the spent fuel pool building.

2. In the event of a drop of a loaded TC/DSC from a height greater than 38 cm (15 inches) (a) fuel in the DSC shall be returned to the reactor spent fuel pool; (b) the DSC shall be removed from service and evaluated for further use; and (c) the TC shall be inspected for damage and evaluated for further use.

Applicability: The specification applies to handling the TC, loaded with the DSC, on route to, and at, the storage pad.

Objective:

1. To preclude a loaded TC/DSC drop from a height greater than 203 cm (80 inches).

2. To maintain spent fuel integrity, according to the spent fuel specification for storage, continued confinement integrity, and DSC functional capability, after a tip-over or drop of a loaded DSC from a height greater than 38 cm (15 inches).

Surveillance: In the event of a loaded TC/DSC drop accident, the system will be returned to the reactor fuel handling building, where, after the fuel has been returned to the spent fuel pool, the DSC and TC will be inspected and evaluated for future use.

Basis: The NRC evaluation of the TC/DSC drop analysis concurred that drops up to 203 cm (80 inches), of the DSC inside the TC, can be sustained without breaching the confinement boundary, preventing removal of spent fuel assemblies, or causing a criticality accident. This specification ensures that handling height limits will not be exceeded in transit to, or at the storage pad. Acceptable damage may occur to the TC, DSC, and the fuel stored in the DSC, for drops of height greater than 38 cm (15 inches). The specification requiring inspection of the DSC and fuel following a drop of 38 cm (15 inches) or greater ensures that the spent fuel will continue to meet the requirements for storage, the DSC will continue to provide confinement, and the TC will continue to provide its design functions of DSC transfer and shielding.

12.2.11 Transfer Cask Dose Rates

Limit/Specification:

Dose rates from the transfer cask shall be limited to levels which are less than or equal to:

a. 2 mSv/hr (200 mrem/hr) at 1 m (3 feet) with water in the DSC cavity.

b. 5 mSv/hr (500 mrem/hr) at 1 m (3 feet) without water in the DSC cavity.

Applicability: This specification is applicable to the transfer cask containing a loaded DSC.

Objective: The dose rate is limited to this value to ensure that the DSC has not been inadvertently loaded with fuel not meeting the specifications in Section 12.2.1 of the SER and to maintain dose rates as low as reasonably achievable during DSC transfer operations.

Action: If specified dose rates are exceeded, place temporary shielding around affected areas of transfer cask and review the plant records of the fuel assemblies which have been placed in DSC to ensure they conform to the fuel specifications of Section 12.2.1. Submit a letter report to the NRC within 30 days summarizing the action taken and the results of the surveillance, investigation and findings. The report must be submitted using instructions in 10 CFR 72.4 with a copy sent to the administrator of the appropriate NRC regional office.

Surveillance: The dose rates should be measured as soon as possible after the transfer cask is removed from the spent fuel pool.

Basis: The basis for this limit is the shielding analysis presented in Section 7.0 of the SAR.

12.2.12 Maximum DSC Removable Surface Contamination

Limit/Specification:

36.5 Bq/100 cm^2 (2,200 dpm/100 cm^2) for beta-gamma sources
3.65 Bq/100 cm^2 (220 dpm/100 cm^2) for alpha sources.

Applicability: This specification is applicable to all DSCs.

Objective: To ensure that release of non-fixed contamination above accepted limits does not occur.

Action: If the required limits are not met:

a. Flush the DSC/transfer cask annulus with demineralized water and repeat surface contamination surveys of the DSC upper surface.

b. If contamination of the DSC cannot be reduced to an acceptable level by this means, direct surface cleaning techniques shall be used following removal of the fuel assemblies from the DSC and removal of the DSC from the transfer cask.

c. Check and replace the DSC/transfer cask annulus seal to ensure proper installation and repeat canister loading process.

Surveillance: Following placement of each loaded DSC/transfer cask into the cask decontamination area, fuel pool water above the top shield plug shall be removed and the top region of the DSC and cask shall be decontaminated. A contamination survey of the upper 0.3 m (1 foot) of the DSC and cask shall be taken. In addition, contamination surveys shall be taken on the inside surfaces of the TC after the DSC has been transferred into the HSM. If the above surface contamination limit is exceeded, the TC shall be decontaminated.

Basis: This non-fixed contamination level is consistent with the requirements of 10 CFR 71.87(i)(1) and 49 CFR 173.443, which regulate the use of spent fuel shipping containers. Consequently, these contamination levels are considered acceptable for exposure to the general environment. This level will also ensure that contamination levels of the inner surfaces of the HSM and potential releases of radioactive material to the environment are minimized.

12.2.13 TC/DSC Lifting Heights as a Function of Low Temperature and Location

Limit/Specification:

1. No lifts or handling of the TC/DSC at any height are permissible at DSC basket temperatures below -28.9°C (-20°F) inside spent fuel pool building.

2. The maximum lift height of the TC/DSC shall be 203 cm (80 inches) if the basket temperature is below -17.8°C (0°F) but higher than -28.9°C (-20°F) inside the spent fuel pool building.

3. No lift height restriction is imposed on the TC/DSC if the basket temperature is higher than -17.8°C (0°F) inside the spent fuel pool building.

4. The maximum lift height and handling height for all transfer operations outside the spent fuel pool building shall be 203 cm (80 inches) <u>and</u> the basket temperature may not be lower than -17.8°C (0°F).

Applicability: These temperature and height limits apply to lifting and transfer of all loaded TC/DSCs inside and outside the spent fuel pool building. 10 CFR Part 72 applies outside the spent fuel pool building and 10 CFR Part 50 applies inside the spent fuel pool building.

Objective: The low temperature and height limits are imposed to ensure that brittle fracture of the ferritic steels, used in the TC trunnions and shell and in the DSC basket, does not occur during transfer operations.

Action: Confirm the basket temperature before transfer of the TC. If no calculation or measurement of this value is available, then the ambient temperature may conservatively be used.

Surveillance: The ambient temperature shall be measured before transfer of the TC/DSC.

Bases: The basis for the low temperature and height limits is ANSI N14.6-1986 paragraph 4.2.6 (Reference 8) which requires at least 4.4°C (40°F) higher service temperature than nil ductility transition (NDT) temperature for the TC. In the case of the standardized TC, the test temperature is -40°C (-40°F); therefore, although the NDT temperature is not determined, the material will have the required 4.4° (40°F) margin if the ambient temperature is -17.8°C (0°F) or higher. This assumes the material service temperature is equal to the ambient temperature.

The basis for the low temperature limit for the DSC is NUREG/CR-1815. The basis for the handling height limits is the NRC evaluation of the structural integrity of the DSC to drop heights of 203 cm (80 inches) and less.

12.2.14 TC/DSC Transfer Operations at High Ambient Temperatures

Limit/Specification:

1. The ambient temperature for transfer operations of a loaded TC/DSC shall not be greater that 37.8°C (100°F) (when cask is exposed to direct insolation).

2. For transfer operations when ambient temperatures exceed 37.8°C (100°F) up to 52°C (125°F), a solar shield shall be used to provide protection against direct solar radiation.

Applicability: This ambient temperature limit applies to all transfer operations of loaded TC/DSCs outside the spent fuel pool building, the spent fuel pool building.

Objective: The high temperature limit 37.8°C (100°F) is imposed to ensure that:

1. The fuel cladding temperature limit is not exceeded.

2. The solid neutron shield material temperature limit is not exceeded, and

3. The corresponding TC cavity pressure limit is not exceeded.

Action: Confirm what the ambient temperature is and provide appropriate solar shade if ambient temperature is expected to exceed 37.8°C (100°F).

Surveillance: The ambient temperature shall be measured before transfer of the TC/DSC.

Bases: The basis for the high temperature limit is PNL-6189 for fuel clad limit, the manufacturer's specification for neutron shield and the design basis pressure of the TC internal cavity pressure.

12.2.15 Boron Concentration in the DSC Cavity Water (24-P Design Only)

Limit/Specification:

The DSC cavity shall be filled only with water having a boron concentration equal to, or greater than 2,000 ppm.

Applicability: This limit applies only to the standardized NUHOMS-24P design. No boration in the cavity water is required for the standardized NUHOMS-52B system since that system uses fixed absorber plates.

Objective: To ensure a subcritical configuration is maintained in the case of accidental loading of the DSC with unirradiated fuel.

Action: If the boron concentration is below the required weight percentage concentration (gm boron/10^6 gm water), add boron and re-sample, and test the concentration until the boron concentration is shown to be greater than that required.

Surveillance: Written procedures shall be used to independently determine (two samples analyzed by different individuals) the boron concentration in the water used to fill the DSC cavity.

1. Within 4 hours before insertion of the first fuel assembly into the DSC, the dissolved boron concentration in water in the spent fuel pool, and in the water that will be introduced in the DSC cavity, shall be independently determined (two samples chemically analyzed by two individuals).

2. Within 4 hours before flooding the DSC cavity for unloading the fuel assemblies, the dissolved boron concentration in water in the spent pool, and in the water that will be introduced into the DSC cavity, shall be independently determined (two samples analyzed chemically by two individuals).

3. The dissolved boron concentration in the water shall be reconfirmed at intervals not to exceed 48 hours until such time as the DSC is removed from the spent fuel pool or the fuel has been removed from the DSC.

Bases: The required boron concentration is based on the criticality analysis for an accidental misloading of the DSC with unburned fuel, maximum enrichment, and optimum moderation conditions.

12.2.16 Provision of TC Seismic Restraint Inside the Spent Fuel Pool Building as a Function of Horizontal Acceleration and Loaded Cask Weight

Limit/Specification:	Seismic restraints shall be provided to prevent overturning of a loaded TC during a seismic event if a certificate holder determines that the horizontal acceleration is 0.40 g or greater and the fully loaded TC weight is less than 86,260 kg (190 kips). The determination of horizontal acceleration acting at the CG of the loaded TC must be based on a peak horizontal ground acceleration at the site, but shall not exceed 0.25 g.
Applicability:	This condition applies to all TCs which are subject to horizontal accelerations of 0.40 g or greater.
Objective:	To prevent overturning of a loaded TC inside the spent fuel pool building.
Action:	Determine what the horizontal acceleration is for the TC and determine if the cask weight is less than 86,260 kg (190 kips).
Surveillance:	Determine need for TC restraint before any operations inside the spent fuel pool building.
Bases:	Calculation of overturning and restoring moments.

12.3 Surveillance and Monitoring

Paragraph 10.2.3 of the SAR outlines a single surveillance requirement proposed by PNFS. However, as discussed below, there are many items subject to monitoring. The single item subject to surveillance is the HSM air inlet and outlet passages. They shall be inspected once every 4 days to ensure that they are clear of obstructions. The SER notes that this proposed surveillance frequency could result in exceeding the HSM concrete temperature limit of 177°C (350°F) for accident conditions of blocked inlets or outlets. The concrete temperature for this adiabatic heat-up will exceed 177°C (350°F) in approximately 40 hours. Furthermore, the maximum fuel clad temperature will be exceeded in a 5-day period. Although the vendor-proposed 4-day inspection frequency will prevent exceeding the fuel cladding temperature, the HSM would need to be removed from service if inlets or outlets are found to be substantially blocked, and it cannot be established that the blockage is less than 40 hours.

As a result of this situation, the NRC staff is requiring the following surveillance frequency for the HSM.

12.3.1 Visual Inspection of HSM Air Inlets and Outlets (Front Wall and Roof Birdscreen)

Limit/Surveillance: A visual surveillance of the exterior of the air inlets and outlets shall be conducted daily. In addition, a close-up inspection shall be performed to ensure that no materials accumulate between the modules to block the air flow.

Objective: To ensure that HSM air inlets and outlets are not blocked for more than 24 hours to prevent exceeding the allowable HSM concrete temperature or the fuel cladding temperature.

Applicability: This specification is applicable to all HSMs loaded with a DSC loaded with spent fuel.

Action: If the surveillance shows blockage of air vents (inlets or outlets), they shall be cleared. If the screen is damaged, it shall be replaced.

Basis: The concrete temperature could exceed 177°C (350°F) in the accident circumstances of complete blockage of all vents if the period exceeds approximately 40 hours. Concrete temperatures over 177°C (350°F) in accidents (without the presence of water or steam) can have uncertain impact on concrete strength and durability. A conservative analysis (adiabatic heat case) of complete blockage of all air inlets or outlets indicates that the concrete can reach the accident temperature limit of 177°C (350°F) in a time period of approximately 40 hours.

12.3.2 HSM Thermal Performance

Surveillance: Verify a temperature measurement of the thermal performance, for each HSM, on a daily basis. The temperature measurement could be any parameter such as (1) a direct measurement of the HSM temperatures, (2) a direct measurement of the DSC temperatures, (3) a comparison of the inlet and outlet temperature difference to predicted temperature differences for each individual HSM, or (4) other means that would identify and allow for the correction of off-normal thermal conditions that could lead to exceeding the concrete and fuel clad temperature criteria. If air temperatures are measured, they must be measured in such a manner as to obtain representative values of inlet and outlet air temperatures. Also due to the proximity of adjacent HSM modules, care must be exercised to ensure that measured air temperatures reflect only the thermal performance of an individual module, and not the combined performance of adjacent modules.

Action: If the temperature measurement shows a significant unexplained difference, so as to indicate the approach of materials to the concrete or fuel clad temperature criteria, take appropriate action to determine the cause and return the canister to normal operation. If the measurement or other evidence suggests that the concrete accident temperature criteria 177°C (350°F) has been exceeded for more than 24 hours, the HSM must be removed from service unless the licensee can provide test results in accordance with ACI-349, appendix A.4.3, demonstrating that the structural strength of the HSM has an adequate margin of safety.

Basis: The temperature measurement should be of sufficient scope to provide the licensee with a positive means to identify conditions which threaten to approach temperature criteria for proper HSM operation and allow for the correction of off-normal thermal conditions that could lend to exceeding the concrete and fuel clad temperature criteria.

Table 12.3.1

Summary of Surveillance and Monitoring Requirements

Surveillance or Monitoring	Period	Reference Section
1. Fuel Specification	PL	12.2.1
2. DSC Vacuum Pressure During Drying	L	12.2.2
3. DSC Helium Backfill Pressure	L	12.2.3
4. DSC Helium Leak Rate of Inner Seal Weld	L	12.2.4
5. DSC Dye Penetrant Test of Closure Welds	L	12.2.5
6. DSC Top End Dose Rates	L	12.2.6
7. HSM Dose Rates	L	12.2.7
8. HSM Maximum Air Exit Temperature	24 hrs	12.2.8
9. TC Alignment with HSM	S	12.2.9
10. DSC Handling Height Outside Spent Fuel Pool Building	AN	12.2.10
11. Transfer Cask Dose Rates	L	12.2.11
12. Maximum DSC Surface Contamination	L	12.2.12
13. TC/DSC Lifting Heights as a Function of Low Temperature and Location	L	12.2.13

Legend

PL Prior to loading
L During loading and prior to movement to HSM pad
24 hrs Time following DSC insertion into HSM
S Prior to movement of DSC to or from HSM
AN As necessary
D Daily (24 hour frequency)

Table 12.3.1

Summary of Surveillance and Monitoring Requirements (Continued)

Surveillance or Monitoring	Period	Reference Section
14. TC/DSC Transfer Operations at High Ambient Temperatures	L	12.2.14
15. Boron Concentration in DSC Cavity Water (24-P Design Only)	PL	12.2.15
16. Provision of TC Seismic Restraint Inside the Spent Fuel Pool Building as a Function of Horizontal Acceleration and Loaded Cask Weight	PL	12.2.16
17. Visual Inspection of HSM Air Inlets and Outlets	D	12.3.1
18. HSM Thermal Performance	D	12.3.2

Legend

PL Prior to loading
L During loading and prior to movement to HSM pad
24 hrs Time following DSC insertion into HSM
S Prior to movement of DSC to or from HSM
AN As necessary
D Daily (24 hour frequency)

13.0 REFERENCES

1. Pacific Nuclear Fuel Services, Inc., "Safety Analysis Report for the Standardized NUHOMS Horizontal Modular Storage System for Irradiated Nuclear Fuel," Docket No. 72-1004:

   a. NUH-003, Rev. 0, December 20, 1990.

   b. NUH-003, Rev. 1, September 25, 1991.

   c. NUH-003, Rev. 2, November 5, 1993.

   [Note: Where different submittals are at variance in addressing the same subject, the most recent submittal governs.]

2. Office of the Federal Register, Code of Federal Regulations, Title 10 - Energy, Chapter I - Nuclear Regulatory Commission (10 CFR), Revised as of January 1, 1993. Following parts referenced:

   a. 10 CFR Part 72, "Licensing Requirements for the Independent Storage of Spent Nuclear Fuel and High-Level Radioactive Waste."

   b. 10 CFR Part 20, "Standards for Protection Against Radiation."

   c. 10 CFR Part 50, "Domestic Licensing of Production and Utilization Facilities."

   d. 10 CFR Part 71, "Packaging and Transportation of Radioactive Material."

3. U.S. Nuclear Regulatory Commission, "Safety Evaluation Report Related to the TR for the NUTECH Horizontal Modular Storage System for Irradiated Nuclear Fuel Submitted by Nutech Engineers, Inc.," NUH-002, Rev. 1A, April 1989.

4. U.S. Nuclear Regulatory Commission, "Safety Evaluation Report for a Design Change to the Transfer Cask for the Duke Power Company's ISFSI," February 1990.

5. U.S. Nuclear Regulatory Commission, "Standard Format and Content for the Safety Analysis Report for an Independent Spent Fuel Storage Installation or Monitored Retrievable Storage Installation (Dry Storage)," Regulatory Guide 3.48, August 1989.

6. U.S. Nuclear Regulatory Commission, "Quality Assurance Program Requirements (Design and Construction)," Regulatory Guide 1.28, February 1979.

7. U.S. Nuclear Regulatory Commission, "Recommendations for Protecting Against Failure by Brittle Fracture in Ferritic Steel Shipping Containers up to Four Inches Thick," NUREG/CR-1815, August 1981.

8. American National Standards Institute, ANSI N14.6-1986, "Special Lifting Devices for Shipping Containers Weighing 10,000 Pounds or More," 1987.

9. American Society of Mechanical Engineers, ASME Boiler and Pressure Vessel Code, Section III, Division 1, 1983 Edition with Winter 1985 Addenda.

10. U.S. Nuclear Regulatory Commission, "Information Relevant to Ensuring That Occupational Radiation Exposures at Nuclear Power Stations Will Be As Low As is Reasonably Achievable," Regulatory Guide 8.8, Rev. 3, June 1978.

11. U.S. Nuclear Regulatory Commission, "Operating Philosophy for Maintaining Occupational Radiation Exposures As Low As Is Reasonably Achievable," Regulatory Guide 8.10, May 1977.

12. Fintel, M., Handbook of Concrete Engineering, Van Nostrand Reinhold Co., New York, New York (1985).

13. Bolz, R.E., and G.L. Tuve, CRC Handbook of Tables for Applied Science, 2nd Edition, Chemical Rubber Co., 1973.

14. U.S. Nuclear Regulatory Commission, "Control of Heavy Loads at Nuclear Power Plants," NUREG-0612, July 1980.

15. U.S. Nuclear Regulatory Commission, "Safety Evaluation Report for Pacific Sierra Nuclear TR of a Ventilated Storage Cask System for Irradiated Fuel," March 1991.

16. U.S. Nuclear Regulatory Commission, "Safety Evaluation Report for the Baltimore Gas and Electric Company's Safety Analysis Report for an Independent Spent Field Storage Installation at Calvert Cliffs," November 1992.

17. American Concrete Institute, "Code Requirements for Nuclear Safety Related Concrete Structures and Commentary," ACI 349-85, American Concrete Institute, Detroit, Michigan, 1985.

18. PNFS, "Standard NUHOMS Prefabricated Module - HSM and DSC Support Structure Analysis and Design," NUH004.0200/R1, R2, R3, R4, R5.

19. American Concrete Institute, "Building Code Requirements for Reinforced Concrete," ACI 318-83, 1983.

20. PNFS, "Thermal Analysis of Standardized NUHOMS During Blocked Inlet and Outlet Openings in the HSM Sidewalls for 1 kW Per Fuel Assembly Decay Heat," NUH004.0416/R0, December 12, 1991.

21. Swanson Analysis Systems, Inc., ANSYS Engineering Analysis Systems User's Manual, Version 4.4, Volumes 1 and 2, Pittsburgh, Pennsylvania.

22. American National Standards Institute, ANSI 57.9-1984 "Design Criteria for an Independent Spent Fuel Storage Installation (Dry Storage Type)."

23. U.S. Nuclear Regulatory Commission, "Standard Review Plan," NUREG-0800, Rev. 2.

24. U.S. Nuclear Regulatory Commission, "Design Basis Tornado for Nuclear Power Plants," Regulatory Guide 1.76, April 1974.

25. U.S. Nuclear Regulatory Commission, Regulatory Guide 1.60, "Design Response Spectra for Seismic Design of Nuclear Power Plants, Rev. 1," December 1973.

26. U.S. Nuclear Regulatory Commission, Regulatory Guide 1.61, "Damping Values for Seismic Design of Nuclear Power Plants," October 1973.

27. U.S. Nuclear Regulatory Commission, "Combining Model Responses and Spatial Components in Seismic Response Analysis," Regulatory Guide 1.92, February 1976.

28. National Fire Protection Association Codes, "Lightning Protection Code," NFPA 78.

29. PNFS, "Standardized NUHOMS HSM Air Flow Calculation," NUH004.0418/R0, December 22, 1992.

30. PNFS, "Standardized NUHOMS HSM Heat Transfer Analysis," NUH004.0419/R0, December 22, 1992.

31. U.S. Nuclear Regulatory Commission, "Design of an Independent Spent Fuel Storage Installation (Dry Storage)," Regulatory Guide 3.60, March 1987 (which incorporates ANSI/ANS 57.9-1984 (Reference 23).

32. American Institute of Steel Construction (AISC), "Specifications for Structural Steel Buildings," 1989, contained in the AISC Manual of Steel Construction, Ninth Edition, 1989.

33. PNFS, "10 CFR 72 NUHOMS-24P and -52B DSC Structural Analysis," NUH004.0202/R2, January 4, 1993.

34. PNFS, "Cask Axial and Radial Thermal Analysis for Standardized NUHOMS-24P Design with 5-year Old Fuel (1 kW per Fuel Assembly)," NUH004.0407/Rev. 0, September 10, 1991.

35. Electric Power Research Institute, "The Effects of Target Hardness on the Structural Design of Concrete Storage Pads for Spent Fuel Casks," NP-4830, October 1986.

36. Electric Power Research Institute, "Structural Design of Concrete Storage Pads for Spent Fuel Casks," NP-7551, August 1991.

37. Warrant, M. and J. Joseph, "Test Data Report for Quarter Scale NUPAC 125-B Cask Model," Report No. GEND-INF-091, Sandia National Laboratories, February 1988.

38. NUTECH Engineers Inc., NUH-002, "Topical Report for the NUTECH Horizontal Modular Storage System for Irradiated Nuclear Fuel, NUHOMS-24P," Rev. 1A, July 1989, and additional docketed supporting and modifying submittals.

39. U.S. Nuclear Regulatory Commission, "Safety Evaluation Report Related to the Topical Report for the NUTECH Horizontal Modular Storage System for Irradiated Nuclear Fuel Topical Report NUHOMS-24P, submitted by NUTECH Engineers, Inc.," April 1989.

40. Pacific Nuclear Fuel Services, Inc., TR Amendment 2 for the NUTECH Horizontal Modular Storage System for Irradiated Nuclear Fuel, NUHOMS-24P (NUH-002, Rev. 2).

41. NUTECH Engineers, Inc., "Transfer Cask Structural Analysis," Calc. No. BGE 001.0202, Rev. 4, 1990.

42. PNFS, "Standardized NUHOMS BWR Cask Collar Structural Evaluation," NUH004.0205/R0.

43. PNFS, "Standard NUHOMS Transfer Cask Thermal Stress Analysis," NUH004.0206/R0.

44. American National Standards Institute/ASME NOG-1-1983, "Rules for Construction of Overhead and Gantry Cranes," 1983.

45. NUTECH Engineers, Inc., "Topical Report NUH-001 for the NUTECH Horizontal Modular Storage System for Irradiated Nuclear Fuel, NUHOM-7P," Rev. 1A.

46. U.S. Nuclear Regulatory Commission, "Safety Evaluation Report for NUTECH Horizontal Modular System for Irradiated Fuel Topical Report," March 28, 1986.

47. Levy, I.S., et al., "Recommended Temperature Limits for Dry Storage of Spent Light Water Reactor Zircaloy-Clad Fuel Rods in Inert Gas," Pacific Northwest Laboratory Report, PNL-6189, May 1987.

48. Johnson, A.B., Jr., and E.R. Gilbert, "Technical Basis for Storage of Zircaloy-Clad Spent Fuel in Inert Gases," PNL-4835, September 1983.

49. Elrod, D.C., et al., "HEATING-6: A Multidimensional Heat Conductor Analysis With the Finite Difference Formulation," NUREG/CR-200, Vol. 2, Sec. F10, ORNL/NUREG/CSD-2/V2, October 1981.

50. Pacific Nuclear Corporation NUHO04.0416, "Thermal Analysis of Standardized NUHOMS During Blocked Inlet and Outlet Openings in the HSM Sidewalls for 1 kW Per Fuel Assembly Decay Heat," Rev. 0, December 12, 1991.

51. Pacific Nuclear Corporation, NUH004.0418, Rev. 0, "Standardized NUHOMS HSM Air Flow Calculation," December 22, 1992.

52. Pacific Nuclear Corporation, NUH004.0419, Rev. 0, "Standard NUHOMS HSM Heat Transfer Analysis," December 22, 1992.

53. Pacific Nuclear Corporation NUH004.0412, "NUHOMS-24P DSC Thermal Analysis for 1 kW Fuel," Rev. 1, December 22, 1992.

54. Pacific Nuclear Corporation NUH004.0414, "NUHOMS-24B DSC Thermal Analysis," Rev. 1, December 22, 1992.

55. Pacific Nuclear Corporation DUK003.0203, "Dry Storage Cladding Temperature Limits for the 24P NUHOMS System Using the CSFSM Model Presented in PNL-6189," Rev. 0, July 11, 1991.

56. Pacific Nuclear Corporation NUH004.0410, "Dry Storage Cladding Temperature Limits for the Standardized NUHOMS-52B Using the CSFM Model Presented in PNL-6189," Rev. 0, August 28, 1991.

57. Pacific Nuclear Corporation NUH004.0507, "NUHOMS-24P Radiological and Thermal Source Term Calculation," Rev. 0, August 14, 1992.

58. Pacific Nuclear Corporation NUH004.0407, "Cask Axial and Radial Thermal Analysis for Standardized NUHOMS-24P Design with 5-year Old Fuel (1 kW per Fuel Assembly)," Rev. 0, September 10, 1991.

59. Pacific Nuclear Corporation NUH004.0406, "Cask Axial and Radial Thermal Analysis for Standardized NUHOMS-52B Design," Rev. 0, September 10, 1991.

60. Oak Ridge National Laboratory, SCALE-3: A Modular Code System for Performing Standardized Computer Analysis for Licensing Evaluation, NUREG/CR-0200, Rev. 3, December 1984.

61. Ryman, J.C., O.W. Herman, C.C. Webster, C.V. Parks, "Fuel Inventory and Afterheat Power Studies of Uranium-Fuel Pressurized Water Reactor Fuel Assemblies Using the SAS2 and ORIGEN-S Modules of SCALE with an ENDF/-B-V Updated Cross-Section Library," NUREG/CR-2397 (ORNL-CSD-90), U.S. Nuclear Regulatory Commission and Oak Ridge National Laboratory, 1980.

62. Office of Civilian Radioactive Waste Management," Characteristics of Spent Fuel, High-Level Waste, and Other Radioactive Wastes Which May Require Long-Term Isolation," DOE/RW-0184, December 1987.

63. Grove Engineering, Inc., "Microshield User's Manual, A Program for Analyzing Gamma Radiation Shielding," Version 2.0, 1985.

64. Oak Ridge National Laboratory, "ANISN/PC - Multigroup One-Dimensional Discrete Ordinates Transport Code System with Anisotropic Scattering," CCC-514 MICRO, Oak Ridge National Laboratory, 1977.

65. Oak Ridge National Laboratory, "QAD-CGGP, A Combinational Geometer Version of QAD-P5A, A Point Kernal Using the GP Buildup Factor," CCC-493, Oak Ridge National Laboratory, 1986.

66. Edenius, Malte, et al., "CASMO-2 - A Fuel Assembly Burnup Program," STUDSVIK/NR-81/3, March 1981.

67. SAS2 SCALE-3, Op. Cit.

68. Petrie, L.M. and N.F. Cross, "KENO IV: An Improved Monte Carlo Criticality Program." ORNL-4938, November 1975.

69. Oak Ridge National Laboratory, "KENO5A-PC, Monte Carlo Criticality Program with Supergrouping," CCC-548, June 1990.

70. PNFS, "QA Category 2 Computer Code Verification Document KENO5A, PNFSI Version 1.2.0," Rev. 0.

71. Proceedings of the Workshop on Source Term for Radionuclide Migration from High Level Waste or Spent Nuclear Fuel - Page 175, Albuquerque, NM, November 13-15, 1984, SAND 85-0380, Hunter and Muir, Editors.

UNITED STATES
NUCLEAR REGULATORY COMMISSION
WASHINGTON, D.C. 20555-0001

August 5, 1994

MEMORANDUM FOR: James M. Taylor
Executive Director for Operations

FROM: Edward L. Jordan, Chairman
Committee to Review Generic Requirements

SUBJECT: MINUTES OF CRGR MEETING NUMBER 259

The Committee to Review Generic Requirements (CRGR) met on Tuesday, July 12, 1994 from 8:00 a.m. to 10:30 a.m. A list of attendees is provided in Enclosure 1. The following items were discussed at the meeting:

1. The CRGR reviewed a proposed generic letter endorsing, subject to some clarifications, industry guidance on performing analog-to-digital replacements in safety systems. (Specially, the guidance deals with determining whether or not prior NRC review is required under 10 CFR 50.59.) The CRGR recommended in favor of the letter, subject to several revisions to be coordinated with the CRGR staff. This matter is discussed in Enclosure 2.

2. The CRGR discussed procedures for handling comments received from outside the NRC while the staff is preparing proposed rulemaking and generic correspondence packages. It was agreed that the CRGR staff would prepare a response, as appropriate, to an example of such a comment letter and the members will be informed of the results. This matter is discussed in Enclosure 3.

3. The CRGR discussed the Commission's recent instructions on the scope of CRGR review and developed a consensus view on several aspects of the implementation of these instructions. This matter is discussed in Enclosure 4.

In accordance with the EDO's July 18, 1983 directive concerning "Feedback and Closure of CRGR Review," a written response is required from the cognizant office to report agreement or disagreement with the CRGR recommendations in

these minutes. The response is to be forwarded to the CRGR Chairman and if there is disagreement with the CRGR recommendations, to the EDO for decision-making.

Questions concerning these meeting minutes should be referred to Dennis P. Allison (415-6835).

Edward L. Jordan, Chairman
Committee to Review Generic Requirements

Enclosures: As stated

cc w/encl.:
Commission (5)
SECY
J. Lieberman
P. Norry
D. Williams
K. Cyr
Regional Administrators
B. Boger
W. Olmstead
CRGR Members

Enclosure 1

Attendance List

CRGR Meeting No. 259

July 12, 1994

CRGR Members

D. Ross (for E. Jordan
G. Arlotto
J. Cutchin (for J. Moore)
F. Miraglia
W. Kane
J. Murphy

CRGR Staff

D. Allison

NRC Staff

B. Boger
J. Wermiel
J. Mauck
P. Loeser
T. J. Kim
R. Pulsipher
W. Olmstead
R. Kiessel
E. Doolittle

Enclosure 2 to the Minutes of CRGR Meeting No. 259
Proposed Generic Letter on Performing
Analog-to-Digital Replacements

July 12, 1994

TOPIC

B. Boger, J. Wermiel, J. Mauck and P. Loeser of NRR presented the subject letter for CRGR review. The letter, which the staff proposed to publish for comment, would generally endorse the guidance in NUMARC/EPRI Report TR-102348 for the purpose of determining whether or not safety systems can be converted from analog to digital under 10 CFR 50.59 without prior NRC review.

BACKGROUND

The package submitted for CRGR review in this matter was transmitted by a memorandum from F. Miraglia to E. Jordan, dated June 13, 1994, Subject: Request for Review and Endorsement of Proposed Generic Letter titled, "Use of NUMARC/EPRI Report TR-102348, "Guideline on Licensing Digital Upgrades in Determining the Acceptability of Performing Analog-to-Digital Replacements Under 10 CFR 50.59." The package included:

(1) Proposed letter,
(2) Responses to CRGR Charter questions, and
(3) NUMARC/EPRI Report TR-102348

CONCLUSIONS/RECOMMENDATIONS

The CRGR recommended in favor of the proposed letter, subject to several modifications to be coordinated with the CRGR staff. The principal comments included the following:

(1) The letter should make it clear that subject to certain clarifications the staff endorses TR-102348 which describes acceptable means for meeting the requirements of 10 CFR 50.59. This would be similar to the

regulatory position in a regulatory guide and/or similar to the response to question (i) in the CRGR review package. Regulatory guide language should appear on page 1 of the letter as well as in the discussion of the clarifications, on pages 3 and 4 of the letter.

(2) The statement on page 2 which indicates "while these guidelines can be useful... the final determination..." is confusing. It appears that this statement should apply to NSAC-125 rather than TR-102348.

(3) It should be made clear which statements apply to NSAC-125 and which apply to TR-102348.

(4) A Bulletin-like structure, with numbered paragraphs, would be helpful in clarifying the staff's intent with regard to the clarifications.

(5) In discussing the first clarification (system-level malfunctions) it would be helpful to adopt the following approach:

> In making a determination of... under 10 CFR 50.59, the staff would interpret the rule....
>
> With regard to the treatment of systems in TR-102348....

(6) With respect to clarifications in general it would be helpful to adopt the following approach:

> "Here is the 10 CFR 50.59 concern..."
>
> "Here is the TR-102348 clarification..."

(7) On page 3, paragraph 2, sentence 4, after "report," insert the following:

> "that would represent the unreviewed safety question"

(8) With regard to uncertainty, the following 3 cases should be articulated:

a. If the licensee has examined the 10 CFR 50.59 questions and is reasonably certain that the answers are negative, then prior NRC review is not required.

b. If the licensee has examined the 10 CFR 50.59 questions and is not sure the answers are negative, prior NRC review is required.

c. If the licensee has not examined the 10 CFR 50.59 questions, prior NRC review is required.

(9) The paragraph on page 4 of the letter discussing credit for previously approved designs should be deleted.

(10) It may be desirable to combine paragraphs regarding the clarifications.

Enclosure 3 to the Minutes of CRGR Meeting No. 259

Procedures for Handling Comments

July 12, 1994

TOPIC

W. Olmstead of OGC discussed with the CRGR procedures for handling comments received from outside the NRC while the staff is preparing proposed rulemaking and generic correspondence packages.

An example of such a comment letter is provided in an attachment to this enclosure.

CONCLUSIONS/RECOMMENDATIONS

The CRGR reached a general consensus on the following course of action with regard to the example in the attachment:

1. The incoming letter will be placed in the Public Document Room.

2. A determination on whether a specific acknowledgment (response) is appropriate will be made in accordance with normal agency procedures. The CRGR staff will prepare an acknowledgement (response) as appropriate. The members will be informed of the results.

B/
5/14

NEI

NUCLEAR ENERGY INSTITUTE

May 10, 1994

Mr. Edward L. Jordan, Director
Office for Analysis and Evaluation of Operational Data
U.S. Nuclear Regulatory Commission
Washington. D. C. 20555-0001

SUBJECT: Proposed NRC Staff Position on Licensee Required Actions for Cumulative Usage Factors (CUF) Greater Than Unity

Dear Mr. Jordan:

In July 1993, the NRC staff provided NEI (formerly NUMARC) a copy of their Fatigue Action Plan. Phase I, "Short Term Actions," stated that the NRC staff was to develop a position on required licensee actions for the situation when the CUF is greater than unity. Subsequently, we learned that the position is to be issued as a generic communication and that it will be made available for public comment. It is our understanding that the Committee to Review Generic Requirements (CRGR) will be reviewing the proposed position prior to public comment. The Fatigue Action Plan stated this issue "is a subject of controversy." Therefore, we believe providing industry's perspective on this issue could be beneficial to the CRGR deliberations.

Industry has not reviewed the NRC staff's proposed position. Our comments are based on a review of the ASME Code, NRC regulations/guidance, and the relevant technical aspects. It is likely that some of our insights may agree with the NRC staff's recommended position, while others may not.

Based on our review, we urge the CRGR to be mindful of the following points during their deliberations on this issue:

1. The design-basis CUF should not be used as a direct indication of component structural integrity.

ATTACHMENT TO ENC. 3
MEETING NO. 259

2. New NRC rules or guidance are not required.

3. The NRC staff should not be prescriptive on how licensees comply with the existing regulations.

4. The NRC staff position should be formulated in such a manner to avoid needless repair or replacement of components that are safe to operate.

5. The NRC staff should work through the ASME Code consensus process to resolve the "controversy" identified in the Fatigue Action Plan. No immediate public health and safety concerns exist that demand immediate remedial action by the NRC staff.

Our detailed insights are provided in the enclosure.

We hope that these thoughts will be useful during CRGR's deliberation of the proposed position. Furthermore, we hope that CRGR will concur with industry's belief that this issue is addressed optimally through the ASME Code consensus process.

If you or other CRGR members have questions concerning this information, please contact me or Kurt Cozens of the NEI staff.

Sincerely,

William H. Rasin
Vice President and Director,
Technical

WHR/KOC/rs
Enclosure

c: Ashok Thadani, NRC/NRR
Brian Sheron, NRC/NRR
Terence Chan, NRC/NRR

Enclosure

Industry Insights on Cumulative Usage Factor (CUF) Greater than Unity

- A CUF exceeding unity is a very rare occurrence. Therefore, the formulation of a new policy to address such situation is not urgent. Only if the ASME Section III fatigue curves were to be radically revised would instances of CUF exceeding unity occur with regular frequency.

- A CUF greater than unity does not indicate a lack of structural integrity, e.g. that fatigue cracking is present or the component is not safe to operate. Two types of margin exist in ASME Section III fatigue analyses: (1) margin inherent in the ASME Section III fatigue design methods, approximately a factor of three; and (2) margin added by the analyst due to generalized assumptions rather than application of specific inputs. When an ASME Section III fatigue analysis is optimized to remove **all** margin added by the analyst, the structural integrity of the component would still have a margin of approximately three. The robust ASME design margin provides confidence that even if the CUF is greater than one, acceptable component operability could be demonstrated.

- Generic Letter (GL) 91-18 transmitted to industry two NRC inspection manual sections to ensure consistency in NRC staff inspection's. The section on "Operable/Operability: Ensuring the Functional Capability of a System or Component," paragraph 6.14, "Flaw Evaluation," states:

  > "Regulation 10 CFR 50.55a(g) require(s) that the structural integrity of the ASME Code Class 1, 2, and 3 components be maintained according to Section XI of the ASME Code. ... The operability of such systems containing flaws may depend on the flaw characterization or evaluation performed by the licensee and the acceptability of continued service of the component. ... Upon discovery of a flaw exceeding the acceptance standards in IWB-3500 (IWC-3500 for Class 2 components), the licensee should promptly determine operability. The evaluation and acceptance criteria of IWB-3600 may be used in the determination. ..."

  This permits component operation with an existing fatigue flaw, regardless of how the flaw originated (i.e., fatigue, fabrication, etc.), if it can be shown to be stable. Stability is demonstrated by performing a fracture mechanics analysis to confirm that the indication will not grow to a critical size prior to the next ASME Section XI inservice inspection. Note that even though ASME Section III design requirements do not permit cracks or indications of this type during fabrication, ASME Section XI permits their presence during service if they can be shown to be stable. The presence of an indication or crack does not automatically require repair or replacement of the component.

- Flaw tolerance is a fracture mechanics approach that is consistent with Section XI, IWB-3600. It is able to demonstrate component operability when CUF greater than unity, in a manner that is more conservative than the methods prescribed in ASME Section XI. The flaw tolerance approach uses the same methods prescribed in IWB-3600 (IWC-3600), however since no flaw or indication exists, an assumed flaw is used in the analysis to confirm that even if the crack did exist, it would remain stable. The assumed flaw size is selected based on the largest flaw that would not be detected during inspection. Consideration of a postulated crack makes the flaw tolerance approach more conservative than the 10 CFR 50.55(a) endorsed ASME Section XI flaw evaluation method.

- ASME Section XI does not currently provide <u>explicit</u> actions to be taken when CUF greater than unity. ASME Section XI has chartered the Task Group on Operating Plant Fatigue Assessment with developing guidance when CUF greater than unity for Class 1 components. The recommended revisions are currently being developed. Options being considered acknowledge: (1) CUF analysis may be reevaluated per Section III to determine if a refinement of the analysis can demonstrate a CUF less than unity; and (2) the flaw tolerance method as an alternate approach. The prospect for adoption by Section XI of the fatigue guidance appears good. However, industry is concerned that a new NRC staff position may encumber ASME Code development and subsequent NRC staff endorsement.

- As with any question of component degradation, the licensee has the responsibility to assure that the component is safe to operate and will be capable of performing its intended safety function. Because of the lack of a crack and the margin inherent in ASME Section III, a CUF greater than unity results in less of an operability concern than when an actual indication is present and IWB-3600 is invoked . The operability question to be confirmed with CUF greater than unity is whether there will be a structural challenge during future component operation. The question can be addressed with the use of fracture mechanics analyses and/or inspections. This is the approach currently implemented in ASME Section XI. Other approaches may result in components being needlessly replaced before the end of their operable life is expended. Such action would result in unjustified expense to the licensee.

Enclosure 4 to the Minutes of CRGR Meeting No. 259

Scope of CRGR Review

July 12, 1994

TOPIC

On June 15, 1994 the Commission provided a staff requirements memorandum (SRM) indicating that:

1. "... the scope of the CRGR Charter should not be reduced."

2. "... the staff should consider enlarging the scope of review of the CRGR to include proposed generic requirements in the nuclear materials area and recommend a course of action." and

3. "The staff should look at measures which would lessen the time spent on CRGR reviews by individual CRGR members."

A copy of the SRM is provided as an attachment to this enclosure.

CONCLUSIONS/RECOMMENDATIONS

With regard to considering expansion of the CRGR review scope to include proposed generic requirements in the nuclear materials area:

a. The CRGR reached a consensus view that expansion might be desirable from the standpoint of regulatory coherence. However, the cost of expansion appears to be prohibitive, considering the different risks involved with materials issues.

b. It was noted that others, such as the Director of the Office of Nuclear Materials Safety an Safeguards, may provide their own views separately before a decision is made on what to recommend to the Commission.

With regard to looking at measures to lessen the time spent by individual members on CRGR reviews:

a. The CRGR believes it is appropriate to make more frequent use of a negative consent process. (In this process, the CRGR staff reviews a package submitted for CRGR review, summarizes the issues and the staff's responses to the issues and, if appropriate, recommends to the members that further review and discussion at a meeting are not needed. If the members agree, no further review is performed.)

b. In conjunction with negative consent, the CRGR also believes it is appropriate to emphasize reducing the number of dual reviews (i.e., review at both the proposed and final stage).

c. It was noted that more frequent use of negative consent does not reduce the scope of CRGR review.

In a related matter the CRGR had earlier prepared a proposed revision to the CRGR Charter to better reflect the Commission's understanding of the substantial increase criterion of the backfit rule. The CRGR agreed to resubmit essentially the same proposal, now that recommendations for reducing the scope of CRGR review have been decided (in the negative).

ACTION - Jordan, AEOD

UNITED STATES
NUCLEAR REGULATORY COMMISSION
WASHINGTON, D.C. 20555

OFFICE OF THE SECRETARY

June 15, 1944

Cys: Taylor
Milhoan
Thompson
Blaha
Beckjord
Russell
Bernero

ACTION CONRAN
ALLISON
for discussion at next CRGR meeting - expect CRGR members

MEMORANDUM TO: James M. Taylor
Executive Director for Operations

FROM: John C. Hoyle, Acting Secretary

SUBJECT: SECY-94-109 - SCOPE OF REVIEW FOR THE COMMITTEE TO REVIEW GENERIC REQUIREMENTS (CRGR)

The Commission (with Commissioners Rogers, Remick and de Planque agreeing), recognizes the value added by review processes such as that provided by the CRGR and believes that the scope of the CRGR charter should not be reduced. In addition, the staff should consider enlarging the scope of review of the CRGR to include proposed generic requirements in the nuclear materials area and recommend a course of action. The staff should look at measures which would lessen the time spent on CRGR reviews by individual CRGR members.

The Chairman approved the staff recommendation.

cc: The Chairman
Commissioner Rogers
Commissioner Remick
Commissioner de Planque
OGC
OCA
OIG
Office Directors, Regions, ACRS, ACNW, ASLBP (via E-Mail)

SECY NOTE: THIS SRM, SECY-94-109, AND THE VOTE SHEETS OF ALL COMMISSIONERS WILL BE MADE PUBLICLY AVAILABLE 10 WORKING DAYS FROM THE DATE OF THIS SRM

ATTACHMENT TO ENC. 4 MEETING 259.

September 12, 1994

MEMORANDUM TO: James M. Taylor
Executive Director for Operations

FROM: Original Signed by E. L. Jordan
Edward L. Jordan, Chairman
Committee to Review Generic Requirements

SUBJECT: MINUTES OF CRGR MEETING NUMBER 256

The Committee to Review Generic Requirements (CRGR) met on Monday, April 11, 1994, from 1:00 p.m. to 4:45 p.m. A list of attendees at the meeting is attached (Enclosure 1). The following items were discussed at the meeting:

1. The CRGR reviewed the proposed rule for Shutdown and Low Power Operations. The Committee recommended in favor of issuing the proposed rule, subject to a number of modifications (to be coordinated with the CRGR staff) to improve clarity of the package. This matter is discussed in Enclosure 2.

2. The CRGR reviewed the proposed final amendments to 10 CFR Part 26 to protect against the vehicle bomb threat. The Committee recommended in favor of issuing the final rule for implementation, subject to minor clarifi-cations and modifications (to be coordinated with the CRGR staff. This matter is discussed in Enclosure 3.

3. The Committee reviewed a proposed urgent NRC Bulletin, "Potential Fuel Pool Draindown Caused by Inadequate Maintenance Practices at Dresden Unit 1." The Committee recommended in favor of issuing the proposed bulletin expeditiously for implementation, subject several minor modifications (to be coordinated with the CRGR staff).

In accordance with the EDO's July 18, 1983 directive concerning "Feedback and Closure of CRGR Review", a written response is required from the cognizant office to report agreement or disagreement with the CRGR recommendations in these minutes. The response is to be forwarded to the CRGR Chairman and if there is disagreement with the CRGR recommendations, to the EDO for decision making.

Questions concerning these meeting minutes should be referred to James H. Conran (415-6839).

Enclosures: As stated

cc: Next page
Distribution: Next page

CRGR:AEOD	DD:AEOD	C/CRGR:AEOD
JHConran	DFRoss	ELJordan
9/2/94	9/ /94	9/9 /94
	On Travel	

DOCUMENT NAME: MINUTES.256

cc:
Commission (5)
SECY
J. Lieberman, OE
P. Norry, ADM
D. Williams, OIG
K. Cyr, OGC
J. Larkins, ACRS
Office Directors
Regional Administrators, RI, RII, RIII, RIV
B. Grimes, NRR
L. Spessard, NRR
A. Thadani, NRR
M. Virgilio, NRR
CRGR Members

Distribution:
Central File w/encl.
PDR (NRC/CRGR) w/o encl.
CRGR S/F
CRGR C/F
STreby
JMilhoan
MTaylor
REmrit
RBurnett
RJones
CMcCracken
FCongel
RDube
PMcKee
TCollins
MCaruso
AKugler
DAllison
JConran
DRoss
EJordan

Enclosure 1

ATTENDANCE LIST
CRGR Meeting No. 256

April 11, 1994

CRGR Members

E. Jordan
F. Miraglia
G. Arlotto
J. Murphy
J. Moore
W. Kane

CRGR Staff

D. Ross
J. Conran

Ukraine

Nikolai Kouriltchik
Leonid Kortchevoi
Galina Steinberg

NRC Staff

A. Thadani
M. Virgilio
R. Jones
T. Collins
M. Caruso
K. Desai
G. Holahan
C. McCracken
R. Woods
E. Butcher
P. McKee
R. Dube
R. Barrett
J. Greeves
R. Fonner
B. Grimes
S. Weiss
L. Thonus
R. Dudley
A. Kugler
J. Birmingham
J. Austin

NRC Contractors

S. Pope
F. Quinn

Enclosure 2 to the Minutes of CRGR Meeting No. 256

Proposed Rule on Shutdown and Low Power Operations

April 11, 1994

TOPIC

M. Virgilio (NRR), R. Jones (NRR), and M. Caruso (NRR) presented for CRGR review the proposed rule on Shutdown and Low Power Operations. The new rule requires power reactor licensees to (1) provide effective controls to ensure the availability and proper functioning of equipment relied on to perform key safety functions during shutdown and low power (SLP) operations; (2) evaluate realistically the effects of fires during SLP conditions, and take measures as indicated by the evaluation to prevent loss of normal decay heat removal or ensure that alternate decay heat removal capability exists; and (3) provide, in PWRs, reliable instrumentation (including visible and audible indications in the control room) for monitoring reactor coolant system water level during mid-loop operation.

Copies of briefing slides used by NRR and AEOD staff to guide the presentations and discussions at this meeting are provided in the Attachments 1 and 2 to this Enclosure.

BACKGROUND

1. The package submitted for review by CRGR in this matter was transmitted by memorandum, dated March 14, 1994, F.M. Miraglia to E.L. Jordan; the package contained the following documents:

   Enclosure 1 - Draft Federal Register Notice (undated), including statement of considerations and proposed rule;

   Enclosure 2 - Draft Regulatory Analysis, dated December 1993, "..Requirements for Shutdown and Low-Power Operations at Nuclear Power Plants";

   Enclosure 3 - Draft Regulatory Guide (undated), "Shutdown and Low-Power Operations at Nuclear Power Plants";

   Enclosure 4 - Technical Report, NUREG-1449, dated September 1993, "Shutdown and Low-Power Operations at Commercial Nuclear Power Plants in the United States";

   Enclosure 5 - "Response to Requirements for Content of Package Submitted for CRGR Review", (undated).

2. The following additional documents were transmitted to CRGR members by Note, dated April 1, 1944, from the CRGR staff:

a. Letter, dated March 28, 1994, W.H. Rasin, NEI to E.L. Jordan, transmitting comments by NEI on SECY-93-190 (these comments were provided to NRC staff earlier via letter, dated January 11, 1994, to W.T. Russell).

CONCLUSIONS/RECOMMENDATIONS

On the basis of its review of this item, including the discussions with the staff at the meeting, the CRGR recommended in favor of issuing the proposed rule, subject to modification of the draft package to reflect the following comments (to be coordinated with the CRGR staff):

1. The Committee noted that significant criticisms have been directed both from outside and within NRC at the probabilistic analyses presented in support of the proposed action. The staff should ensure that these analyses meet current standards for adequate peer-reviewed probabilistic analyses offered in support of major proposed regulatory actions, in accordance with the Commission's existing policy; and the staff should address all comments received and revise the regulatory analysis, as appropriate, to reflect their evaluation of the comments prior to issuance of any final rule.

   The Committee also felt strongly, however, that the qualitative considerations cited in the regulatory analysis (as summarized in the discussion of decision rationale at pp.34-35 in the draft document) provide adequate justification for going forward with this proposed rule. These qualitative considerations, in particular the continued adverse operating experience relevant to this issue discussed by AEOD staff at the meeting (see Attachment 2), should be highlighted accordingly in the revised rulemaking package that is issued for comment. Because these qualitative considerations are sufficient in themselves to justify this proposed action, the Committee did not object to the staff's plans to issue the package for comment expeditiously without completing at this time revisions to the regulatory analysis that are expected to result from staff's evaluation of comments on the probabilistic supporting analyses. (Comments should be requested specifically on this course of action).

2. The staff acknowledged in the draft package that the proposed approach involving development of detailed technical specification LCO and surveillance requirements may be too restrictive and cause increase in outage durations given that licensees normally inspect, test and maintain a large amount of equipment during shutdown operations. Accordingly, the staff had already intended to request comment on a possible alternative approach for achieving the objectives of the proposed rule by addressing equipment availability during SLP operations with a configuration control program that is controlled administratively through the administrative controls portion of the technical specifications or the outage plan. CRGR believes that explicit provision for such a program in the administrative tech specs would be acceptable, and

that such an alternative would likely be preferable, in that it would be more compatible with significant initiatives already undertaken by the industry to address SLP concerns, and could be administered in a manner that recognizes and credits the improvements already achieved by effective implementation of those initiatives by individual licensees. It would also be consistent with the Commission's objective of issuing performance-based, rather than prescriptive, requirements where practicable.

The Committee recommended, therefore, that the package be revised to expand upon and highlight such an alternative approach, and that this alternative should be further developed and presented as an equal option (rather than a footnoted afterthought) in the package issued for comment. The revised package should acknowledge explicitly the significant improvements in outage planning already achieved as a result of ongoing efforts in this area by INPO, EPRI, and NUMARC (NEI), in particular the formal NUMARC 91-06 initiative. The revised package should emphasize that NRC's objective in this proposed action is to put a regulatory footprint in this area, i.e., to set minimum standards for control of SLP operations (supplementing, where needed, the industry's initiatives/guidance in this area), and ensure uniform implementation of these standards by all licensees so that the full benefit of industry's initiatives is realized and maintained. As a specific point, the provisions in the new rule for realistic evaluations and contingency planning measures relating to control of SLP fire hazards, and for reliable mid-loop instrumentation (for PWRs), should be presented more clearly in context, i.e., as requirements directed to areas of SLP operations control not addressed explicitly or effectively by the industry initiatives.

3. The staff made clear in the discussions with the Committee at the meeting that it is <u>not</u> the staff's intent to extend the Appendix R philosophy and fire protection approach to apply to cold shutdown conditions and operations; however, the wording of the draft package is not clear enough on this important point. The treatment of the proposed new SLP fire protection provisions in this package should be revised to remove any ambiguities in that regard and to make completely clear what is intended, i.e., <u>realistic</u> evaluations of SLP fire hazards to identify vulnerabilities (or windows of vulnerability) during outages, and improved planning that takes into account the results of such evaluations and reasonably assures the availability and proper functioning of decay heat removal capability when a plant is in cold shutdown. Consideration of the time dependence of both decay heat levels in the core and combustible loadings in work areas was discussed as illustrative examples of realistic factors that could be taken into account by the licensee in such evaluations. The Committee felt it would be useful to emphasize this point in the revised package. Also, inspection guidance should be developed to assure that this new requirement is administered uniformly as intended.

4. With regard to the proposed requirement (for PWRs) relating to reliable instrumentation for monitoring RCS water level during mid-loop operations, the Committee clarified specifically in the discussions with the staff at the meeting that the reference to "diverse" instrumentation (at p. 13 of the draft Regulatory Analysis) is in error. Diversity is not necessary to achieve the degree of reliability intended by the staff for mid-loop instrumentation; any such reference in the draft package is purely inadvertent and will be corrected when the Regulatory Analysis is published in final form.

5. To supplement the preceding general recommendations for improvement of the rulemaking package, the following specific changes were discussed and agreed to by the staff at this meeting:

   a. Draft FRN, p.17, proposed requirement (c)(1):

      i. Revise the existing language of this section to relate more clearly to the actual problems or concerns that gave rise to the proposed rule, e.g.:

         "Assure that uncontrolled changes in coolant inventory, subcooling, and core reactivity do not occur when the plant is in a shutdown or low power condition."

      ii. Add to (c)(1) a provision that also addresses availability of containment, when needed, e.g., :

         "Assure that containment is maintained, or can be reestablished in a timely manner as needed, to prevent radioactive releases in excess of Part 100 limits."

   b. Draft FRN, pp.2-3, proposed requirement (c)(2):

      Restate the proposed requirement as follows;

      i. Identify equipment (including electric power and compressed air) that will be relied on during SLP operations to make the reactor subcritical or critical, maintain the reactor subcritical in a shutdown condition, maintain reactor coolant inventory and makeup capability, remove decay heat from the reactor, monitor reactor vessel water level, and maintain or reestablish containment;

      ii. Establish controls for the equipment identified in (b)(i) in plant technical specifications (i.e., either detailed LCOs and surveillance requirements, or in the administrative portion of the TS) to ensure that the identified equipment

will perform its function when the plant is in a shutdown or low power condition. (Retain unchanged the language regarding "...sufficient redundancy of SSCs to ensure...".)

c. Draft FRN, p.18, proposed requirement (c)(3):

Simplify and clarify the intent of proposed requirement as follows:

i. Remove the detailed guidance in the second and third sentences from the rule, and move it to the Reg. Guide;

ii. Restate the remaining provisions of this section to indicate more clearly that the intent is simply to identify, and deal with in a reasonable and effective manner, the fire-related vulnerabilities that can arise as a result of the type and complexity of activities normally conducted during cold shutdown and refueling outages, and the working conditions typically associated with them; e.g.:

"Evaluate realistically the fire hazards and available fire protection features projected for operations to be conducted during planned cold shutdown or refueling outages, and determine whether fires occurring during such outages could prevent accomplishment of the normal decay heat removal function. If so, the licensee must take measures to prevent loss of normal DHR capability, or have a contingency plan to ensure that an alternate DHR capability exists. The plan must describe generally the procedures to initiate that capability; and plant staff must be trained to implement the contingency plan."

iii. Make clear that major departures from an approved outage plan that might result from unanticipated circumstances encountered during the outage must also be evaluated in the manner described in ii.

d. Draft FRN, p.19, under "Implementation":

Reconsider whether "procedures" (or "plans") developed by the licensee for control of SLP operations must be submitted to NRC for review, as is strongly suggested by the current wording of proposed requirement (d)(1). Also, as a general related point, this section of the rule should be restructured for clarity to address separately the required schedules for installation of modifications, submittal of technical specification amendments, and overall compliance with the new rule.

[Conforming changes should be made in other parts of the draft FRN (e.g., at pp.1, 7, 9, 10, and 11) and throughout the remainder of the draft package, to reflect the changes specified in 5.a through 5.d above and in related Recommendations 2 and 3 preceding.]

e. Draft FRN, p.5, under "Safety Importance":

To more clearly indicate that the qualitative considerations cited in the staff's analysis are by themselves considered adequate justification alone for this proposed action (as discussed in Recommendation 1), insert at the beginning of this section the discussion given in the draft Reg Analysis under "Decision Rationale" (pp.34-35).

f. Draft FRN, p.6, second sentence from bottom:

Insert the word "potential" following the words "..dominant event sequences indicate..".

g. Draft FRN, p.7, last sentence in the first paragraph:

Replace the word "representative" with "potential".

h. Draft FRN, p.9, subitem (6):

Revise the wording of this subitem to emphasize that operating experience continues to show problems in maintaining the ability to control RCS water level during draindown and steady-state (SLP) operations. Also, delete the references here to poor procedures, poor training, and poor planning to focus more clearly (in this subitem) on the principal contributor to such operating events, i.e., poor instrumentation. Reexamine wording in other parts of the draft package and make conforming changes throughout, as appropriate, to reflect this important point consistently.

j. Draft FRN, p.17, proposed requirement (c)(1):

The staff should make clearer exactly what is intended by the phrase "...plant is not producing electric power..." in the SLP context. The term is not explicitly defined in the "Definitions" section of the draft rule, as are other states that are referred to in the body of the rule (e.g., "cold shutdown", refueling condition", "midloop operation); and the intended meaning is not completely clear from context, as written.

k. Draft FRN, p.17:

In rewriting proposed requirement (c)(2) in accordance with other recommendations preceding, strike the words "...in the event of an accident or fire." following the words "...maintain or reestablish containment integrity..."

1. Draft Regulatory Analysis, p.5, second paragraph:

   In the sixth sentence, replace the word "imposed" with "implemented".

BACKFIT AND SAFETY GOAL CONSIDERATIONS

The proposed action is considered a safety enhancement backfit that is sufficiently justified on the basis of qualitative considerations cited in the staff's analysis of this issue, chief among them being the continuing adverse operating experience in SLP operations. A probabilistic quantitative analysis was also prepared in support of the proposed rule; and the results of that analysis indicate (subject to significant uncertainties) that the backfitting involved will provide improvements in core melt frequency greater than 10E(-5)/year/plant, which would provide justification for this action in accordance with the current safety goal implementation guidance. The staff is evaluating comments received that question the adequacy and conclusions of the quantitative analysis and will address those comments in the final rulemaking package.

PROPOSED GENERIC REQUIREMENTS REGARDING SHUTDOWN OPERATIONS

MEETING OF THE COMMITTEE TO REVIEW GENERIC REQUIREMENTS APRIL 11, 1994

File Copy
MTG 252
4/11/94

Attachment 1
to Enclosure 2

DIVISION OF SYSTEMS AND SAFETY ANALYSIS
OFFICE OF NUCLEAR REACTOR REGULATION

RULEMAKING FOR SHUTDOWN OPERATIONS

BACKGROUND

- STAFF BRIEFED COMMISSION 07/20/93
  - REQUIREMENTS UNDER CONSIDERATION
  - RULE VERSUS GENERIC LETTER APPROACH

- STAFF RECOMMENDED RULEMAKING BECAUSE CURRENT REGS INCOMPLETE AND RULE IS LEGALLY BINDING

- COMMISSION PAPER SUBMITTED (SECY-93-190) WHICH INCLUDED PRELIMINARY REGULATORY ANALYSIS

- PROPOSED RULE FOR COMMENT SUBMITTED TO CRGR FOR REVIEW (MARCH 1994)

PROPOSED GENERIC REQUIREMENTS
SUMMARY

OUTAGE PLANNING AND CONTROL

- REQUIRE LICENSEES TO PLAN AND CONTROL ACTIVITIES IN A WAY THAT PROVIDES REASONABLE ASSURANCE THAT SAFETY FUNCTIONS WILL BE MAINTAINED

TECHNICAL SPECIFICATIONS OR ADMIN CONTROLS

- REDUNDANT DHR, ECCS, EDG WHEN REFUELING CAVITY NOT FILLED (PWR & BWR) (INCLUDING REDUNDANT SUPPORT SYSTEMS)

- PWR CONTAINMENT INTEGRITY WHEN DECAY HEAT HIGH OR NORMAL DHR UNAVAILABLE

INSTRUMENTATION

- PWRs ADD ~~DIVERSE~~ LEVEL INDICATION FOR MID–LOOP

No
Not necessary
or intended
by staff in rule

RECENT OPERATING EXPERIENCE
SHUTDOWN OPERATIONS

- ENTRY INTO MID-LOOP OPERATION WITH DEGRADED RHR PUMP AT CATAWBA 1 (12/11/93)
- LARGE UNDETECTED NITROGEN GAS BUBBLE IN RCS DURING EXTENDED COLD SHUTDOWN AT SEQUOYAH 1 (12/17/93)
- HYDROGEN BURN IN EMPTY PRESSURIZER CAUSED BY WELDING DURING COLD SHUTDOWN AT SURRY 1 (2/3/94)
- LOSS OF ONE TRAIN OF RHR TWO DAYS AFTER SHUTDOWN DUE TO OUTAGE ACTIVITIES AT HATCH 1 (3/17/94)

REGULATORY ANALYSIS

BASIS FOR REQUIREMENTS

- TRADITIONAL NRC SAFETY PHILOSOPHY OF DEFENSE-IN-DEPTH
- ENGINEERING ANALYSIS (e.g DHR capability, time to RCS boiling, containment pressurization, source term calculations)
- COMPARISON TO REQUIREMENTS FOR POWER OPERATION
- IMPROVEMENTS DIRECTED AT PROBLEMS REPEATEDLY OBSERVED IN OPERATING EXPERIENCE
- COST-BENEFIT ANALYSIS INDICATING SAFETY ENHANCEMENTS ARE COST-JUSTIFIED (safety justified?)

SHUTDOWN RISK PROGRAM

FUTURE ACTIONS

- ACRS MEETING ON PROPOSED RULE (EARLY MAY 1994)
- FOLLOWING COMMISSION, CRGR AND ACRS APPROVAL ISSUE PROPOSED RULE FOR PUBLIC COMMENT (JUNE 1994)
- RESPOND TO NEI COMMENTS ON SECY 93-190
- CONDUCT MEETING WITH INDUSTRY AND PUBLIC TO RECEIVE COMMENTS ON PROPOSED RULE
- ISSUE FINAL RULE WITH APPROVAL OF ACRS, CRGR AND COMMISSION (MAY 1995)

RESPONSE TO NEI COMMENTS
PROPOSED APPROACH

- SEND LETTER IN PARALLEL WITH ISSUANCE OF RULE FOR COMMENT
  - CONFIRM THAT STAFF WILL CONSIDER THEIR COMMENTS
  - HIGHLIGHT CHANGES SINCE SECY 93-190, I.E PERFORMANCE BASED REQUIREMENT ON OUTAGE ACTIVITIES AND ALTERNATE APPROACHES TO CONTROLLING EQUIPMENT
  - REQUEST THEY FOCUS COMMENTS ON CRGR PKG TO CHANGES SINCE SECY 93-190

G. Holahan - AEOD
Meeting 256
9/11/94

PB040794 4/7/94

Precursor Initiator Events occuring at Plant Shutdown
(Equipment Unavailability Events Excluded)

DVS-Besse 1, 4/19/80, 346/80-029, Head Detentioned, CB trip lost 2 essential busses, lost RHR, CCDP = 1.4E-3, DHR unavailable for ~ 2.5 hours, Reactor Coolant temp increased from 90F to 170F.

Sequoyah 1, 2/11/81, 327/81-021, Cold Shutdown, op error opens 3 vlvs, RCS blows down thru RCS & Containment Spray, RHR lost. Op assumed LOCA occured and tripped RC pump, containment evacuated, draining of RCS occurred. CCDP = 8.7E-4

Susuahanna 1, 2/3/90, 387/90-005, Fault on RPS bus caused loss of shutdown cooling (suction valve closed). RCS temp rose to 252 F, Suppression pool cooling used, CCDP = 4.1E-5

Vogtle 1, 3/20/90, 424/90-006, LOOP and both DG inoperable at RCS mid-loop, CCDP = 9.7E-4

Pilgrim 1, 10/30/91, 239/91-024, Severe storm caused shutdown, subsequent LOOP, CCDP = 1.2E-4

In addition to the above, there were five other accident initiator events that occured at shutdown, but were evaluated by postulating that they had occured at power (i.e. CCDP x .75 = at power CCDP)

1976, Haddam Neck, Total loss of 115KV Station power (LOOP), CCDP = 1.4E-3 x .75 = 1.1E-3

1978, C. Cliffs 1, DG fails to start following LOOP in shutdown, CCDP = 6.4E-3 x .75 = 4.8E-3

1978, St Lucie 1, LOOP during refueling, CCDP = 5.7E-3 x .75 = 4.3E-3

1978, Ft Calhoun 1, Both PORVs open during troubleshooting, LOCA CCDP = 2.5E-4 x .75 = 1.9E-4

1987, Pilgrim 1, LOOP from Severe storm (~14 hours), CCDP = 3.9E-4

Definition: "Shutdown" means cold shutdown or refueling. Hot shutdown is considered to be at power.

Attachment 2
to Enclosure 2

PRECURSOR DESCRIPTION AND DATA

NSIC Accession Number: 158860

Date: April 30, 1980

Loss date not edate

Title: Loss of Two Essential Buses and Loss of Decay Heat Removal Capability at Davis-Besse 1

The failure sequence was:

1. The reactor was in cold shutdown in preparation for refueling with the following equipment/system status:
   a. the head was detensioned but not removed (water level below the vessel flange)
   b. decay heat was being removed using decay heat pump No. 2
   c. decay heat pump No. 1 was out of service for maintenance with its associated piping drained
   d. the manway covers on the top of the steam generators had been removed.
2. The unit electrical lineup had been revised in preparation for work on buses "A" and "C". Buses E2 and F2 were supplied from breaker HBBF2. Essential distribution panels Y1 and Y3 were on their alternate feed (YBR) which is supplied by F2.
3. The ground fault relay on breaker HBBF2 actuated (possibly due to vibration caused by construction personnel in the switchgear room) and tripped the breaker.
4. This deenergized essential distribution panels Y1 and Y3, which resulted in full SFAS actuation in levels 1 through 5.
5. The SFAS actuation isolated the RCS letdown line and caused the suction of decay heat removal pump No. 2 to transfer to the emergency sump. During the time the BWST outlet valves and emergency sump outlet valves were stroking, water gravity flowed into the emergency sump (approximately 1500 gallons). The decay heat pump was injecting BWST water into the RCS and increased RCS inventory approximately 3500 gallons. (The high pressure injection pumps and containment spray pump breakers had been racked out as required and hence did not actuate).
6. The closing of the BWST outlet valve caused the decay heat pump to draw suction from the emergency sump which resulted in air being drawn into the pump suction. The pump was shut down to stop the injection and to prevent pump damage due to loss of suction.
7. The emergency sump valves were closed and power was removed from their operators. Decay heat removal loop No. 2 was refilled from the BWST, vented, and returned to service. The electrical lineup was restored with buses E2 and F2 separated.
8. Decay heat removal was unavailable for approximately 2-1/2 hours. During that time interval, reactor coolant temperature increased from 90°F to 170°F.

Corrective action:

Plant procedures have been revised to ensure power is removed from the emergency sump valves during mode 5 and mode 6 operation.

The instrument ac system procedure was revised to allow inverters to be supplied from the dc bus when the normal feed for the regulated rectifiers from motor control centers E12A or F12A are to be deenergized.

Design purpose of failed system or component:

The uninterruptable buses provide a continuous source of power to control and instrumentation circuitry which cannot tolerate short term power interruptions.

Reactor in cold shutdown with head detensioned, steam generator manway covers removed, and DH pump #1 out of service for maintenance with its loop drained (DH pump #2 in operation)	Unit electrical lineup revised in preparation for maintenance. Buses E2 and F2 supplied by breaker HBBF2. Essential distribution panels Y1 and Y3 on alternate feed from F2	Ground fault relay on breaker HBBF2 actuates due to vibration, tripping breaker	Deenergized distribution panels Y1 and Y3 cause level 1-15 SFAS actuation, which transfers suction from RCS to emergency sump	Emergency sump valves not locked out. Stroking emergency sump and BWST valves results in gravity flow of BSWT water into emergency sump. Open emergency sump valves and closed BWST valve result in air being drawn into pump suction	Operator trips decay heat pump	Emergency sump valves closed and power removed from operation. Decay heat loop #2 refilled from BWST, vented, and returned to service	Potential Severe Core Damage

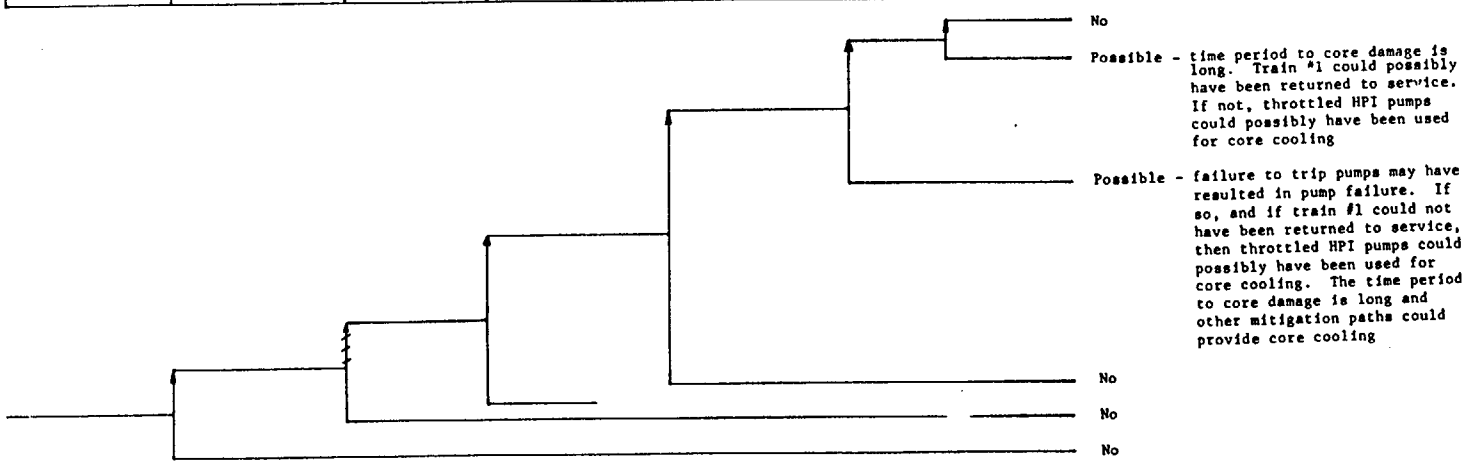

NSIC 158860 - Actual Occurrence for Loss of Two Essential Busses and Loss of Decay Heat Removal Capability at Davis-Besse 1

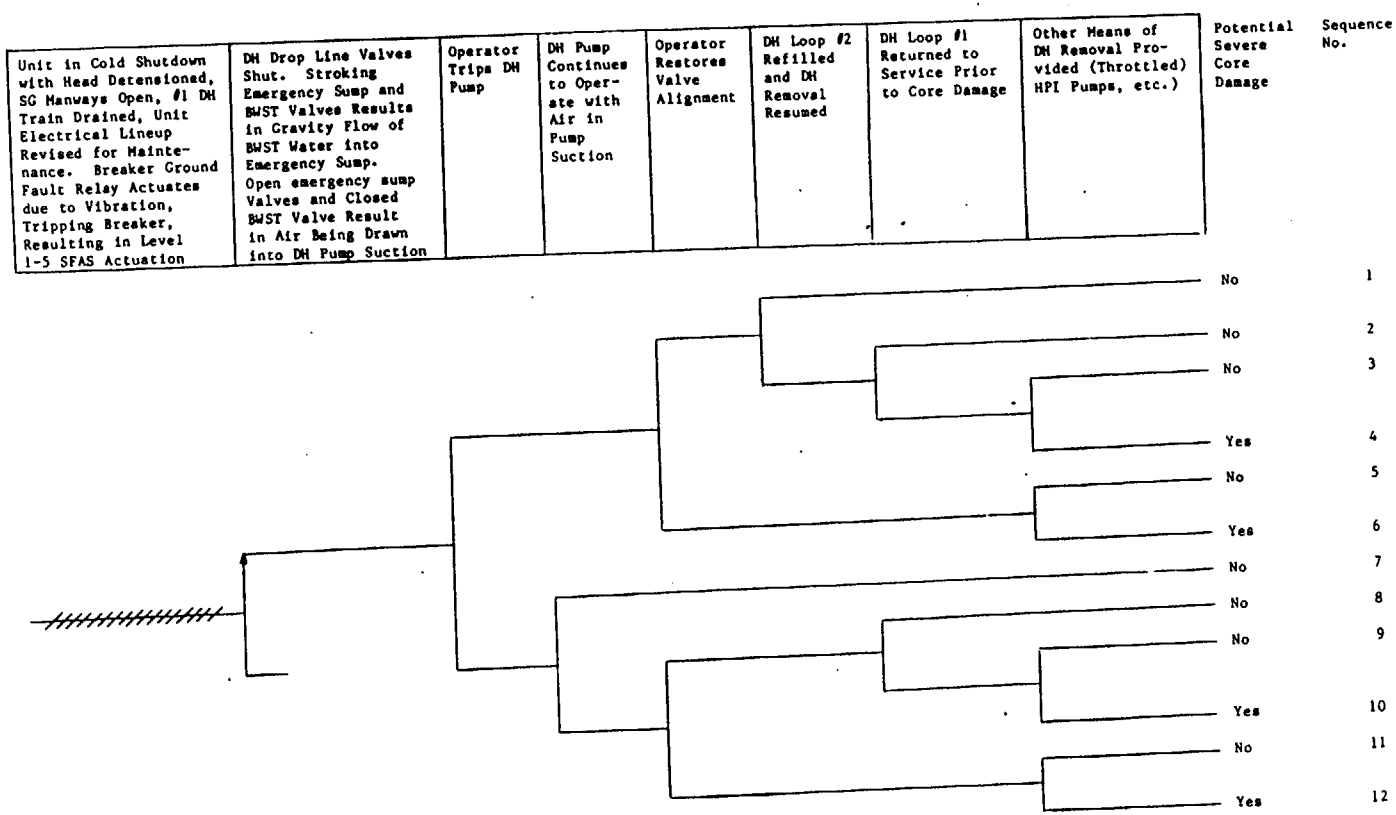

NSIC 158860 - Sequence of Interest for Loss of Two Essential Buses and Loss of Decay Heat Removal Capability at Davis-Besse 1

PRECURSOR DESCRIPTION AND DATA

NSIC Accession Number: 167611

Same Date not Estd

Date: June 30, 1981

Title: Inadvertent Spray Initiation and Draining of Reactor Coolant System at Sequoyah 1

The failure sequence was:

1. The unit was in cold shutdown on RHR train and preparing to bring RHR train B on line.
2. To effect this, the unit operator sent an assistant unit operator (AUO) to open locally operated valves 1-HCV-74-37 and 531. Because the RHR containment spray valve 1-FCV-72-40 had been tested for operability earlier in the day, the auxiliary unit operator was also instructed to check it for closure.
3. A later telephone conversation between the unit operator and auxiliary unit operator apparently confused the AUO regarding the valves to be opened, and he opened all three valves which resulted in initiation of containment spray.
4. The RCS began to blow down through the B RHR train and spray line to the containment.
5. RCS pressure and pressurizer level decreased rapidly.
6. The operators, believing a LOCA had possibly occurred, tripped the operating RC pumps.
7. The containment was evacuated.
8. Standard emergency (LOCA) procedures were implemented:
   a. containment purge was terminated,
   b. the charging pumps were aligned to the RWST,
   c. RHR suction valve to the RWST was opened.
9. Pressurizer level began to increase.
10. Forty three minutes after the event began, the operators learned that the AUO had opened the spray valves and verified its being open from the control board indicators. The valve was closed and the RCS stabilized.
11. During the event, approximately 105,000 gallons of water had been sprayed into the containment; 40,000 gallons from the RCS and 65,000 gallons from the RWST.

Corrective action:

An extensive initial investigation subsequently resulted in the following actions:

1. In order to clarify the duties and responsibilities of the shift employees including the shift engineer, the structure of the operating shift was revised and issued. The general responsibilities and authorities of each position are described in the job description provided to the individuals when they are appointed to the position. Administrative Instruction AI-2 has been revised to describe the responsibilities and authorities of each operating station.

2. In order to improve communications between shift personnel and between shift personnel and management, clearer lines of communication were provided between operating positions within a shift as well as between operating shifts and other sections by revising the shift structure, clarifying the communication paths, establishing work location routines, improving the maintenance of telephones, and investigating additional or different radio communications.
3. The environment in the main control room was improved by closer supervision and compliance with established policies regarding conduct, access, and housekeeping.
4. The Assistant Superintendent and Operations Supervisor met with each shift crew before restart to emphasize the conduct required by AI-2. These discussions stressed clear communications, control room atmosphere, authorities and responsibilities of operating personnel, and status control of safety-related systems. Discussions were also held with all key supervisors emphasizing the requirements to keep the shift engineer informed of work in progress and his responsibility to keep control of activities affecting safety.
5. An in-plant on-the-job training and certification system of nonlicensed operating personnel was established.
6. All future nonlicensed operating employees will, upon assignment to Sequoyah, receive on-the-job break-in training and examinations before assuming responsibility for any job position. A Sequoyah Standard Practice describing this break-in was issued and implemented.
7. In order to ensure that only qualified employees are assigned to perform functions that can affect the safety of operations, TVA evaluated nonlicensed operating employees, specifically the assistant unit operators and fourth-period student operators, to determine each individual's qualifications and competence in regard to performing operating functions that can affect the safety of operations. The result of this evaluation is a qualification status list which reflects the spectrum of nonlicensed operating personnel's operating experience at Sequoyah. This list will be used to fill vacant shift positions.

Design purpose of failed system or component:

The spray system provides water to the containment atmosphere for containment depressurization and radionuclide scavenging. The RHR system provides core cooling during plant shutdown.

Reactor at cold shutdown with RHR train A in operation	Assistant unit operator sent to open RHR train B valves 1-HCV-74-37 and -531 to prepare for starting train B and to check closed containment spray valve 1-FCV-72-40	After opening RHR valves, AUO opened spray valve in lieu of checking it closed, initiating containment spray through RHR system	Rapid RCS pressure and pressurizer level decrease results in initiation of LOCA emergency procedure	Charging pumps aligned to RWST; RHR suction valves to RWST opened	Spray valve discovered opened and closed	Potential Severe Core Damage

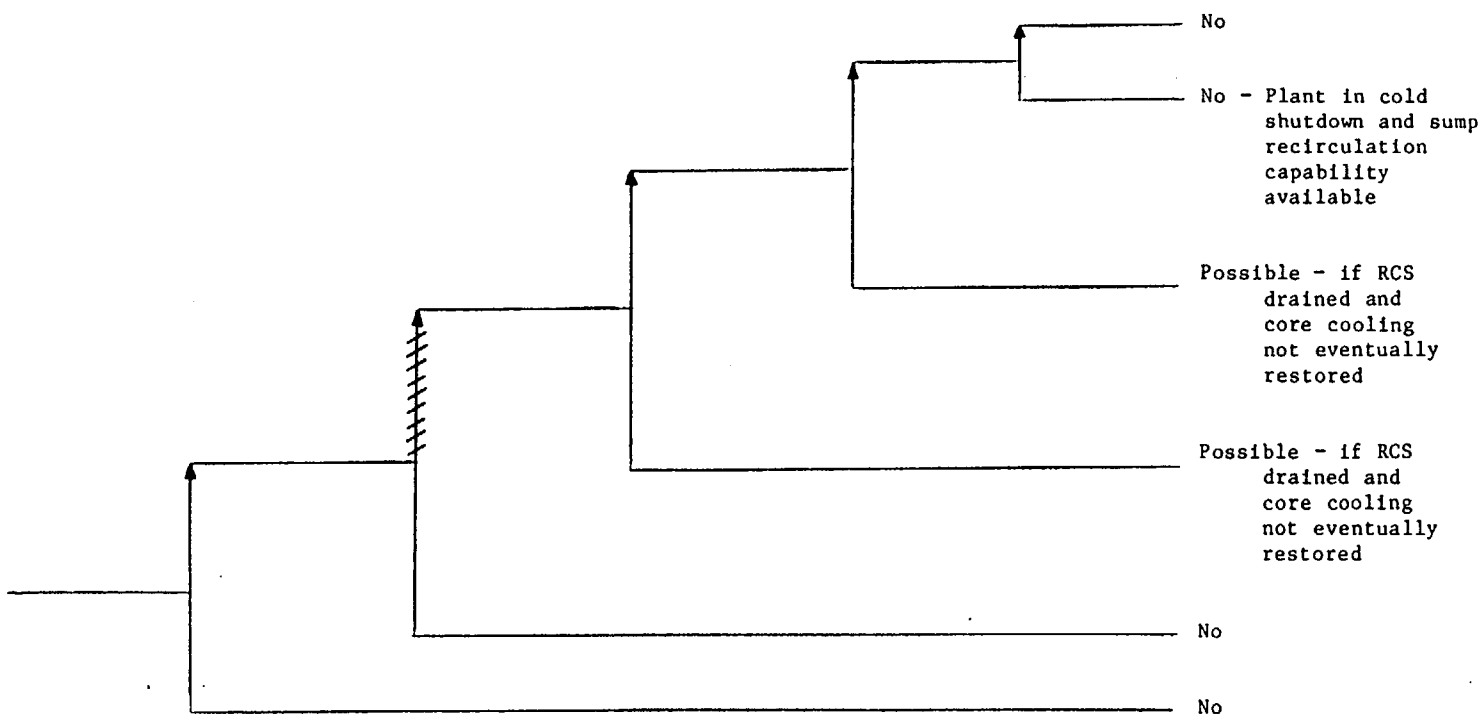

NSIC 167611 - Actual Occurrence for Inadvertent Spray Initiation and Draining of Reactor Coolant System at Sequoyah 1

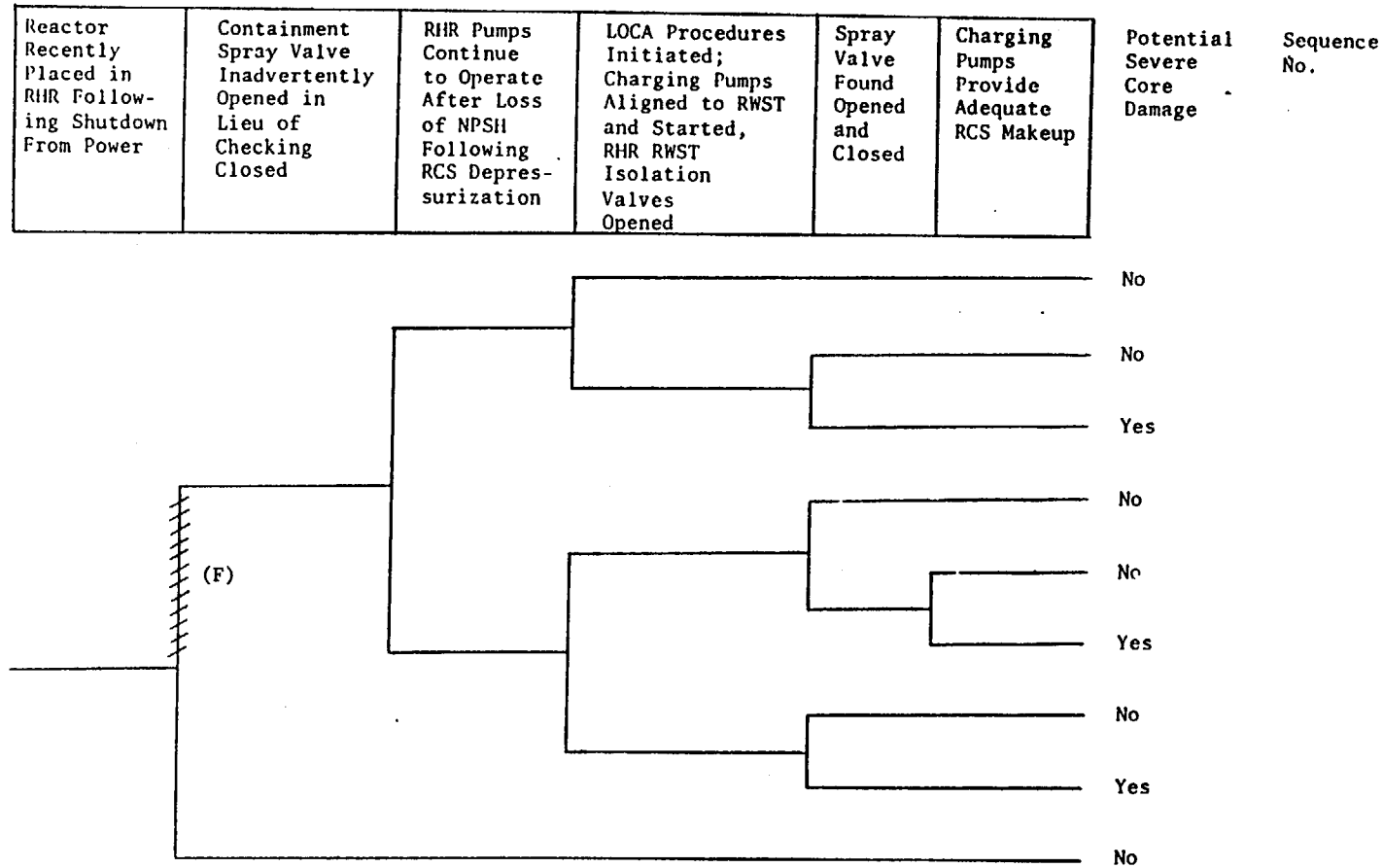

NSIC 167611 - Sequence of Interest for Inadvertent Spray Initiation and Draining of Reactor Coolant System at Sequoyah 1

ACCIDENT SEQUENCE PRECURSOR PROGRAM EVENT ANALYSIS

LER No.: 293/91-024, 293/91-006, 293/91-021, 293/91-025
Event Description: Loss of offsite power and RCIC trip
Date of Event: October 30, 1991
Plant: Pilgrim

Summary

A loss of offsite power (LOOP) occurred at Pilgrim 2-1/2 h after the plant was shut down during a storm. Both emergency diesel generators (EDGs) started and powered the safety-related buses. Reactor core isolation cooling (RCIC) was manually started but tripped on overspeed when opening of the discharge isolation valve was delayed. Four min later, the RCIC inverter tripped because of a voltage transient caused by the start of a residual heat removal (RHR) pump. The inverter was reset in the control room, and RCIC operability was restored.

The conditional core damage probability estimated for this event is 1.2×10^{-4}. The relative significance of this event compared to other postulated events at Pilgrim is shown below.

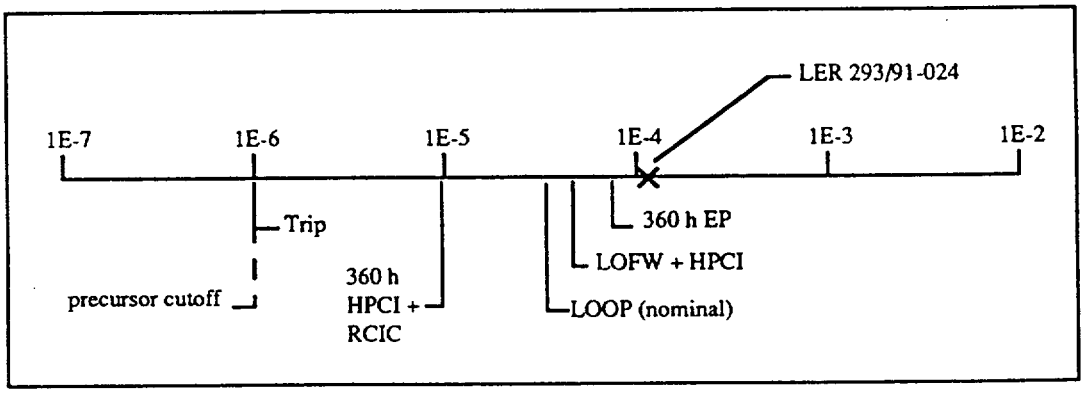

Event Description

The reactor was shut down in response to severe storm conditions at 1710 hours on October 30, 1991. The main condenser vacuum had become degraded due to the storm wind and tide conditions in which seaweed was carried over from the intake structure onto the main condenser tubesheets. Reactor power was reduced to backwash the main condenser.

At 1942 hours, preferred offsite 345-kV power was lost, resulting in loss of the station startup transformer. A flashover had occurred on an insulator column on air circuit breaker (ACB) 104 due to salt deposit buildup on the insulator (see Fig.1). This caused ACBs 103, 104, and 105 to trip open, thereby deenergizing one of the two lines providing preferred offsite power. The second line was deenergized when ACB 102 tripped open in response to operation of relay 62/5, which is a time delay relay designed to respond to a stuck ACB 105. The operation of relay 62/5 was false since ACB 105 had opened as required by design. The cause of the ACB 105 stuck-breaker relay operation is unknown but is speculated to be either a random signal or self-excitation of the breaker through electrical noise coupling.

EDGs A and B started automatically following the loss of preferred power and successfully reenergized emergency buses and related AC-powered load center buses, motor control centers, and distribution panels. Eleven minutes after the loss of preferred offsite power, the secondary source of offsite power was lost when a storm-damaged tree fell onto the 22-kV line serving the shutdown transformer.

Following the loss of preferred offsite power, the RCIC turbine pump tripped due to mechanical overspeed. This resulted when the operator failed to open the RCIC injection valve promptly following the opening of the turbine steam inlet valve. Without a coolant flowpath for the RCIC, the turbine tripped within 4 s of actuation. The operator initially started to open the full flow test valve, realized this mistake, and closed the valve. This delayed the manual opening of the injection valve. In addition, the simulator allows ~15 s to open the valve before RCIC trip compared to 4 s on the plant.

The operator reset the turbine trip and manually restarted the RCIC. Four minutes after the initial RCIC trip, start of an RHR pump resulted in an overvoltage trip of the RCIC system inverter. The RHR pump start caused an AC voltage transient, which caused a DC voltage transient of 152.5-VDC on the 125-VDC system. This exceeded the inverter overvoltage setpoint of 150-VDC and tripped the inverter. Inability of the 125-VDC battery chargers to adequately regulate DC output under AC transient conditions resulted in the output overvoltage. The inverter trip prevented RCIC from attaining rated flow. The operators responded by manually shutting down the RCIC, resetting the inverter, and successfully restarting the system. The duration from the initial overspeed trip to successful resumption of the RCIC function was 5 min.

Two hours after the loss of preferred offsite power, the startup transformer was returned to service when ACB 102 was manually closed following a switchyard inspection and re-energization of a 345-kV line. The shutdown transformer was restored about 2.25 h after initial loss of secondary offsite power.

Additional Event-Related Information

Pilgrim 1 is a BWR with a Mark I pressure suppression containment. The unit has two dedicated diesel generators, two 125-V and one 250-V batteries. Fig. 1 shows the preferred offsite 345-kV power distribution system at Pilgrim.

The RCIC mission is to provide reactor coolant makeup during vessel isolation. The RCIC inverter converts 125-VDC to 120 VAC to power the RCIC flow control circuit and the test circuit power supply. With the inverter tripped, the RCIC can both start and continue to operate, but at minimum speed. The RCIC inverter can be reset and RCIC restored from the control room.

The source 125-VDC bus for the inverter is energized by a 125-VDC battery in parallel with a backup battery charger. The main battery charger, at the time of the event, was inoperable. The backup charger, by design, is required only to maintain the charging voltage within 0.5% from no load to full load with an AC supply voltage variation of 10%. The transient conditions encountered in the event were not addressed in the design specifications.

LER 293/91-006 reports a combined RCIC and HPCI trip due to inverter trips during a recirculation pump start. The pump was being started after an earlier lockout of one of the 4160-VAC emergency buses (see LER 293/91-005). Both inverters were reset in 9 min from the control room.

LER 293/91-021 described a change to an alarm response procedure, which specified required operator actions if the RCIC inverter trips. An extension of the 7-d RCIC system Limiting Condition for Operation (LCO) to 97 d had been requested by the utility on October 24, 1991, to allow testing to be conducted and modifications to be implemented to address the inverter problem. However, as a result of the October 30, 1991, event, RCIC inverter problems were to be resolved prior to startup.

Experience of multiple RCIC overspeed trips in transient conditions exists also at Pilgrim (see LER 293/90-013).

ASP Modeling Assumptions and Approach

The event has been modeled as a severe weather-related LOOP with RCIC unavailable but recoverable from the control room. A nonrecovery probability of 0.08 was assigned to RCIC. This addressed the potential for in-control-room recovery [p(nonrecovery = 0.04)] from the two separate and unrelated RCIC unavailabilities that occurred during the event. The probabilities used for LOOP nonrecovery in the short-term and LOOP nonrecovery prior to battery depletion were also revised to reflect values associated with a

severe weather-related LOOP (see ORNL/NRC/LTR-89/11, *Revised LOOP Recovery and PWR Seal LOCA Models*, August 1989).

Analysis Results

The conditional core damage probability estimated for the event is 1.2×10^{-4}. The dominant sequence, highlighted on the following event tree, involves a LOOP with failure of emergency power and failure to recover AC power prior to battery depletion. The recoverable unavailability of RCIC did not significantly contribute to the core damage probability associated with the event.

Additional information concerning an associated event is included in LER 293/90-013 (see NUREG/CR-4674, Vol. 13).

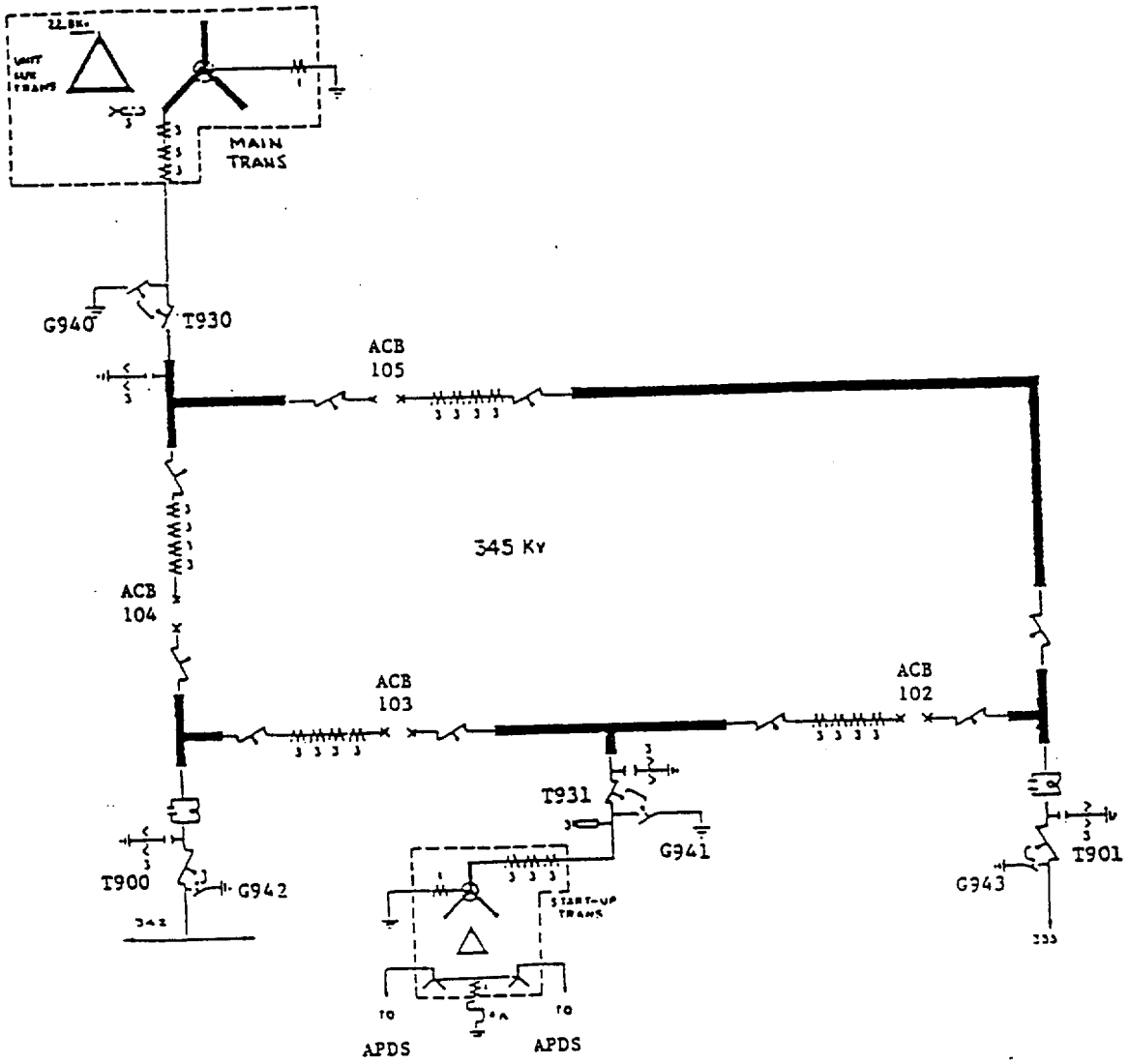

Fig. 1. Pilgrim 345-kV distribution system

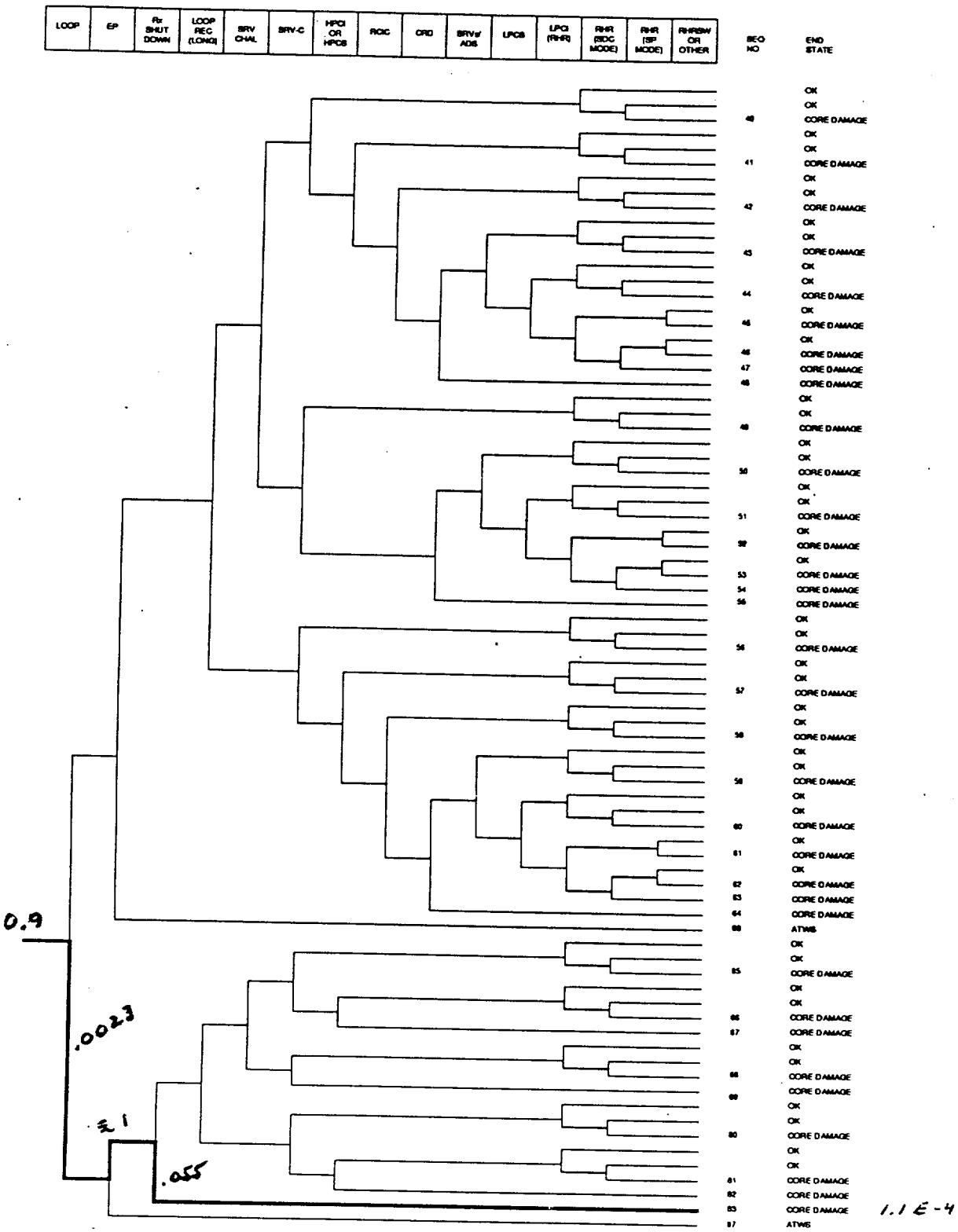

Dominant core damage sequence for LER 293/91-024

CONDITIONAL CORE DAMAGE PROBABILITY CALCULATIONS

Event Identifier: 293/91-024
Event Description: Loss of Offsite Power and RCIC trip
Event Date: 10/30/91
Plant: Pilgrim 1

INITIATING EVENT

NON-RECOVERABLE INITIATING EVENT PROBABILITIES

LOOP	9.0E-01

SEQUENCE CONDITIONAL PROBABILITY SUMS

End State/Initiator	Probability
CD	
LOOP	1.2E-04
Total	1.2E-04
ATWS	
LOOP	2.7E-05
Total	2.7E-05

SEQUENCE CONDITIONAL PROBABILITIES (PROBABILITY ORDER)

	Sequence	End State	Prob	N Rec**
83	LOOP emerg.power -rx.shutdown/ep EP.REC	CD	1.1E-04	7.2E-01
40	LOOP -emerg.power -rx.shutdown srv.chall/loop.-scram -srv.close -hpci rhr(sdc) rhr(spcool)/rhr(sdc)	CD	4.8E-06	1.0E-01
98	LOOP -emerg.power rx.shutdown	ATWS	2.7E-05	9.0E-01

** non-recovery credit for edited case

SEQUENCE CONDITIONAL PROBABILITIES (SEQUENCE ORDER)

	Sequence	End State	Prob	N Rec**
40	LOOP -emerg.power -rx.shutdown srv.chall/loop.-scram -srv.close -hpci rhr(sdc) rhr(spcool)/rhr(sdc)	CD	4.8E-06	1.0E-01
98	LOOP -emerg.power rx.shutdown	ATWS	2.7E-05	9.0E-01
83	LOOP emerg.power -rx.shutdown/ep EP.REC	CD	1.1E-04	7.2E-01

** non-recovery credit for edited case

SEQUENCE MODEL: c:\asp\1989\bwrcseal.cmp
BRANCH MODEL: c:\asp\1989\pilgrim.sll
PROBABILITY FILE: c:\asp\1989\bwr_csll.pro

No Recovery Limit

BRANCH FREQUENCIES/PROBABILITIES

Branch	System	Non-Recov	Opr Fail

Event Identifier: 293/91-024

trans	5.5E-04	1.0E+00	
LOOP	2.0E-05 > 2.0E-05	4.3E-01 > 9.0E-01	
Branch Model: INITOR			
Initiator Freq:	2.0E-05		
loca	3.3E-06	5.0E-01	
rx.shutdown	3.0E-05	1.0E+00	
rx.shutdown/ep	3.5E-04	1.0E+00	
pcs/trans	1.7E-01	1.0E+00	
srv.chall/trans.-scram	1.0E+00	1.0E+00	
srv.chall/loop.-scram	1.0E+00	1.0E+00	
srv.close	1.3E-02	1.0E+00	
emerg.power	2.9E-03	8.0E-01	
EP.REC	3.1E-02 > 5.5E-02	1.0E+00	
Branch Model: 1.OF.1			
Train 1 Cond Prob:	3.1E-02 > 5.5E-02		
fw/pcs.trans	2.9E-01	3.4E-01	
fw/pcs.loca	4.0E-02	3.4E-01	
hpci	2.9E-02	7.0E-01	
RCIC	6.0E-02 > 1.0E+00	7.0E-01 > 8.0E-02	
Branch Model: 1.OF.1			
Train 1 Cond Prob:	6.0E-02 > Failed		
crd	1.0E-02	1.0E+00	1.0E-02
srv.ads	3.7E-03	7.1E-01	1.0E-02
lpcs	3.0E-03	3.4E-01	
lpci(rhr)/lpcs	1.0E-03	7.1E-01	
rhr(sdc)	2.1E-02	3.4E-01	1.0E-03
rhr(sdc)/-lpci	2.0E-02	3.4E-01	1.0E-03
rhr(sdc) 'lpci	1.0E+00	1.0E+00	1.0E-03
rhr(spcool)/rhr(sdc)	2.0E-03	3.4E-01	
rhr(spcool)/-lpci.rhr(sdc)	2.0E-03	3.4E-01	
rhr(spcool)/lpci.rhr(sdc)	9.3E-02	1.0E+00	
rhrsw	2.0E-02	3.4E-01	2.0E-03

* branch model file
** forced

Minarick
06-01-1992
08:52:49

Event Identifier: 293/91-024

Enclosure 3 to the Minutes of CRGR Meeting No. 256

Proposed Rule for Protection Against Malevolent Use of Vehicles at Nuclear Power Plants

April 11, 1994

TOPIC

P. McKee (NRR) and R. Dube (NRR) presented for CRGR review the proposed final amendments to 10 CFR Part 26 to protect against the vehicle bomb threat. The proposed changes would modify the design basis threat (DBT) for radiological sabotage at operating power reactors to include use of a Design Basis Vehicle (DBV) by adversaries for transporting personnel, hand-carried equipment and a specified amount of high explosives. It would also require power reactor licensees (1) to provide protective measures at their facilities capable of preventing intrusion by the DBV into protected areas, and (2) to demonstrate that those measures will provide substantial protection against the effects of the DBV explosives and prevent radiological sabotage. Licensees could propose alternatives for evaluation by the NRC staff, if it cannot be demonstrated satisfactorily that prevention of intrusion by the DBV will provide the necessary degree of protection against the effects of the DBV explosives. The proposed rule was identified by the sponsoring staff as a safety enhancement backfit.

Copies of briefing slides not categorized as Safeguards Information that were used by the staff to guide the presentations and discussions at this meeting are provided in the Attachment to this Enclosure. (Slides containing Safeguards Information provided to CRGR at the meeting in connection with a briefing on attempted quantification of safeguards-related risk factors, including estimated conditional probability of core damage at one selected site, were not retained in CRGR files and are not available to the public.)

BACKGROUND

The package provided for review by CRGR in this matter was transmitted by memorandum, dated March 29, 1994, F.J. Miraglia to E.L. Jordan; the package contained the following documents:

1. Draft Commission Paper (undated) entitled "Amendments to 10 CFR Part 73 to Protect Against Malevolent Use of Vehicles at Nuclear Power Plants", with attachment:

    a. Enclosure 1 - Proposed Federal Register Notice, including statement of considerations and proposed rule amendments;

    b. Enclosure 2 - Proposed Environmental Assessment for the proposed rulemaking action;

    c. Enclosure 3 - Proposed Public Announcement to accompany publication of the final rule amendments;

d. Enclosure 4 - Proposed Regulatory Analysis (undated) revised to reflect evaluation of public comments;

e. Enclosure 5 - Proposed Notification Letters to Cognizant Congressional Oversight Subcommittee Chairmen;

f. Enclosure 6 - Proposed Regulatory Guide 5.68 (undated), "Protection Against Malevolent Use of Vehicles at Nuclear Power Plants";

g. Enclosure 7 - Technical Report, dated February 1994, NUREG/CR-6190, "Protection Against Malevolent Use of Vehicles at Nuclear Power Plants":

Volume 1 - "Vehicle Barrier System Siting Guidance for Blast Protection";

Volume 11 - "Vehicle Barrier System Selection Guidance".

2. Addendum to the Regulatory Analysis (Item 1.d)

[Site-specific evaluations of selected existing sites. The Addendum is categorized as SAFEGUARDS INFORMATION and was not included in the review package. The document was available to CRGR members upon request during their review and was discussed at the meeting; but it is not retained in CRGR files and is not available to the public.]

3. "Proposed Design Basis Vehicle (DBV) for Inclusion in the Design Basis Threat for Radiological Sabotage"

[This document is categorized as SAFEGUARDS INFORMATION and was not included in the review package. The document was available to CRGR members upon request during their review and was discussed at the meeting; but it is not retained in CRGR files and is not available to the public.]

CONCLUSIONS/RECOMMENDATIONS

On the basis of its review of this item, including the discussions with the staff at this meeting, the Committee recommended in favor of issuing the final rule for implementation, subject to the following minor clarifying modifications (to be coordinated with the CRGR staff:

<u>Draft Commission Paper</u>

1. Page 3, first full paragraph:

Delete the last sentence; and, in the first sentence, change the word "important" to "necessary".

2. Page 3, second full paragraph:

End the last sentence after the words "proposed rulemaking".

Draft Federal Register Notice

3. Page 8, first full paragraph:

In the second sentence, change the words "...cannot be used..." to "...cannot be usefully applied...".

4. Page 23, under "Response" at the bottom of the page:

Add the words "...and plans to continue that approach for timely notification of licensees in the current threat environment".

5. Page 27, under the "Response" to Comment III.B:

It appears that the commenter simply misunderstood the staff's use of the term "adequate protection" vis-a-vis "substantial additional protection" or "substantial improvement in protection of public health and safety". The response should be revised/simplified accordingly.

6. Page 39, under "Finding of No Significant...Impact":

The summary "Finding..." in this section of the draft FRN, and the Environmental Assessment itself (i.e., Enclosure 2 to the draft Commission Paper), should address non-radiological as well as radiological impacts.

Draft Regulatory Guide 5.68

7. Page 2, third paragraph under "DISCUSSION":

Delete the third sentence of the paragraph entirely.

8. Page 10, subitem (4):

Revise the last sentence to read as follows:

> "The assessment should describe the extent that alternative measures provide equivalent protection against a vehicle bomb considering unique plant characteristics."

BACKFIT AND SAFETY GOAL CONSIDERATIONS

The proposed action is considered a safety enhancement backfit that is justified on the basis of the qualitative considerations cited and the cost estimates provided in the staff's analysis of this issue. The safeguards

issues involved do not lend themselves readily to quantification; therefore, no quantitative estimates were made of projected risk or (core melt frequency) improvement from this action for comparison with the NRC safety goals.

File Copy
Mtg 256
4/1/94

CRGR PRESENTATION
(FINAL RULE FOR PROTECTION OF NPPs AGAINST MALEVOLENT USE OF VEHICLES)

BACKGROUND

- o Proposed Rule

  JUN 93 - SRM directed expedited rulemaking

  AUG 93 - Met with CRGR on proposed rule

  SEP 93 - Proposed rule sent to Commission (SECY-93-270)

  NOV 93 - Met with ACRS

  NOV 93 - Proposed rule published

  JAN 94 - Comments on proposed rule due

- o Final Rule

  FEB, APR 94 - Met with ACRS

Attachment to
Enclosure 3

FINAL RULE PACKAGE

- Federal Register Notice

  Comment Resolution

  Final Rule

- Regulatory Guide 5.68

- NUREG/CR-6190

COMMENTS/COMMENT RESOLUTION

- o 35 Comment Letters Received
- o Comment Areas
  - * Quantification of the threat
  - * Threat Considerations
    - (1) Coupling vehicle intrusion and vehicle bomb threat
    - (2) Characteristics of design basis vehicle/explosive
    - (3) Applicability of 10 CFR 50.13
  - * Rule Implementation
    - (1) Schedule
    - (2) NRC review and approval of submittals
    - (3) Barrier (Active and Passive) guidance
    - (4) Alternative measures to protect against explosives
  - * Applicability to Spent Fuel Storage Installations

- Changes to proposed rule
  - Clarification that vehicle intrusion and vehicle bomb are separate threats
  - Specific exemption of ISFSI's
  - Clarification of meaning of design goals
  - Extension to implementation schedules
- Update of regulatory analysis
- Changes to draft Regulatory Guide
- Development of NUREG/CR-6190, Protection Against Malevolent Use of Vehicles at Nuclear Power Plants
  - Volume I, Vehicle Barrier System Siting Guidance for Blast Protection
  - Volume II, Vehicle Barrier System Selection Guidance

Enclosure 4 to the Minutes of CRGR Meeting No. 256

Proposed Urgent Bulletin on Potential Fuel Pool Draindown Caused by Inadequate Maintenance Practices at Dresden Unit 1

April 11, 1994

TOPIC

B. Grimes (NRR) presented for CRGR review the proposed urgent NRC Bulletin, "Potential Fuel Pool Draindown Caused by Inadequate Maintenance Practices at Dresden Unit 1". The purpose of the bulletin was to (1) inform power reactor, fuel cycle and materials licensees of the results of a special NRC inspection at Dresden Unit 1, and (2) to request certain actions from licensees of power reactors that are permanently shutdown with spent fuel in the spent fuel pool to take certain actions to ensure that the quality of the spent fuel pool coolant, and the cooling and shielding for fuel or equipment stored in the spent fuel pool, is not compromised and that all necessary structures and support systems are maintained and are not degraded. The proposed action was identified by the sponsoring staff as a compliance backfit.

BACKGROUND

The package provided for review by CRGR in this matter was transmitted by memorandum, dated April 11, 1994, F.M. Miraglia, Jr. to E.L. Jordan; the package contained the following documents:

1. Draft NRC Bulletin (undated), "Potential Fuel Pool Draindown Caused by Inadequate Maintenance Practices at Dresden Unit 1";

2. Enclosure entitled "CRGR Review Package" containing information specified in Section IV.B. of the CRGR Charter.

Copies of the above documents are enclosed (Attachment to Enclosure 4).

CONCLUSIONS/RECOMMENDATIONS

On the basis of its discussions with the staff at this meeting, the Committee recommended in favor of issuing the proposed bulletin expeditiously for implementation, subject to the following modifications discussed at the meeting (to be coordinated with the CRGR staff):

1. There is some ambiguity in the package regarding whether the requested actions are intended only as 50.54(f) information requests or are also intended to specify backfitting (if noncompliance is discovered). For example, item (ix) in Enclosure 2 states that the "..bulletin contains no requests for licensees to implement any modifications"; but the "Backfit Discussion" in the bulletin indicates that "the actions requested by this bulletin will ensure...compliance.. with existing rules and regulations". Also, item (ii) of Enclosure 2 indicates that the proposed actions are necessary to ensure compliance with existing

requirements, but does not address the question of whether the proposed action increases or only implements existing staff positions.

The discussions at the meeting indicated clearly that the staff intends that licensees should take actions (including needed modifications) to ensure compliance, if compliance cannot be readily verified; and the Committee agrees that is appropriate. The staff should clarify this aspect of the proposed bulletin to remove any ambiguity on this important point.

2. The following additional specific changes to the draft bulletin were discussed and agreed to by the staff at the meeting:

   a. Revise "Requested Action 1." as follows:

      Insert the phrase "..consistent with the licensing basis.." following the word "are operable and adequate.."

   b. Revise the first sentence under "Requested Action 4." to read as follows:

      "Ensure that operating procedures address conditions and observations that could indicate changes in SFP level and address appropriate maintenance, calibration and surveillance of available monitoring equipment."

BACKFIT AND SAFETY GOAL CONSIDERATIONS

The proposed action was evaluated and justified as a compliance backfit; as such, no comparison with the Commission's safety goals is required in accordance with NRC procedures.

UNITED STATES
NUCLEAR REGULATORY COMMISSION
WASHINGTON, D.C. 20555

April 11, 1994

MEMORANDUM FOR: Edward L. Jordan, Chairman
Committee to Review Generic Requirements

FROM: Frank J. Miraglia, Deputy Director
Office of Nuclear Reactor Regulation

SUBJECT: REQUEST FOR REVIEW AND ENDORSEMENT OF A PROPOSED NRC BULLETIN, "POTENTIAL FUEL POOL DRAINDOWN CAUSED BY INADEQUATE MAINTENANCE PRACTICES AT DRESDEN UNIT 1"

The Office of Nuclear Reactor Regulation (NRR) requests that the Committee to Review Generic Requirements (CRGR) review and endorse the subject proposed bulletin.

Enclosure 1 is the bulletin as proposed by the staff. The purpose of this bulletin is to (1) inform addressees of the results of a special NRC inspection at Dresden Nuclear Power Station Unit 1 (Dresden 1), (2) to request that action addressees implement certain actions as described in the bulletin, and (3) to require that action addressees provide NRC written response relating to the implementation of the requested actions. During a special NRC inspection at Dresden 1, the staff learned that a potential existed for the spent fuel pool (SFP) water inventory to drain sufficient to reduce shielding of the stored spent fuel creating radiation hazards for plant personnel and allowing the potential for radionuclides to spread from the SFP to other areas of the plant. Further, the staff learned that maintenance of the SFP water inventory was not in accordance with the licensing basis for Dresden 1 in that the conductivity of the SFP water exceeded the technical specification limit and that high concentrations of cesium-137 existed. The staff believes it is necessary to request certain licensees, whose plant status is similar to that at Dresden 1, to take actions to verify the integrity of the spent fuel pool (SFP) and that all necessary support systems for maintenance of the inventory and quality of the SFP water are operable. There are two required responses. The first response is required within 30 days of the date of the bulletin and requests that action addressees provide the details of their planned actions in response to the bulletin. The second response, to be submitted 30 days after completion of the requested actions, requests that action addressees notify the NRC that actions in response to the bulletin have been completed. The staff considers this bulletin to be Category (1).

Enclosure 2 is the response to the questions contained in Section IV.B of the CRGR Charter. The responses to these questions document the justification to issue this bulletin as a compliance backfit under the terms of 10 CFR 50.109(a)(4).

A notice of opportunity for public comment on the proposed bulletin will not be published in the Federal Register because the staff considers the need for licensees to implement the requested actions quickly to outweigh the

Attachment to
Enclosure 4

need to provide the public the opportunity for comment. The proposed bulletin will be published in the Federal Register when it is issued.

The Office of the General Counsel has received this bulletin for review.

This bulletin is sponsored by Brian K. Grimes, Director, Division of Reactor Support.

W. Russell for

Frank J. Miraglia, Deputy Director
Office of Nuclear Reactor Regulation

Enclosures:
1. Proposed Bulletin
2. Response to CRGR Charter Questions

Enclosure 1

UNITED STATES
NUCLEAR REGULATORY COMMISSION
OFFICE OF NUCLEAR REACTOR REGULATION AND
OFFICE OF NUCLEAR MATERIALS SAFETY AND SAFEGUARDS
WASHINGTON, D.C. 20555

April xx, 1994

NRC BULLETIN 94-XX: POTENTIAL FUEL POOL DRAINDOWN CAUSED BY INADEQUATE MAINTENANCE PRACTICES AT DRESDEN UNIT 1

Addressees

For Action:

All holders of licenses for nuclear power reactors that are permanently shut down with spent fuel in the spent fuel pool (except Shoreham). [Humboldt Bay, Indian Point 1, La Crosse, Rancho Seco, San Onofre 1, Trojan, Yankee Rowe, and Dresden 1]

For Information:

All holders of operating licenses or construction permits for nuclear power reactors and all fuel cycle and materials licensees authorized to possess spent fuel.

Purpose

The U.S. Nuclear Regulatory Commission (NRC) is issuing this bulletin: (1) to inform addressees of the results of a special NRC inspection at Dresden Nuclear Power Station Unit 1 (Dresden 1), (2) to request that all action addressees implement the actions described herein, and (3) to request that all action addressees provide to NRC written response to this bulletin relating to implementation of the requested actions.

Description of Circumstances

Dresden 1, one of three boiling water reactors at the Dresden site near Morris, Illinois, was licensed for operation on September 28, 1959, and was permanently shut down on October 31, 1978. On January 25, 1994, the licensee for Dresden 1 discovered approximately 200 m^3 [55,000 gallons] of water in the basement of the unheated Unit 1 containment. The water originated from a rupture of the service water system piping inside the containment that had been caused by freeze damage to the system. The licensee investigated further and found that, although the fuel transfer system was not damaged, there was a potential for a portion of the system inside the containment to fail and result in a partial draindown of the spent fuel pool (SFP) that contained 660 spent fuel assemblies. The licensee implemented several specific actions to guard against further damage from freezing and appointed a team to investigate the status of Dresden 1.

The NRC dispatched a team of inspectors from the Offices of Nuclear Reactor Regulation (NRR), Nuclear Material Safety and Safeguards, and Region III to

conduct a special inspection of the circumstances surrounding the event. The details of that inspection will be in an NRC inspection report to be issued shortly. Based on these reviews the following conditions existed:

- Heating had not been provided to the Dresden 1 containment for the 1989/1990 and subsequent heating seasons. The lack of heating inside the containment could have resulted in the freezing and rupture of the fuel transfer tube. Failure of the fuel transfer tube could have rapidly drained the SFP to several feet below the top of the stored fuel assemblies. This would have resulted in dose rates at the edge of the pool of about 8 Sievert [800 rem] per hour and significant scatter radiation fields inside the site boundary, creating personnel hazards from the high radiation fields. Exposure of the fuel may also have allowed contamination to spread to other areas.

- The water quality in the SFP was poor. The original cleanup and cooling system was shut down in 1983; by 1987 the water quality had degraded to the point that an influx of microorganisms had developed. Concerned that the microorganisms might cause microbiologically induced corrosion, the licensee installed a temporary system to cleanup the pool. The temporary system proved to be incapable of restoring the water quality to an acceptable level. Licensee records show that the conductivity in the pool exceeded the technical specification limit of 10 μmho per centimeter by about a factor of two. Also, the licensee estimated that approximately 90 stored fuel bundles had leaking fuel pins resulting in elevated concentrations of cesium-137 of about 370 Becquerels/ml [1×10^{-2} μCi/ml].

- A number of obsolete piping lines from the original pool cleanup and cooling system remained in the SFP and were potential siphon paths that could drain the pool.

- Because the SFP gate was not installed it could not have prevented a draindown of the pool if the fuel transfer pool or tunnel had emptied. The NRC inspectors noted that the gaskets and steel mating surfaces for the spent fuel gate had been exposed to adverse biological, chemical, and radiological conditions that may have affected their ability to seal had the gate been installed.

- The licensee had no SFP leak detection or water inventory program. The observed cracks in the unlined concrete pool indicated a significant potential for pool leakage.

Site personnel had for some time focused their attention on the operating units and assumed that no significant problems would occur at Dresden 1. Interviews with personnel at the Dresden site (which includes two operating units in addition to Dresden 1) showed that, in part, the weaknesses identified above were based on an incorrect belief that Dresden 1 could not cause a serious safety problem because it was permanently shut down. This belief resulted in audits and safety evaluations that were not rigorously implemented or that did not include the Dresden 1 systems and programs. However, as noted above, significant safety considerations did exist.

Discussion

It is necessary to maintain an adequate inventory of water in the spent fuel pool to safely store spent fuel. A proper depth of SFP water provides protection for plant personnel from excessive exposure to radiation from spent fuel and other materials stored in the spent fuel pool. Control of the exposure of plant personnel is required by Part 20 of Title 10 of the Code of Federal Regulations (10 CFR Part 20). Rapid loss of SFP water inventory may result from a failure of piping connected to the SFP or from a siphoning action of piping as a result of an improper valve alignment. A loss of SFP water inventory may also result from a failure of seals or gaskets used as part of the SFP boundary. If seals and gaskets are allowed to become degraded, a leak may increase rapidly once it initiates. Failure to have a leak detection system or a water inventory program may allow leakage of SFP water to go undetected.

Proper maintenance and operation of SFP systems is necessary to maintain water quality and radionuclides at acceptable levels. Maintenance of water quality is necessary to prevent degradation of the spent fuel and other stored materials stored in the SFP (i.e., control rod blades or incore instrument strings). Proper SFP water treatment programs prevent the buildup of excessive concentrations of radionuclides. Proper maintenance of the SFP and the support systems would also mitigate the consequences of any potential release from the SFP.

Requested Actions

Immediately upon receipt of this bulletin, all action addressees are requested to take the following actions to ensure that the quality of the SFP coolant, and the cooling and shielding for fuel or equipment stored in the SFP is not compromised and that all necessary structures and support systems are maintained and are not degraded.

1. Verify that the structures and systems required for containing, cooling, cleaning, level monitoring and makeup of water in the SFP are operable and adequate to preclude high levels of radionuclides in the pool water and adverse effects on stored fuel, the SFP, fuel transfer components, and related equipment.

2. Verify that systems for essential area heating and ventilation are adequate and appropriately maintained so that potential freezing failures that could cause loss of SFP water inventory are precluded.

3. Verify that piping or hoses in or attached to the SFP cannot serve as siphon or drainage paths in the event of piping or hose degradation or failure or the mispositioning of system valves.

4. Assure that operating personnel are alert to changes in SFP level and that appropriate maintenance, calibration and surveillance of any relevant components or monitoring equipment are periodically performed. This should include any leak detection systems.

Required Response

All action addressees are required to submit the following written response to this bulletin:

1. Within 30 days of the date of this bulletin, a written response indicating whether or not the addressee will implement the actions requested above. If the addressee intends to implement the requested actions, provide a schedule for completing implementation. If an addressee chooses not to take the requested actions, provide a description of any proposed alternative course of action, the schedule for completing the alternative course of action (if applicable), and the safety basis for determining the acceptability of the planned alternative course of action.

2. Within 30 days of completion of the requested actions, a report confirming completion.

Address the required written reports to the U.S. Nuclear Regulatory Commission, ATTN: Document Control Desk, Washington, D.C. 20555, under oath or affirmation under the provisions of Section 182a, Atomic Energy Act of 1954, as amended, and 10 CFR 50.54(f). In addition, submit a copy to the appropriate regional administrator.

Backfit Discussion

Containing, cooling, and shielding of spent fuel and other radioactive sources stored in the spent fuel pool is required to meet plant licensing bases and, as applicable, Section VI, "Fuel and Radioactivity Control," of Appendix A to 10 CFR Part 50 and to ensure that exposure limits to the public and plant personnel do not exceed the limits in 10 CFR Part 20. Therefore, this bulletin is being issued as a compliance backfit under the terms of 10 CFR 50.109(a)(4). The actions requested by this bulletin will ensure that the action addressees are in compliance with existing NRC rules and regulations.

A notice of opportunity for public comment was not published in the Federal Register because of the urgent nature of the actions requested by the bulletin.

Paperwork Reduction Act Statement

The information collections contained in this request are covered by the Office of Management and Budget clearance number 3150-0011, which expires June 30, 1994. The public reporting burden for this collection of information is estimated to average 300 hours per response, including the time for reviewing instructions, searching existing data sources, gathering and maintaining the data needed, and completing and reviewing the collection of information. Send comments regarding this burden estimate or any other aspect of this collection of information, including suggestions for reducing this burden, to the Information and Records Management Branch (MNBB-7714), U.S. Nuclear Regulatory Commission,

Washington, D.C. 20555, and to the Desk Officer, Office of Information and Regulatory Affairs, NEOB-3019, (3150-0011), Office of Management and Budget, Washington, D.C. 20503.

Compliance with the following request for information is purely voluntary. The information would assist NRC in evaluating the cost of complying with this bulletin:

(1) the licensee staff time and costs to perform requested inspections, corrective actions, and associated testing;

(2) the licensee staff time and costs to prepare the requested reports and documentation;

(3) the additional short-term costs incurred as a result of the inspection findings such as the costs of the corrective actions or the costs of down time;

(4) an estimate of the additional long-term costs which will be incurred in the future as a result of implementing commitments such as the estimated costs of conducting future inspections or increased maintenance.

NRC is issuing this bulletin to the information addressees to alert them to the potential for spent fuel pool draindown under the described conditions. It is expected that recipients will review the information for applicability to their facilities and consider actions, as appropriate, to avoid similar problems. However, the requested actions and required responses applicable to the action addressees are not applicable to the information addressees; therefore, no specific action or written response is required from them. The NRC staff is reviewing the need to request actions related to siphon or drainage paths at older operating power plants and certain fuel cycle facilities.

If you have any questions about this matter, please contact one of the persons listed below or the appropriate NRC project manager.

Malcolm R. Knapp, Director
Division of Waste Management
Office of Nuclear Material Safety and Safeguards

Luis A. Reyes
Acting Associate Director for Projects
Office of Nuclear Reactor Regulation

Technical contacts: Steve Jones, NRR
(301) 504-1116

Lee Thonus, NRR
(717) 948-1161

Larry Bell, NMSS
(301) 504-2171

Attachments:
1. List of Recently Issued NRC Bulletins
2. List of Recently Issued NMSS Bulletins

Enclosure 2

CRGR REVIEW PACKAGE

PROPOSED ACTION: Issue the proposed bulletin to request action addressees to take actions to verify the integrity of the spent fuel pool and the operability of all necessary support systems.

CATEGORY: 1

RESPONSE TO REQUIREMENTS FOR CONTENT OF PACKAGE SUBMITTED FOR CRGR REVIEW

(i) The proposed generic requirement or staff position as it is proposed to be sent out to licensees.

The proposed bulletin requests action addressees to take the following actions:

1. Verify that the structures and systems required for containing, cooling, cleaning, level monitoring and makeup of water in the SFP are operable and adequate to preclude high levels of radionuclides in the pool water and adverse effects on stored fuel, the SFP, fuel transfer components, and related equipment.

2. Verify that systems for essential area heating and ventilation are adequate and appropriately maintained so that potential freezing failures that could cause loss of SFP water inventory are precluded.

3. Verify that piping or hoses in or attached to the SFP cannot serve as siphon or drainage paths in the event of piping or hose degradation or failure or the mispositioning of system valves.

4. Assure that operating personnel are alert to changes in SFP level and that appropriate maintenance, calibration and surveillance of any relevant components or monitoring equipment are periodically performed. This should include any leak detection systems.

All action addressees are required to submit the following written response to this bulletin:

1. Within 30 days of the date of this bulletin, a written response indicating whether or not the addressee will implement the actions requested above. If the addressee intends to implement the requested actions, provide a schedule for completing implementation. If an addressee chooses not to take the requested actions, provide a description of any proposed alternative course of action, the schedule for completing the alternative course of action (if applicable), and the safety basis for determining the acceptability of the planned alternative course of action.

2. Within 30 days of completion of the requested actions, a report confirming completion.

This bulletin is being issued as a compliance backfit under the terms of 10 CFR 50.109(a)(4). The actions requested by this bulletin will ensure that the action addressees are in compliance with existing NRC rules and regulations.

A notice of opportunity for public comment was not published in the Federal Register because of the urgent nature of the actions requested by the bulletin.

(ii) Draft staff papers or other underlying staff documents supporting the requirements or staff positions. (A copy of all materials referenced in the document shall be made available upon request to the CRGR staff. Any Committee member may request CRGR staff to obtain a copy of any reference material for his or her use.)

The staff position is supported by existing requirements in individual plant licensing documents and by the requirements found in Part 20 of Title 10 of the Code of Federal Regulations (10 CFR 20) and, as applicable, Section VI, "Fuel and Radioactivity Control," of Appendix A to Part 50 of Title 10 of the Code of Federal Regulations (10 CFR 50). These sections of the Code contain requirements for licensees to ensure that exposure limits to plant personnel or to the public do not exceed the limits in 10 CFR 20.

(iii) Each proposed requirement or staff position shall contain the sponsoring office's position as to whether the proposal would increase requirements or staff positions, implement existing requirements or staff positions, or would relax or reduce existing requirements or staff positions.

The proposed requested actions are necessary to ensure that licensees are in compliance with existing requirements.

(iv) The proposed method of implementation with the concurrence (and any comments) of OGC on the method proposed. The concurrence of affected program offices or an explanation of any nonconcurrences.

The proposed method of implementation is to request action licensees to verify the status of their spent fuel pools and the necessary support systems and to report to the NRC the status of those items. Further, the proposed bulletin will request that action licensees take compensatory action for those aspects that are found not to be in compliance with the licensing basis and report to the NRC any proposed corrective actions to restore the equipment or systems to within the licensing basis.

(v) Regulatory analyses conforming to the directives and guidance of NUREG/BR-0058 and NUREG/CR-3568. (This does not apply for backfits that ensure compliance or ensure, define, or redefine adequate protection. In these cases a documented evaluation is required as discussed in IV.B.(ix).)

This is a compliance issue; therefore no value/impact analysis was made.

(vi) Identification of the category of reactor plants to which the generic requirement or staff position is to apply.

The proposed bulletin would apply to all permanently shut down reactors with spent fuel in the spent fuel pool. The proposed bulletin would be provided to all additional holders of operating licenses or construction permits for information purposes.

(vii) For backfits other than compliance or adequate protection backfits, a backfit analysis as defined in 10 CFR 50.109. The backfit analysis shall include, for each category of reactor plants, an evaluation which demonstrates how the action should be prioritized and scheduled in light of other ongoing regulatory activities. The backfit analysis shall document for consideration information available concerning any of the following factors as may be appropriate and any other information relevant and material to the proposed action:

(a) Statement of the specific objectives that the proposed action is designed to achieve;

(b) General description of the activity that would be required by the licensee or applicant in order to complete the action;

(c) Potential change in the risk to the public from the accidental release of radioactive material;

(d) Potential impact on radiological exposure of facility employees and other onsite workers;

(e) Installation and continuing costs associated with the action, including the cost of facility downtime or the cost of construction delay;

(f) The potential safety impact of changes in plant or operational complexity, including the relationship of proposed and existing regulatory requirements and staff positions;

(g) The estimated resource burden on the NRC associated with the proposed action and the availability of resources;

(h) The potential impact of differences in facility type, design, or age on the relevancy and practicality of the proposed action;

(i) Whether the proposed action is interim or final, and if interim, the justification for imposing the proposed action on an interim basis;

(j) How the action should be prioritized and scheduled in light of other ongoing regulatory activities. The following information may be appropriate in this regard:

1. The proposed priority or schedule,
2. A summary of the current backlog of existing requirements awaiting implementation,
3. An assessment of whether implementation of existing requirements should be deferred as a result, and
4. Any other information that may be considered appropriate with regard to priority, schedule, or cumulative impact. For example, could implementation be delayed pending public comment?

This is a compliance issue only. The bulletin seeks to ensure that licensees are in compliance with existing requirements.

(viii) For each backfit analyzed pursuant to 10 CFR 50.109(a)(2) (i.e., not adequate protection backfits and not compliance backfits), the proposing Office Director's determination, together with the rational

for the determination based on the consideration of paragraph (i) and (vii) above, that:

(a) There is a substantial increase in the overall protection of public health and safety or the common defense and security to be derived from the proposal; and

(b) The direct and indirect costs of implementation, for the facilities affected, are justified in view of this increased protection.

This is a compliance issue only. The bulletin seeks to ensure that licensees are in compliance with existing requirements.

(ix) For adequate protection or compliance backfits evaluated pursuant to 10 CFR 50.109(a)(4)

(a) a documented evaluation consisting of:
(1) the objectives of the modification
(2) the reasons for the modification
(3) the basis for invoking the compliance or adequate protection exemption.

(b) in addition, for actions that were immediately effective (and therefore issued without prior CRGR review as discussed in III.C) the evaluation shall document the safety significance and appropriateness of the action taken and (if applicable) consideration of how costs contributed to selecting the solution among various acceptable alternatives.

The proposed bulletin contains no requests for licensees to implement any modifications. The actions requested by this proposed bulletin are considered necessary to ensure that licensees are in compliance with existing NRC rules and regulations where these rules are applicable. Therefore, this bulletin is to be issued as a compliance backfit under the terms of 10 CFR 50.109(a)(4).

(x) For each evaluation conducted for proposed relaxations or decreases in current requirements or staff positions, the proposing Office Director's determination, together with the rationale for the determination based on the considerations or paragraphs (i) through (vii) above, that:

(a) The public health and safety and the common defense and security would be adequately protected if the proposed reduction in requirements or positions were implemented, and

(b) The cost savings attributed to the action would be substantial enough to justify taking the action.

This item is not applicable to the proposed bulletin because no relaxation or decrease in current requirements is being proposed.

(xi) For each request for information under 10 CFR 50.54(f) (which is not subject to exception as discussed in III.A) an evaluation that includes at least the following elements:

(a) A problem statement that describes the need for the information in terms of potential safety benefit.

(b) **The licensee actions required and the cost to develop a response to the information request.**

(c) **An anticipated schedule for NRC use of the information.**

(d) **A statement affirming that the request does not impose new requirements on the licensee, other than for the requested information.**

This item is not applicable to requests for information under 10 CFR 50.54(f) that are contained in the proposed bulletin because the information is requested to verify compliance with existing requirements.

(xii) An assessment of how the proposed action relates to the Commission's Safety Goal Policy Statement.

Because this is a compliance backfit, there is no impact on the Commission's Safety Goal Policy Statement.

cc: Commission (2)
SECY
J. Lieberman, OE
P. Norry, ADM
L. Norton, OIG
K. Cyr, OGC
J. Larkins, ACRS
Office Directors
Regional Administrators, RI/RII/RIII/RIV
CRGR Members
E. W. Brach
G. Holahan

Distribution of CRGR Minutes 278
Central File w/att.
PDR (NRC/CRGR) w/o att.
CRGR SF
CRGR CF
S. Treby
J. Milhoan
A. Thadani
J. Conran
R. Tripathi
C. Berlinger
R. Elliott
E. Serkiz
M. Marshall
J. Rosenthal
T. J. Carter

S:\CRGR\FMINUTES.278 *Previously Concurred

CRGR:AEOD *	DD:AEOD *	D:AEOD
RTripathi	DFRoss	ELJordan
11/13/95	11/14/95	11/15/95

cc: Commission (4)
SECY
J. Lieberman, OE
P. Norry, ADM
~~D. Williams~~, OIG
K. Cyr, OGC
J. Larkins, ACRS
Office Directors
Regional Administrators, RI/RII/RIII/RIV
CRGR Members
E. W. Brach
G. Holahan

Distribution of CRGR Minutes 278
Central File w/att.
PDR (NRC/CRGR) w/o att.
CRGR SF
CRGR CF
S. Treby
J. Milhoan
A. Thadani
J. Conran
R. Tripathi
C. Berlinger
R. Elliott
E. Serkiz
M. Marshall
J. Rosenthal
T. J. Carter

S:\CRGR\MINUTES.278

CRGR:AEOD	DD:AEOD	D:AEOD
RTripathi	DFRoss	ELJordan
11/13/95:	11/ /95	11/ /95