GPU NUCLEAR

GPU Nuclear, Inc.
Route 441 South
Post Office Box 480
Middletown, PA 17057-0480
Tel 717-944-7621

U. S. Nuclear Regulatory Commission
Attention: Document Control Desk
Washington, DC 20555

1920-99-20527
October 29, 1999

Dear Sir:

Subject: Three Mile Island Nuclear Station, Unit 1, (TMI-1)
Operating License No. DPR-50
Docket No. 50-289
License Change Application (LCA) No. 287

In accordance with 10 CFR 50.4(b)(1), enclosed is TMI-1 LCA No. 287. The purpose of this LCA is to request approval of changes associated with operation with the Makeup and Purification System (MU)/High Pressure Injection (HPI) as requested by the NRC in a letter dated March 26, 1999. Technical Specification changes include 1) the addition of operating limits for MUT level and pressure 2) the addition of surveillance requirements for the Makeup Tank (MUT) pressure instrument channel and 3) revision of the calibration frequency for the MUT level instrument channel from every 24 months to the refueling interval frequency. Additionally, this LCA revises the calibration frequency for HPI flow and Low Pressure Injection (LPI) flow instrument channels to the refueling frequency. The guidance contained in NRC Generic Letter (GL) 91-04, dated April 2, 1991 has been addressed where applicable.

Using the standards in 10CFR50.92, GPU Nuclear has concluded that these proposed changes do not constitute a significant hazards consideration, as described in the enclosed analysis performed in accordance with 10CFR50.91(a)(1). Also enclosed is the Certificate of Service for this request certifying service to the chief executives of the township and county in which the facility is located, as well as the designated official of the Commonwealth of Pennsylvania, Bureau of Radiation Protection.

If you have any questions regarding this information, please contact Mr. Bob Knight at (717) 948-8554.

Sincerely,

James W. Langenbach
Vice President and Director, TMI

Enclosures:
1) TMI-1 LCA No. 287 Safety Evaluation and No Significant Hazards Consideration Analysis
2) TMI-1 Technical Specification Revised Pages for LCA No. 287
3) Certificate of Service for TMI-1 LCA No. 287

/MRK

cc: Administrator NRC Region I
TMI Senior NRC Resident Inspector
TMI-1 Senior NRC Project Manager
File No. 97062

METROPOLITAN EDISON COMPANY
JERSEY CENTRAL POWER & LIGHT COMPANY
AND
PENNSYLVANIA ELECTRIC COMPANY
THREE MILE ISLAND NUCLEAR STATION, UNIT 1

Operating License No. DPR-50
Docket No. 50-289
License Change Application (LCA) No. 287

COMMONWEALTH OF PENNSYLVANIA)
) SS:
COUNTY OF DAUPHIN)

This LCA is submitted in support of Licensee's request to change Appendix A to Operating License No. DPR-50 for Three Mile Island Nuclear Station, Unit 1. As a part of this request, proposed replacement pages for the Appendix A Technical Specifications are also included. All statements contained in this submittal have been reviewed, and all such statements made and matters set forth therein are true and correct to the best of my knowledge.

GPU NUCLEAR INC.

BY: James W Langenbach
Vice President and Director, TMI

Sworn and subscribed to before me
this 27th day of October, 1999.

Suzanne C. Miklosik
Notary Public

Notarial Seal
Suzanne C. Miklosik, Notary Public
Londonderry Twp., Dauphin County
My Commission Expires Nov. 22, 1999
Member, Pennsylvania Association of Notaries

Enclosure 1

TMI-1 License Change Application No. 287
Safety Evaluation and No Significant Hazards Consideration Analysis

I. License Change Application (LCA) No. 287

GPU Nuclear requests that the following changed replacement pages be inserted into the existing TMI-1 Technical Specifications (T.S.):

Pages 3-21 through 3-24, and 4-5a are being revised, and page 3-24a is a new page added to the TS.

Revised pages (showing the changes in bold) along with a markup of the current T.S. pages are provided in Enclosure 2.

II. Reason For Change

The purpose of this LCA is to request approval of changes associated with operation with Makeup and Purification (MU)/High Pressure Injection (HPI) system as requested by the NRC in reference 5. The T.S. changes include:

1) Addition of operating limits for MUT level and pressure in a new Figure 3.3.1,
2) An additional surveillance requirement for the MUT pressure instrument channel,
3) A change to the frequency of calibration for the level instrument from F (every 24 months) to R (refueling interval),
4) A change to the frequency of calibration for the HPI and Low Pressure Injection (LPI) flow instruments, and
5) Minor editorial changes.

Recent industry events, including TMI-1 Licensee Event Report (LER) 98-09 (Reference 1) have highlighted the importance for Makeup Tank (MUT) level and pressure control to maintain the reliability of the High Pressure Injection (HPI) pumps. Consistent with the intent of Technical Specifications (T.S.) and NRC Administrative Letter (AL) 98-10, "Dispositioning of Technical Specifications That Are Insufficient To Assure Plant Safety," GPU Nuclear is proposing new limits be adopted in the TMI-1 T.S. for MUT level and pressure.

The following lists the changes proposed for each of the pages affected by LCA No. 287 (referring to the existing T.S. page numbers):

Page 3-21

A new section (3.3.1.1.g) is being added to the Limiting Condition for Operation for the Injection Systems of Emergency Core Cooling placing restrictions on operation to assure that MUT level and pressure parameters are maintained within limits. The new section reads as follows: "MU Tank (MUT) pressure and level shall be maintained within the Unrestricted Operating Region of Figure 3.3.1. With MUT conditions in the Restricted Region of Figure 3.3.1, restore MUT pressure and level to within the Unrestricted Operating Region within 4 hrs. Specification 3.0.1 applies."

Editorial changes on this page include:

1) Consistent use of the acronyms: "BWST" for the Borated Water Storage Tank, a proper definition of the makeup pumps as the "Makeup and Purification (MU)/High Pressure Injection (HPI)" pumps, and "CFT" for the Core Flooding Tanks,

2) An additional dash, "-," is added to the valve nomenclature for the reactor building sump isolation valves "DH-V-6A/B" to be consistent with labeling of plant components, and
3) The term "operable" is shown in capital letters consistent with TMI-1 T.S. convention for those terms defined in Chapter 1 of the Technical Specifications.

Page 3-22

Editorial changes on this page include:
1) The T.S. section heading is added for clarity to show that this page is a continuation of the Limiting Conditions for Operation for the Emergency Core Cooling, Reactor Building Emergency Cooling and Reactor Building Spray Systems,
2) Consistent use of the acronyms: "CFT" for Core Flood Tank and "NaOH" for sodium hydroxide,
3) An additional dash, "-," is added to the valve nomenclature for the CFT vent valves "CF-V-3A," and "CF-V-3B" to be consistent with labeling of plant components.

Page 3-23

A new paragraph is being added to the Bases pertaining to the MUT pressure and level limits. The new paragraph reads as follows: "Maintaining MUT pressure and level within the limits of Fig 3.3.1 ensures that MUT gas will not be drawn into the pumps and the pumps will have adequate net positive suction head (NPSH) for any design basis accident. Preventing gas entrainment of the pumps is not dependent upon operator actions after the event occurs. The NPSH limit is necessary only to preclude damage to an HPI pump if it is started prior to an ES Actuation. The plant operating limits (alarms and procedures) will include margins to account for instrument error."

Editorial changes on this page include:
1) The T.S. section heading is added for clarity to show that this page is a continuation of the Limiting Conditions for Operation for the Emergency Core Cooling, Reactor Building Emergency Cooling and Reactor Building Spray Systems,
2) Consistent use of the acronyms "CFT" for Core Flood Tank, and
3) The term "operable" is shown in capital letters consistent with TMI-1 T.S. convention for those terms defined in Chapter 1 of the Technical Specifications.

Page 3-24

The only change on this page is the addition of a heading for clarity to show that this page is a continuation of the Bases for T.S. 3.3.

Page 3-24a

This new page includes the new Figure 3.3.1 for "Makeup Tank Pressure vs Level Limits."

Page 4-5a

Item No. 27 in Table 4.1-1 is revised to identify two MUT instruments, the level channel and the pressure channel. The level channel calibration frequency is changed from F, (every 24 months) to R, (refueling interval). The same surveillance requirements are added for the pressure instrument channel as for the level instrument with a refueling interval calibration requirement.

Item No. 29, High and Low Pressure Injection Systems, Flow Channels: The channel calibration frequency is changed from F, (every 24 months) to R, (refueling interval).

III. Safety Evaluation Justifying the Change

A. Background

In LER 98-09 (Reference 1) GPU Nuclear reported that the analysis for operation with MU/HPI pump suctions cross-connected had been found to be non-conservative in that the analysis had not considered the most limiting single failure resulting in operation outside MUT pressure and level limits approximately 3% of the time since the procedure changes were implemented for Cycle 12 Operation. Subsequently, the NRC issued a Level IV Notice of Violation (Reference 2) of 10 CFR 50.50 for failure to identify an unreviewed safety question. The NOV stated that the change created the possibility for a malfunction of a different type than any previously evaluated in the UFSAR in that a new potential for failure of the "C" MU/HPI pump due to gas entrainment from the MUT was created. GPU Nuclear agreed to the violation and responded in references 3 and 4 that the violation was resolved after the MUT pressure and level limits were revised to correct the error. In a letter dated March 26, 1999 (Reference 5) the NRC concluded that GPU Nuclear had provided adequate justification for continued operation (References 3 and 4) and although there was no immediate safety concern, changing the configuration created the possibility of an accident of a different type than any previously analyzed in the UFSAR which requires a license change.

As described in the meeting summary (Reference 6), GPU Nuclear met with the NRC on July 13, 1999 to discuss the issue of a license change to resolve the NOV in Inspection Report 98-09 along with another separate issue involving proposed procedure changes for another system. In the meeting GPU Nuclear proposed to 1) establish Limiting Condition for Operation (LCO) limits for MUT pressure and level based on a more detailed model that was under development at that time along with an appropriate action statement and allowable outage time (AOT), 2) define the design and licensing basis with emphasis on the single failure criterion, 3) address the instrumentation for pressure and level measurement including their maintenance and calibration, 4) provide the technical basis for the pressure/level limits. This LCA fulfills that commitment.

B. Benefits of Operation with MU/HPI Cross-Connect Valves Open

The following lists some of the benefits of the change to maintain the MU/HPI pump suction cross connect valves (MU-V-69A and MU-V-69B) open:

1. Concerns associated with maintaining an isolated MU/HPI pump suction header filled and vented are resolved. Maintaining cross-connect valves (MU-V-69A and MU-V-69B) open:

    a. Provides greater assurance that the MU/HPI pump MU-P-1C suction piping remains filled and vented at all times,

    b. Precludes damage to MU/HPI pump MU-P-1C if it were inadvertently started during operation or testing without establishing a suction path from the MUT or the BWST,

c. Reduces the potential for damage to Makeup Pumps MU-P-1A & MU-P-1B due to a failure of MU-V-14A to open on emergency safeguards (ES) actuation, and

d. Reduces the probability of MU/HPI pump damage due to improper valve operations during testing.

2. Resolves concerns associated with over-pressurization of isolated MU/HPI pump suction piping and components during normal or emergency operation. The change eliminates the potential to over-pressurize the MU/HPI pump suction piping due to leakage through recirculation line check valves or other leakage paths on the pump discharge. With a common suction header, any flow back through an idle pump will be picked up by the operating pump without any significant pressure increase at the pump suction. This change resolves over-pressurization concerns during normal or emergency operating as identified in LER 97-03 (Reference 15).

3. Results in a lower calculated core damage frequency (CDF) due to a reduction in the probability of Makeup Pump damage and the resulting increase in MU/HPI System availability. This was the conclusion of the Probabilistic Risk Assessment (PRA).

C. MUT Level and Pressure Limits

Analysis was performed to determine the operating limits for the pressure and level in the makeup tank (MU-T-1). These limits are proposed to protect the HPI pumps by assuring adequate NPSH and precluding gas entrainment of the pumps from the MUT during any design basis accident if the MUT conditions are maintained within these limits. The curves in Figure 3.3.1 for MUT pressure and level are based on analysis (Reference 7) of the full spectrum of RCS breaks including an HPI line break. The analysis used conservative assumptions based on limiting conditions for operation and maintenance. The system valve lineup is based on TMI-1 operating procedure 1104-2, Revision 116, "MakeUp and Purification System." The system lineup includes a common MU pump suction header (MU-V-68A/B and MU-V-69A/B "OPEN"), isolation between HPI trains on the MU pump discharge header (MU-V-76A/B or 77A/B "CLOSED"), and MU-V-222 throttled.

The analysis inputs included: minimum initial BWST level, maximum BWST level instrument error, un-throttled flow rates of reactor building spray (BS) and LPI from the BWST for events where these systems may be operating, no delay in procedure directed operator actions which might aggravate the potential threat to the HPI pumps, no additions to the MUT are credited (including letdown or seal return and excluding MU pump recirculation flow), minimum or maximum valve stroke times based on IST limits, and no operator actions in response to the decrease in MUT inventory. The analysis conservatively assumed a three minute delay to initiate HPI, even though the LOCA analysis for an HPI line break shows that HPI will be actuated at approximately 75 seconds. The analysis for potential gas entrainment allowed margin to account for the potential formation of a vortex in the MUT, which could lead to air entrainment prior to emptying the tank.

The analysis considered the event specific limiting single active failure for potential gas entrainment. The failure of a MU pump suction isolation valve from the BWST (MU-V-14A or MU-V-14B) to open on ES actuation and all other available HPI pumps

(3 MU pumps) operating was determined to be the most limiting scenario for potential gas entrainment.

The Abnormal Transient Procedure 1210-1, "Reactor Trip," includes direction to start a second MU/HPI pump after the reactor trips to minimize the pressurizer level decrease due to RCS cooldown. The NPSH limit will protect the running MU pump and a second MU pump (HPI selected) if started prior to ES actuation. Absent this procedure, the NPSH limit is not required to protect any ECCS equipment. The normally running MU pump is not required for the system to meet its ECCS performance requirements including consideration of a single active failure.

The plant operating limits will include margins to account for instrument error. The overall loop instrument errors were determined (References 8 and 9) assuming a 30 month interval between calibration checks. The operating procedure (Reference 10) specifies a normal operating band that is more restrictive than the limits from the analysis including maximum instrument errors. If the MUT conditions are outside of the normal operating band, a plant process computer alarm will annunciate. If the MUT conditions moved further outside of the normal band, there are overhead annunciators (MAP D-3-2 and D-3-3) and additional plant process computer alarms if the error adjusted T.S. limit is approached. If the error adjusted T.S. limit is exceeded an additional plant process computer alarm will be activated.

Experience with the present operating limits and the presence of multiple methods to adjust MUT conditions makes it unlikely that the T.S. limit would be exceeded. In the unlikely event that the MUT level and pressure were outside the T.S. curves, the level would be restored within 4 hours or a plant shutdown would be required in accordance with T.S. 3.0.1. The 4 hour Allowable Outage Time (AOT) is conservative compared with the AOTs for other equipment where operability is credited in the initial conditions to preclude damage if a LOCA were to occur (e.g. for control rod position limits, TS 3.5.2.5 allows 24 hours). The AOT for MUT level and pressure limits is based on the ability to recover MUT conditions within a short time period.

The T.S. Figure 3.3.1 does not include the instrument errors. The plant operating limits, as implemented in alarms and procedures, will include margins to account for instrument error. The instrument errors were not included in the T.S. to allow alternative instruments to be used to meet the T.S., provided that appropriate margins are included to account for instrument error.

D. MUT Level & Pressure Instruments

MUT level indication design ensures that there is no credible common mode failure mechanism. There are redundant MUT level indicators available in the control room. There is a recorder (MU14-LR) and a digital indicator (MU-LT-778A). These instruments are independently powered from vital power. Both instrument loops are indicated and recorded on the plant process computer. The high pressure sensing line comes from a common level tap on the side of the tank (see Figure 1). The instruments are calibrated such that when the level is at the lower tap, the indicated level is zero. The low pressure sensing line comes from a single vent line on the top of the tank. The sensing line connection to each transmitter is routed to a drain pot. Any condensation in the sensing

line is collected below the transmitter and does not effect the level indication. The daily operability check will be performed by comparing the two control room indications.

There is an indicator (MU17-PI) for MUT gas pressure in the control room. This instrument loop is powered from vital power. MUT pressure indication from this instrument loop is indicated, recorded and alarmed on the plant process computer. The daily operability check will be performed by comparing the control room indication with the local indications of MU pump suction header pressure (MU-PI-412, 413, or 414).

The MUT level and pressure instruments are used to maintain MUT conditions within the acceptable region. If MUT conditions are within the acceptable limits when a LOCA occurs, then the MU pump NPSH will remain adequate throughout the transient and the MUT gas overpressure will not be drawn into the MU pumps without any additional mitigating actions by the operator.

MUT pressure and level instruments are maintained in accordance with the GPUN Appendix B QA program. MUT level is categorized by Regulatory Guide (RG) 1.97 as a Type D, Category 2 instrument. The TMI-1 MUT level instruments meet the requirements for a Category 2 instrument. MUT pressure is not identified as a RG 1.97 parameter. The transmitters for MUT pressure and level are classified as nuclear safety related in the TMI-1 Quality Classification List.

An overall instrument loop error analysis was performed for each MUT instrument loop (References 8 and 9). The analysis considered the hardware installed, calibration methodology, accuracy of the test equipment, effects on electronics from variations in power supplies and ambient temperatures, systematic measurement errors (elevation of the transmitter, water temperature variation, boron concentration variation), indicator resolution and loss of accuracy over time (i.e., drift). The analysis assumed a 30 month period between calibrations to determine the overall loop accuracy and to determine the acceptable "AS FOUND" tolerances. NRC GL 91-04, "Changes in Technical Specification Intervals to Accommodate A 24-month Fuel Cycle," dated April 2, 1991 identifies the issues that should be addressed to provide an acceptable basis for increasing the calibration interval for instruments that are used to perform a safety function. These issues are addressed in Enclosure 1A.

E. <u>HPI & LPI Flow Instrument Surveillance Frequency</u>

The performance requirements for the HPI and LPI flow instruments are supported by the conclusions of the baseline calibration and instrument accuracy analysis (Reference 12 and 13 respectively). These analyses assumed a 30 month interval between calibration checks when determining overall loop accuracy. The instrument design basis functions and instrument accuracy requirements for the HPI and LPI flow instruments are addressed in references 16 and 17.

T.S. Table 4.1-1, Item No. 29 provides the calibration frequency requirement for HPI and LPI flow instruments. Prior to TMI-1 T.S. Amendment No. 175, the HPI and LPI flow instruments were calibrated each refueling interval. In Amendment No. 175, which approved 24 month operating cycles, the calibration frequency for the HPI and LPI flow instruments was revised to "F" (not to exceed 24 months) since the analysis had not been completed to support a 30 month interval between calibration checks. That analysis has

now been completed. Revision of the calibration frequency to "R, Refueling Interval (once per 24 months)" is needed to permit coordination of the instrument calibrations with biennially scheduled train outages. The 25% extension described in Tech Spec 1.25 would not permit extension of the surveillance interval beyond 30 months.

NRC GL 91-04, "Changes in Technical Specification Intervals to Accommodate A 24-month Fuel Cycle," dated April 2, 1991 identifies the issues that should be addressed to provide an acceptable basis for increasing the calibration interval for instruments that are used to perform a safety function. These issues are addressed in Enclosure 1A.

F. Editorial Changes

The editorial changes described in Section II above are clarifying in nature to improve the consistency and readability of this T.S. section.

IV. No Significant Hazards Consideration

GPU Nuclear has determined that this LCA involves no significant hazards consideration as defined by NRC in 10 CFR 50.92:

A. The proposed changes do not represent a significant increase in the probability or consequences of an accident previously evaluated.

The changes included in this LCA impose new requirements for MU/HPI system operation and testing and extension of calibration frequencies for the MUT level, HPI flow and LPI flow instruments. These changes could not result in initiation of any accident previously evaluated. Therefore, the probability of an accident could not be affected by changes to the MU/HPI system.

As described in the list of benefits for operation with MU/HPI cross-connect valves open, listed in Section III.B above, the purpose of changing the operation of the MU/HPI system was to preclude the possibility of HPI pump damage. The addition of surveillance requirements for the MUT pressure instrument and the addition of LCO limits on MUT level and pressure along with an appropriate action statement and AOT will ensure that gas entrainment of the MUT does not occur. The proposed change in instrument calibration frequencies will continue to maintain the required accuracy of the MUT level, HPI flow, and LPI flow instruments.

Minor editorial changes are included in this request to improve the clarity and readability of the T.S. and could not adversely affect plant operation.

Therefore, the proposed changes will not adversely impact the reliability of the MU/HPI system and could not represent a significant increase in the probability or consequences of an accident previously evaluated.

B. The proposed changes do not create the possibility of a new or different kind of accident from any accident previously evaluated.

This LCA does not involve the addition of any new hardware. Along with minor editorial changes, the requested changes involve MU/HPI system operation and testing, which could only affect RCS coolant inventory changes during operation and the ability to provide protection in the event of a Loss of Coolant Accident (LOCA). The full spectrum of LOCAs has been evaluated in the FSAR. Therefore, no new accident scenarios have been created.

The additional controls on MUT level and pressure provided by this LCA will ensure that a malfunction of a different type, gas entrainment of the MU/HPI pumps, will not occur. These limits on MUT level and pressure ensure that the initial conditions assumed for ECCS operation are maintained. The T.S. limits maintain the accident analysis initial conditions such that no operator action is required to meet NPSH or to avoid gas entrainment during ECCS operation with the postulated single failure as required by the TMI-1 licensing basis (Reference 14).

Extension of the calibration frequencies for the HPI level, HPI flow, and LPI flow will continue to maintain the accuracy of these instruments and could not create the potential

for any new accident that has not been evaluated.

Minor editorial changes are included in this request to improve the clarity and readability of the T.S. and could not adversely affect plant operation.

Therefore, these changes do not create the potential for any accident different from those that have been evaluated.

C. These proposed changes do not involve a significant reduction in a margin of safety.

This LCA includes changes to MU/HPI system operation and testing and an extension of the calibration frequency for certain instrument. The requested changes will serve to maintain the proper system initial conditions to ensure the ability of the MU/HPI system to provide protection in the event of a Loss of Coolant Accident (LOCA) and maintain the required instrument accuracy for the instruments where changes to a refueling interval frequency are being requested. NRC guidance for addressing the effect on increased surveillance intervals on instrument drift and safety analysis assumptions presented in GL 91-04 has been addressed in enclosure 1A above.

Minor editorial changes are included in this request to improve the clarity and readability of the T.S. and could not adversely affect plant operation.

These changes, which are consistent with the TMI-1 licensing and design basis requirements, do not result in a degradation of safety related equipment, and therefore, do not involve a significant reduction in a margin of safety.

V. Environmental Impact Evaluation

10 CFR51.22(c)(9) provides criteria for identification of licensing and regulatory actions eligible for categorical exclusion from performing an environmental assessment. A proposed amendment to an operating license for a facility requires no environmental assessment if operation of the facility in accordance with the proposed amendment would not:

(i) involve a significant hazards consideration,

(ii) result in a significant change in the types or significant increase in the amounts of any effluents that may be released offsite, and

(iii) result in a significant increase in individual or cumulative occupational radiation exposure.

GPU Nuclear has reviewed this LCA and concludes that it meets the eligibility criteria for categorical exclusion set forth in 10 CFR 51.22(c)(9). Pursuant to 10 CFR 51.22(c), no environmental impact statement or environmental assessment needs to be prepared in connection with the issuance of the proposed license amendment for changes which, along with some editorial changes, provides additional operating restrictions on MUT level and pressure, provides an additional surveillance requirement for the MUT pressure instrument, and revises an existing surveillance calibration frequency for the MUT level instrument.

VI. Implementation

GPU Nuclear, Inc. requests that the amendment authorizing this change be effective immediately.

VII. References

1. GPU Nuclear letter (1920-98-20519) dated September 18, 1997, LER 98-09, Revision 1, "Potential Loss of High Pressure Injection During Postulated Loss of Coolant Accident Due to Misapplication or Interpretation of Design Inputs."
2. NRC letter (1920-98-30622) dated October 15, 1998, "NRC Inspection Report No 50-289/98-06 and Notice of Violation."
3. GPU Nuclear letter (1920-98-20654) dated November 12, 1998, "Reply to Notice of Violation."
4. GPU Nuclear letter (1920-98-20716) dated December 24, 1998, "Reply to Notice of Violation Dated October 15, 1998 – Supplement."
5. NRC letter (1920-99-30162) dated March 26, 1999, "NRC Inspection No. 50-289/98-06 (Reply)."
6. NRC letter (1920-99-30452) dated August 4, 1999, "Summary of July 13, 1999 Meeting with GPU Nuclear, Inc. Regarding Proposed Modifications to Reactor Building Spray and High Pressure Injection at TMI-1 (TAC Nos. MA5934 and MA5935)."
7. GPU Nuclear Calculation No. C-1101-211-E610-066, Revision 3, "MU Tank Pressure and Level Limits."
8. GPU Nuclear Calculation No. C-1101-624-5350-002, Revision 5, "MU Tank Level Loop Error & Baseline Calibration."
9. GPU Nuclear Calculation No. C-1101-624-E510-008, Revision 0, "MU Tank Pressure Loop Error."
10. TMI-1 Operating Procedure 1104-2, Revision 116, "MakeUp and Purification System."
11. Drawing No. 308-905, Revision 4, "Makeup Tank Level and Pressure Transmitter."
12. GPU Nuclear Calculation No. C-1101-211-E510-082 "HPI Flow Calibration and Instrument Loop Error."
13. GPU Nuclear Calculation No. C-1101-212-E510-074, "LPI/DHR Flow Calibration and Instrument Loop Error"
14. GPU Nuclear Safety Evaluation No. SE-000211-015, Revision 0, "Operation with MU X-Connect Valves OPEN."
15. GPU Nuclear dated September 29, 1997, LER 97-03, Revision 1, "Potential Overpressurization Of Makeup Pump Suction Piping Due To Inadequate Test And Operating Procedures."
16. GPU Nuclear Safety Evaluation No. SE-000211-027, Revision 0, "HPI Flow Instrument Design Basis."
17. GPU Nuclear Safety Evaluation No. SE-000212-036, Revision 0, "LPI Flow Instrument Design Basis."
18. TMI-1 Surveillance Procedure 1302-5.17, "Make-Up Tank Level Instrumentation."
19. TMI-1 Surveillance Procedure 1302-5.18, "HPI/LPI Flow Channel Calibration."
20. TMI-1 Surveillance Procedure 1301-1, "Shift and Daily Checks."

FIGURE 1
MU TANK PRESSURE & LEVEL INSTRUMENTS

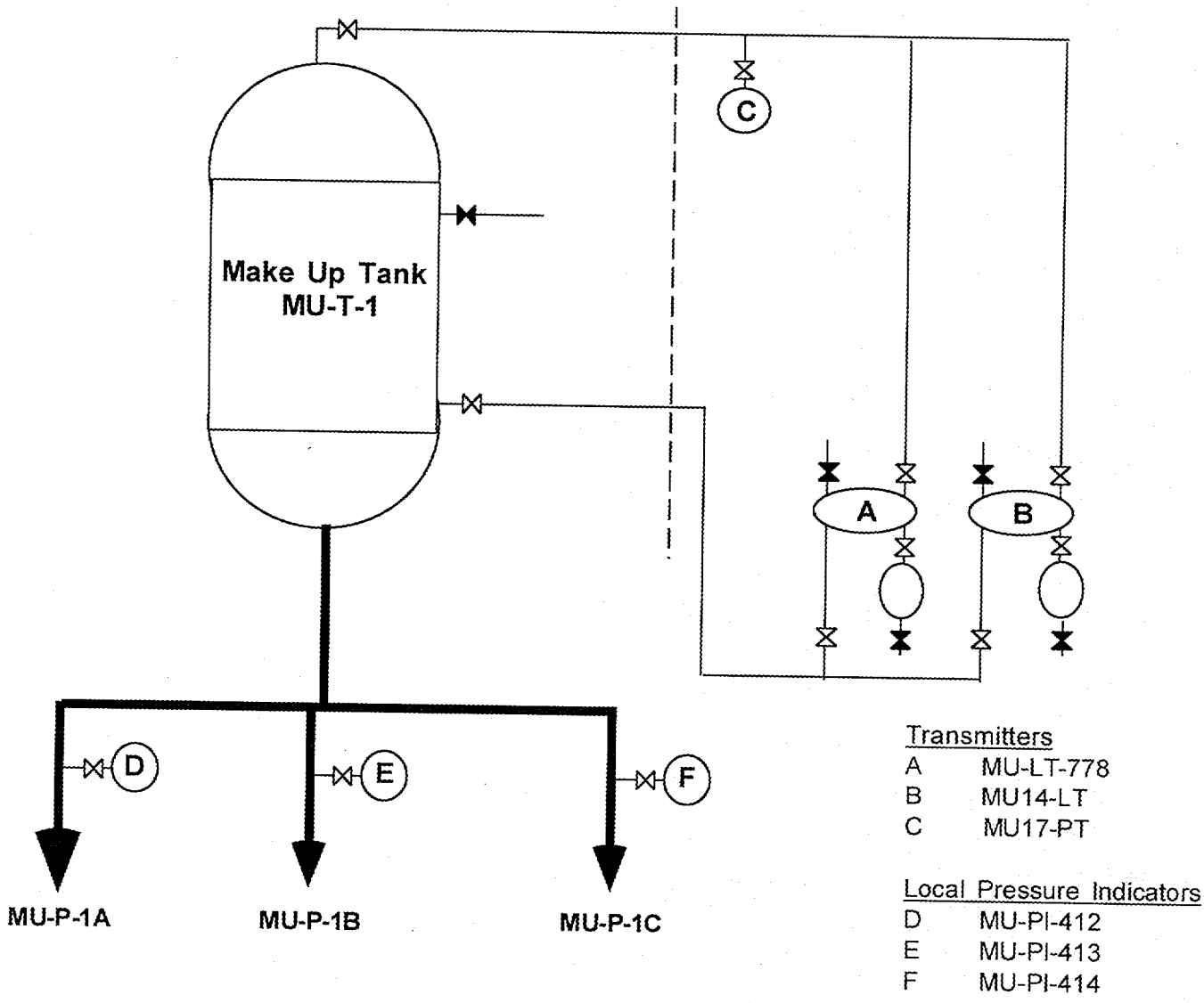

Enclosure 1A

Evaluation of Instrument Surveillance Frequency Changes as Described In Generic Letter 91-04

Generic Letter 91-04, Enclosure 2, "Guidance for Addressing the Effect of Increased Surveillance Intervals on Instrument Drift and Safety Analysis Assumptions," identified the issues to be addressed to provide an acceptable basis for increasing the calibration interval for instruments that are used to perform safety functions. Each of seven issues that were identified are addressed as follows:

1. Confirm that instrument drift as determined by as-found and as-left calibration data from surveillance and maintenance records has not, except on rare occasions, exceeded acceptable limits for a calibration interval.

   Response
   The history of instrument performance for the MUT level, HPI Flow, and LPI Flow instruments has been reviewed. There were occasions where the instrument calibration was found outside of the tolerance required by procedure, however no incidents were identified where drift or time dependent variability resulted in the instrument being inoperable.

2. Confirm that the values of drift for each instrument type (make, model, and range) and application have been determined with a high probability and a high degree of confidence. Provide a summary of the methodology and assumptions used to determine the rate of instrument drift with time based upon historical plant calibration data.

   Response
   The historical data for instrument drift of the MU tank level, HPI Flow & LPI Flow instruments were compared with the published manufacturer specifications. In each case the historical data were similar to or better than the published rate of drift. The manufacturer's published rate of drift for 95% statistical confidence was used in the determination of the overall loop accuracy.

3. Confirm that the magnitude of instrument drift has been determined with a high probability and a high degree of confidence for a bounding calibration interval of 30 months for each instrument type (make, model number, and range) and application that performs a safety function. Provide a list of the channels by TS section that identifies these instrument applications.

   Response
   Overall loop accuracy for each instrument loop (MU14-LT, MU-LT-778, DH-DPT-0802, DH-DPT-0803, MU-FT-1126, MU-FT-1127, MU-FT-1128 and MU-FT-1129) was determined based upon a 30 month period between surveillance checks. The overall loop error was determined based upon a maximum "AS LEFT" error and drift for 30 months. The safety analyses that are dependent upon these instruments used bounding values or have been revised using the overall loop errors based upon a 30 month interval. These instruments are required to be calibrated in accordance with T.S. Table 4.1-1, Items 27 and 29; however there are no explicit operability requirements in T.S., Section 3 for any of these instrument loops.

4. Confirm that a comparison of the projected instrument drift errors has been made with the values of drift used in the setpoint analysis. If this results in revised setpoints to accommodate larger drift errors, provide proposed TS changes to update trip setpoints. If the drift errors result in a revised safety analysis to support existing setpoints, provide a summary of the updated analysis conclusions to confirm that safety limits and safety analysis assumptions are not exceeded.

Response

MUT Level:
The MUT level instrument is used to maintain the conditions in the MUT in order to preclude potential MU pump NPSH or gas entrainment problems as described in this LCA. The MUT level instrument also provides a primary indication of RCS leakage both as an early indicator of significant leaks which are within the MU system capability and for detection of very small leaks. In each of these functions the MUT instrument is used as a relative measurement, where the absolute level measurement is not critical. The surveillance interval extension does not affect the instrument error assumptions in the existing analysis.

HPI Flow:
The accuracy requirements for the HPI flow instruments are based on the need for the operator to throttle HPI flow to prevent pump runout in a specific LOCA scenario as described in reference 16. The Emergency Operating Procedure (EOP) direction that "HPI must be throttled to prevent pump runout (515 gpm/pump)" is based on the instrument accuracy at the end of 30 months.

LPI Flow:
The accuracy requirements for the LPI flow instruments are based on the need for the operator to throttle LPI flow to maintain adequate pump NPSH when taking suction from the Reactor Building (RB) sump as described in reference 17. All other safety analyses that account for LPI flow (LOCA analysis, EQ/Long term cooling, MHA dose consequence, etc.) have been reviewed and revised as required based on the revised instrument accuracy at 30 months.

No Tech Spec setpoints or margins for setpoints in TS are affected by these surveillance extensions.

5. Confirm that the projected instrument errors caused by drift are acceptable for control of plant parameters to effect a safe shutdown with the associated instrumentation.

Response
As discussed in item No. 4 above, the critical instrument accuracy requirements for LPI flow and HPI flow are based on post accident control functions. The MUT level instruments do not have a required post accident control function.

6. Confirm that all conditions and assumptions of the setpoint and safety analyses have been checked and are appropriately reflected in the acceptance criteria of plant surveillance procedures for channel checks, channel functional tests, and channel calibrations.

Response
The overall instrument loop accuracy was determined based on the "AS LEFT" tolerance requirements in the surveillance procedure. The surveillance procedure "AS FOUND" tolerance is based on the same methodology used to determine the "OVERALL" loop accuracy. The consistency between the instrument accuracy analysis (References 8, 12, and 13), and the surveillance procedures (References 18 and 19) has been verified. The criteria for the operability checks for MUT level (Reference 20) are consistent with the overall loop accuracy required.

7. Provide a summary description of the program for monitoring and assessing the effects of increased calibration surveillance intervals on instrument drift and its effect on safety.

   Response
   The instrument surveillance program triggers evaluations of the instrument performance whenever the instrument is found outside the "AS LEFT" tolerance (i.e., anytime an adjustment is required). The maintenance assessment program records these events and repetitive occurrences are identified for further evaluation. These evaluations include consideration of the instrument function and its effect on safety.