Indian Point 3
Nuclear Power Plant
P.O. Box 215
Buchanan, New York 10511
914 736 8000

New York Power Authority

CONSOLIDATED EDISON COMPANY
OF NEW YORK, INC.
INDIAN POINT STATION
BROADWAY & BLEAKLEY AVENUE
BUCHANAN, NY 10511

October 27, 1999
IPN-99-117

Docket Numbers 50-03, 50-247, and 50-286
Indian Point 1, 2, and 3
License Numbers DPR-5, DPR-26, and DPR-64

U. S. Nuclear Regulatory Commission
Attn: Document Control Desk
Washington, DC 20555

SUBJECT: **Submittal of Changes to the Indian Point State Pollutant Discharge Elimination System (SPDES) Permit**

Reference 1: New York State Department of Environmental Conservation, Division of Environmental Permits, Region 3 Letter to New York Power Authority (NYPA), dated September 28, 1999.

Enclosed are changes to the Indian Point SPDES permit. Indian Point Technical Specifications, Appendix B, Section 3.2. require reporting SPDES changes within thirty days of approval. The SPDES permit changes were approved by the New York State Department of Environmental Conservation in Reference 1, on September 28, 1999.

The current SPDES permit consists of 19 pages. The SPDES permit was modified as follows:

1) On page 5, Outfall 001E monitoring requirements are reduced to flow only.

2) On page 6, Outfall 01K is identified as filter backwash.

3) On page 8, Footnote "e" is modified as follows:
   The calculated quantity of this substance in this discharge shall be determined by using the analytical results obtained from sampling that is to be performed on internal waste streams 01B, 01C, 01D, and 01L and releases from Unit 3's chemical batch tanks into 01J.

4) On page 9, Footnote "n" is modified as follows:
   One flow proportioned composite sample shall be obtained from one grab sample taken from each of the internal waste streams 01B, 01C, 01D, 01L and each release from the chemical batch tanks at Unit 3 into 01J.

5) On page 14, Revise schematic diagram.

C001

Attachment 1 to this letter is a copy of Reference 1 including the revised SPDES permit pages.

Indian Point is making no new commitments in this letter. Should you or your staff have any questions, please contact Mr. Don Mayer of the Indian Point Unit 3 staff at (914) 736-8401.

Very truly yours,

Robert J. Barrett
Site Executive Officer
Indian Point 3 Nuclear Power Plant

Very truly yours,

A. Alan Blind
Vice President, Nuclear Power
Consolidated Edison Company
Of New York, Inc.

Attachment

cc: See next page

cc: Mr. Hubert J. Miller
Regional Administrator
Region 1
U. S. Nuclear Regulatory Commission
475 Allendale Road
King of Prussia, Pennsylvania 19406-1415

Mr. George Wunder, Project Manager
Project Directorate I
Division of Reactor Projects I/II
U. S. Nuclear Regulatory Commission
Mail Stop 8 C4
Washington, D.C. 20555

Mr. Jefferey F. Harold, Project Manager
Project Directorate I-1
U. S. Nuclear Regulatory Commission
Mail Stop 14 B2
Washington, D. C. 20555

U. S. Nuclear Regulatory Commission
Resident Inspectors' Office
Indian Point 3 Nuclear Power Plant

U. S. Nuclear Regulatory Commission
Resident Inspectors' Office
Indian Point 2 Station
P.O. Box 38
Buchanan, New York 10511

Mr. Michael D. Merriman
Deputy Regional Permit Administrator
New York State Department of Environmental Conservation
Division of Environmental Permits
21 South Putt Corners Road
New Paltz, New York 12561-1696

Docket Numbers 50-03, 50-247, and 50-286
Indian Point 1, 2, and 3
License Numbers DPR-5, DPR-26, and DPR-64
IPN-99-117
Attachment 1

ATTACHMENT I

Copy of NYSDEC Letter, Dated September 28, 1999
PERMIT MODIFICATION

New York State Department of Environmental Conservation
Division of Environmental Permits, Region 3
21 South Putt Corners Road, New Paltz, New York 12561-1696
Phone: (914) 256-3032 FAX: (914) 255-3042

John P. Cahill
Commissioner

September 28, 1999

Mr. John M. Kahabka
Supervisor, Environmental Programs
New York Power Authority
123 Main Street
White Plains, NY 10601

SPDES number: NY 000 4472
Application number: 3-5522-00011/00008
(Please refer to this number in all your correspondence)

Permit Type: SPDES (Article 17 ECL)

Project Location: Indian Point Generating Station, Town of Cortland, Westchester County. Hudson River, river mile 42, east shore.

PERMIT MODIFICATION

Dear:

In accordance with your written request, dated April 15, 1999 and your written response regarding proposed changes to the draft revised permit dated August 31, 1999, the current 19 page permit is modified as follows:

Page 5 Outfall 001E monitoring requirements are reduced to flow only.

Page 6 Outfall 01k is identified as filter backwash.

Page 8 Footnote "e" is modified as follows:
The calculated quantity of this substance in this discharge shall be determined by using the analytical results obtained from sampling that is to be performed on internal waste streams 01B, 01C, 01D and 01L and releases from Unit 3's chemical batch tanks into 01J.

Page 9 Footnote "n" is modified as follows:
One flow proportioned composite sample shall be obtained from one grab sample taken from each of the internal waste streams 01B, 01C, 01D, 01L and each release from the chemical batch tanks at Unit 3 into 01J.

Page 14 Revise schematic diagram.

Copies of the revised above pages are enclosed. You are to insert them into the facility permit. All other terms and conditions remain as written in the original permit.

If you have any questions, please contact Larry Wilson of my staff at (914) 256-3162.

Sincerely,

Michael D. Merriman

Michael D. Merriman
Deputy Permit Administrator

enc.: revised permit pages 5, 6, 8, 9 and 14

cc: J. Marcogliese
P. Kolakowski (3505)
W. Lavery (3504)
E. Radle (4756)
D. Dunning, NYPA w/enc.
J. Young, Consolidated Edison w/enc

91-20-2a (1/89)

SPDES No.: NY 000 4472

Part 1, Page 5 of 13

Modified: 9-30-98

EFFLUENT LIMITATIONS AND MONITORING REQUIREMENTS

During the period beginning October 1, 1987
and lasting until October 1, 1992
the discharges from the permitted facility shall be limited and monitored by the permittee as specified below:

Outfall Number & Effluent Parameter	Discharge Limitations Daily Avg.	Daily Max.	Units	Minimum Monitoring Requirements Measurement Frequency	Sample Type
Sum of 01B, 01C, 01D & 01J, 01L					
Flow	Monitoring	Only	MGD	Weekly	Instantaneous
Boron	Monitoring	Only	mg/l	Weekly	Grab[n]
001C					
Flow	Monitoring	Only	MGD	Monthly	Instantaneous
001E					
Flow	Monitoring	Only	MGD	Weekly	Instantaneous
001G					
Flow	Monitoring	Only	MGD	Weekly	Instantaneous
Phosphates as P**	16	38	lbs/day	Monthly	Grab
001I					
Flow	Monitoring	Only	MGD	Footnote o	Footnote o
001J***					
Flow	Monitoring	Only	MGD	Weekly	Estimate
Oil & Grease		No visible oil or sheen	mg/l	Weekly	Visual Observation
Sum of 01C, 01D, 01K and 01L					
Oil & Grease		15	mg/l	Monthly	Grab[m]

***This applies to only those internal streams at Indian Point 2, which comprise this outfall.*

***Because this outfall cannot be monitored, the following shall apply:

1. All oil spills shall be handled under the SPCC plan.
2. Flow tributary to the floor drains shall not contain more than 15 mg/l of oil and grease nor any visible sheen.

EFFLUENT LIMITATIONS AND MONITORING REQUIREMENTS

During the period beginning October 1, 1987 and lasting until October 1, 1992 the discharges from the permitted facility shall be limited and monitored by the permittee as specified below:

Outfall Number & Effluent Parameter	Discharge Limitations Daily Avg.	Daily Max.	Units	Minimum Monitoring Requirements Measurement Frequency	Sample Type
01K - Filter Backwash					
Flow	Monitor	Monitor	GPD	Weekly	Instantaneous
001C					
Flow	Monitoring	Only	MGD	Monthly	Instantaneous
001L - Condensate Polisher System Effluent					
Flow	Monitor	Monitor	GPD	Weekly	Instantaneous
01N - Reverse Osmosis Reject					
Flow	Monitor	Monitor	GPD	Weekly	Instantaneous
Oil & Grease	NA	15	mg/l	Weekly	Grab
Total Suspended Solids	30	50	mg/l	Weekly	Grab
002-009 - Uncontaminated Stormwater Discharge					
No monitoring required					

Modified: 9-30-99

Footnotes

a. Discharge 001 shall occur only through the subsurface ports of the outfall structure.

b. When the temperature in the discharge canal exceeds 90°F or the site gross electric output equals or exceeds 600MW the head differential across the outfall structure shall be maintained at a minimum of 1.75 feet. When required, adjustment of the ports shall be made within four hours of any change in the flow rate of the circulating water pumps. IF compliance is not achieved, further adjustments of the ports shall be made to achieve compliance. The requirements of the Settlement Agreement flow schedules shall take priority over the requirements of this footnote.

c. The service water system may be chlorinated continuously. Should the condenser cooling water system be chlorinated, the maximum frequency of chlorination for the condensers of each unit shall be limited to two hours per day. The total time for chlorination of the three units for which this permit is issued shall not exceed nine hours per week. Chlorination shall take place during daylight hours and shall not occur at more than one unit at a time.

d. The calculated quantity of these substances in the discharge shall be determined by using the analytical results obtained from sampling that is to be performed on internal waste streams 01C and 01D.

e. The calculated quantity of this substance in this discharge shall be determined by using the analytical results obtained from sampling that is to be performed on internal waste streams 01B, 01C, 01D and 01L and releases from Unit 3's chemical batch tanks into 01J.

(Footnote f has been removed. Text has been placed in Additional Requirement #8.)

g. Arithmetic mean of the values for effluent samples collected over a 30 day period.

h. Arithmetic mean of the values for effluent samples collected over a 7 day period.

i. 30 day geometric mean.

j. 7 day geometric mean.

k. One flow proportioned composite sample shall be obtained from one grab sample taken from each of the internal waste streams 01B, 01C, 01D, 01E, 01G, and 01L

l. One flow proportioned composite sample shall be obtained form one grab sample taken from each of the internal waste streams 001C and 001D. Sampling is not required if use of chromium is discontinued.

m. One grab sample shall be obtained from each of the internal waste streams 001C, 001D, 001K and 001L and the samples shall be analyzed separately. The results shall be reported by computing the flow-weighted average.

n. One flow proportioned composite sample shall be obtained from one grab sample taken from each of the internal waste streams 01B, 01C, 01D, 01L and each release from the chemical batch tanks at Unit 3 into 01J.

o. *The flow of condenser cooling water discharges shall be monitored and recorded every eight hours by recording the operating mode of the circulating water pumps.* Any changes in the flow rate of each circulating water pump shall be recorded, including the date and time, and reported monthly together with the Discharge Reporting Form. The permittee shall indicate whether any circulating pumps were not in operation due to pump breakdown or required pump maintenance and the period(s) (dates and times) the discharge temperature limitation was exceeded, if at all. Methods, equipment, installation, and procedures shall conform to those prescribed in the Water Measurement Manual, U.S. Department of the Interior, Bureau of Reclamation, Washington D.C.: 1967 or equivalent approved by the permit issuing authority.

p. Effluent disinfection is required all year. If chlorine is used for disinfection, a chlorine residual of 0.5 - 3.0 (Range) shall be maintained in the chlorine contact chamber effluent.

q. Continuous monitoring of TRC during condenser chlorination is required. A continuous TRC monitor shall be installed by October 1, 1987 or the date condenser chlorination begins, whichever is later. Prior to installation of the continuous monitor or when the continuous monitor fails, is inaccurate, or is unreliable, TRC shall be monitored during condenser chlorination by analyzing grab samples taken at least once every 30 minutes during each chlorination period.

r. Grab samples shall be taken at least once daily during low level service water chlorination and at least once every 30 minutes during high level service water chlorination. During service water chlorination, Outfall 001 TRC concentrations may be determined by either direct measurement at Outfall 001 or by multiplying a measured TRC concentration in the service water system by the ratio of chlorinated service water flow to the total site flow.
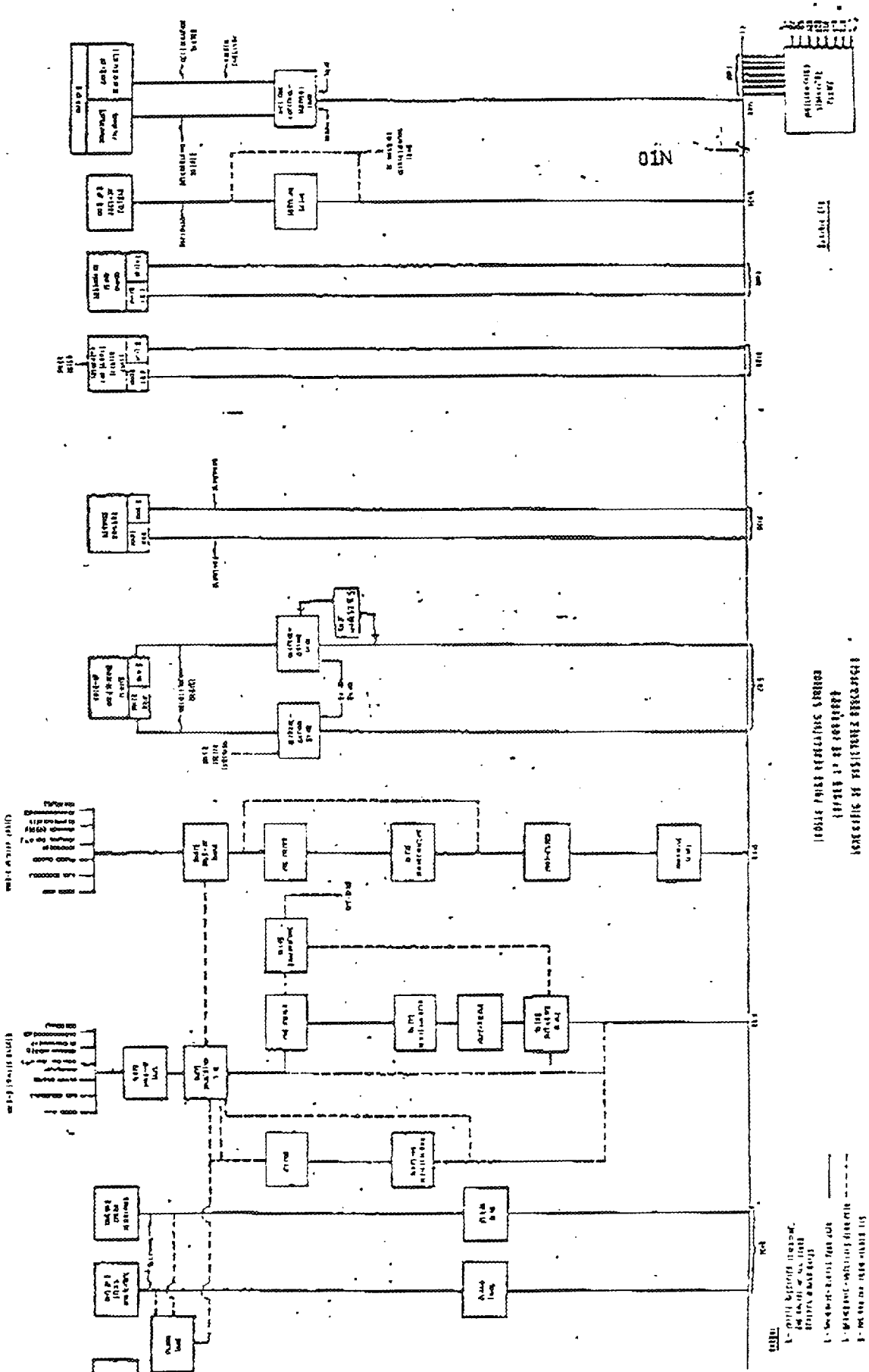
SPDES No.: NY 000 4472
Part 1, Page 14 of 19
Modified: 9-30-99 (MLM)